SPACE TRANSPORTATION SYSTEM HAER No. TX-116
Lyndon B. Johnson Space Center
Houston
Harris County
Texas

PHOTOGRAPHS

WRITTEN HISTORICAL AND DESCRIPTIVE DATA

Historic American Engineering Record
National Park Service
U.S. Department of the Interior
12795 W. Alameda Parkway
Denver, Colorado 80228-2838

HISTORIC AMERICAN ENGINEERING RECORD

SPACE TRANSPORTATION SYSTEM
HAER No. TX-116

Location: Lyndon B. Johnson Space Center
Houston
Harris County
Texas

Present Owner: Smithsonian Institution
Washington, DC

Present Use: Museum exhibit.

Significance: The Orbiter *Discovery*, OV-103, is considered eligible for listing in the National Register of Historic Places (NRHP) in the context of the U.S. Space Shuttle Program (1969-2011) under Criterion A in the areas of Space Exploration and Transportation and under Criterion C in the area of Engineering. Because it has achieved significance within the past fifty years, Criteria Consideration G applies. Under Criterion A, *Discovery* is significant as the oldest of the three extant orbiter vehicles constructed for the Space Shuttle Program (SSP), the longest running American space program to date; she was the third of five orbiters built by NASA. Unlike the Mercury, Gemini, and Apollo programs, the SSP's emphasis was on cost effectiveness and reusability, and eventually the construction of a space station. Including her maiden voyage (launched August 30, 1984), *Discovery* flew to space thirty-nine times, more than any of the other four orbiters; she was also the first orbiter to fly twenty missions. She had the honor of being chosen as the Return to Flight vehicle after both the *Challenger* and *Columbia* accidents. *Discovery* was the first shuttle to fly with the redesigned SRBs, a result of the *Challenger* accident, and the first shuttle to fly with the Phase II and Block I SSME. *Discovery* also carried the Hubble Space Telescope to orbit and performed two of the five servicing missions to the observatory. She flew the first and last dedicated Department of Defense (DoD) missions, as well as the first unclassified defense-related mission. In addition, *Discovery* was vital to the construction of the International Space Station (ISS); she flew thirteen of the thirty-seven total missions flown to the station by a U.S. Space Shuttle. She was the first orbiter to dock to the ISS, and the first to perform an exchange of a resident crew.

Under Criterion C, *Discovery* is significant as a feat of engineering. According to Wayne Hale, a flight director from Johnson Space Center, the Space Shuttle orbiter represents a "huge technological leap from

expendable rockets and capsules to a reusable, winged, hypersonic, cargo-carrying spacecraft." Although her base structure followed a conventional aircraft design, she used advanced materials that both minimized her weight for cargo-carrying purposes and featured low thermal expansion ratios, which provided a stable base for her Thermal Protection System (TPS) materials. The Space Shuttle orbiter also featured the first reusable TPS; all previous spaceflight vehicles had a single-use, ablative heat shield. Other notable engineering achievements of the orbiter included the first reusable orbital propulsion system, and the first two-fault-tolerant Integrated Avionics System. As Hale stated, the Space Shuttle remains "the largest, fastest, winged hypersonic aircraft in history," having regularly flown at twenty-five times the speed of sound.

Report Prepared by: Joan Deming, Principal Investigator
Patricia Slovinac, Architectural Historian
Archaeological Consultants, Inc. (ACI)
8110 Blaikie Court, Suite A
Sarasota, Florida 34240

Date: November 2012

Project Information: Archaeological Consultants, Inc. (ACI), under contract to Innovative Health Applications (IHA; now InoMedic Health Applications, still IHA), and in accordance with NASA Lyndon B. Johnson Space Center's (JSC's) Memorandum of Agreement for the Retirement of the Space Transportation System (STS) from service, dated September 29, 2011. The documentation package, as a whole, includes an overview of the Space Shuttle Program, as well as the development of the Space Transportation System. Per the Memorandum of Agreement, *Discovery* (OV-103) is considered the "shuttle of record," and is therefore the focus of this documentation package. A technological history of *Discovery*, a physical description of her structure and system, as well as her missions and milestones, is included. Where appropriate, the engineering uniqueness of *Atlantis* (OV-104) and *Endeavour* (OV-105) are discussed in relation to *Discovery*. Also included in the documentation package is a historical discussion and description of the other components of the Space Transportation System: the space shuttle main engines (SSMEs), the external tank (ET), and the solid rocket boosters/reusable solid rocket motors (SRBs/RSRMs).

The field team for black and white photograph efforts consisted of photographers Jeffrey Wolfe, Adam Nehr, and Tom Farrar, all from

QinetiQ North America, and architectural historian, Patricia Slovinac (ACI). The negatives were processed by the photography lab at JSC.

Research was conducted at JSC and the archives at the University of Houston-Clear Lake, John F. Kennedy Space Center (KSC) and George C. Marshall Space Flight Center (MSFC) by principal investigator, Joan Deming (ACI), and Ms. Slovinac. Additional information for the written narrative was gathered through formal interviews with current NASA and contractor personnel, which were conducted by Dr. Jennifer Ross-Nazzal and Ms. Rebecca Wright, of DB Consulting Group, Inc, in Houston, Texas. Assistance with research and the completion of the written historical and descriptive data was provided by numerous people, as noted in the acknowledgements. The written narrative was prepared by Ms. Deming and Ms. Slovinac, with contributions by Architectural Historian Christopher Berger (ACI).

Measured drawings of *Discovery*, the SSME, the ET, and the SRBs/ RSRMs were completed by the National Park Service, HABS/HAER/ HALS program, Washington, D.C., under the leadership of Thomas M. Behrens, HAER Architect.

Acknowledgements: ACI is most appreciative of the assistance and generous cooperation provided by many individuals at the different NASA centers, including civil servants and contractors. Our most special thanks are extended to Perri E. Fox, JSC Transition Manager, Lead, STS Recordation Team, for organizing the documentation effort. We are also indebted to the entire STS Recordation Team, as follows:

- Headquarters: Jennifer Groman (NASA Federal Preservation Officer), Kathy Callister, John Emond, Tina Norwood, Heather Pizzamiglio, Valerie Vo;
- JSC: Barbara Severance, Kevin Templin, Sandra Tetley, Jill Lin, Peggy Wooten, Lynn Lefebre;
- KSC: Barbara Naylor, Nancy English
- MSFC: Ralph Allen, Jim Ellis;
- DRFC: Dan Morgan, Dara English;
- MAF: Francis Celino, Ernest Graham;
- SSC: Marco Giardino;
- DB Consulting Group, Inc.: Jennifer Ross-Nazzal;
- Futron Corporation: Jill Jahn, Nigel Clark;
- Ares Corporation: Catherine Kaminski; and
- IHA: Shannah Trout.

In addition to providing valuable information to ACI throughout the production of this documentation package, the members of the STS Recordation Team assisted in the scheduling of research trips to JSC, KSC, and MSFC, and coordinated meetings and interviews with key personnel. ACI would like to extend our gratitude to all of those who assisted us during the research trips, as follows:

- JSC: Kathleen Kaminski, Ron Bailey, John Casper, Hank Rotter, Elizabeth Johnson, Maura White;
- KSC: Denise Thaller, John Shaffer, Rob Stute, Stephanie Stilson, Foster Anthony, Donna Atkins, Tony Bartolone, Lynn Donovan, Steven Lewis, Elaine Liston, Douglass Lyons, Becky Thompson, Sandy Van Hooser, Jeff Wheeler, Rita Willcoxon;
- MSFC: Dominic Amatore, Mike Wright, Mike Allen, Mike Vanhooser, Linda Posey, Molly Porter, Roena Love, Tim Garner, Alan Grady, Brenda Sutherland, Jeffrey McCaleb, Anne Meinhold, Steve Glover, Dan McCranie, Len Bell, Robert Moran, Larry Caddy, Chet Young, Richard Leonard, Bob Carmac;
- Boeing: Bill Roberts, William Musty, Robert Kahl, Alan Branscomb, Frank Manriquez;
- DB Consulting Group, Inc.: Rebecca Wright;
- USA: Caryn Antes, Jim Carleton, Joe Chaput, Mike Cosgrove, Ralph Esposito, Tom Ford, Don Fountain, Greg Henry, Randy Holcom, Phil Ketron, Lois Kroupa, Sue Kundid, Dick Lewis, Scott Lockwood, Charles Martin, Jim Wise, Barry Bowen;
- Pratt & Whitney Rocketdyne: Calvin D. (DeWayne) Collins, Don Ewers, Eric Gardze, Daniel Hausman, Joseph Sylvestro;
- ATK: Michael Bowen;
- University of Houston-Clear Lake Archives: Shelly Kelly, Regina (Jean) Grant;
- IHA: Jane Provancha, Joanne Creech, Wilson Timmons, Teresa King, Mark Mercadante;
- DP Associates: James Garner, Stephen Brooks;
- Futron: Cindy Ocel; and
- Dennis Jenkins.

ACI would also like to extend our thanks to the subject matter experts, aside from the STS Recordation Team, who read and provided review comments for the individual draft sections, as follows:

- JSC: Darren Fasbender, A. Foxwort (orbiter structure), Dave Gruber, Doug Haskovec (TPS), Rick Henfling (Booster), R.A.

Jarvis (ECLSS), Terry Keeler, Dean Lenort (OMS, RCS, orbiter structure), Mike Maher, Kevin McCluney (Landing/Deceleration, Mechanical, additional systems), Randy McDaniel, Rachel Murphy, David Pogue (additional systems), Kara Pohlkamp (ECLSS, DPS, GNC), Jon Reding, Christine Reichert (additional systems), Robert Schwank (DPS), Ken Smith (APU/Hydraulic), and Karen Walsemann (Export Control);

- KSC: Robin Ferebee (SRB);
- MSFC: Steven Wofford, Allen Blair, and Katherine P. Van Hooser (SSME); James Garner (ET); Jeffery McCaleb, Daniel P. Mellen, Chester E. Young, and Jack Hengel (SRB); and
- BFA Systems, Inc.: Alan L. Norwood (SRB).

In addition, ACI would like to express our gratitude to the following:

- Tom McCullough, Advisory Council on Historic Preservation;
- Richard O'Connor and Thomas M. Behrens, National Park Service, Washington, DC;
- Greg Kendrick and Christine Whiteacre, NPS Intermountain Region;
- Mark Wolfe, Linda Henderson, Stan Graves, Elizabeth Butman, and Kelly Little, Texas Historical Commission;
- Frank White and Elizabeth Brown, Alabama Historical Commission;
- Milford Wayne Donaldson and Mark Beason, Office of Historic Preservation, State of California; and
- Laura Kammerer, Florida Division of Historical Resources.

ACRONYMS AND ABBREVIATIONS

ACI	Archaeological Consultants, Inc.
ac	alternating current
ACO	Assembly and Checkout Officer
ACTS	Advanced Communications Technology Satellite
AETB	Alumina-Enhanced Thermal Barrier
AFB	Air Force Base
AFP	Air Force Plant
AFRSI	Advanced Flexible Reusable Surface Insulation
AHMS	Advanced Health Management System
AIAA	American Institute of Aeronautics and Astronautics
Al-Li	Aluminum-Lithium
ALTA	Aluminum Lithium Test Article
ALT	Approach and Landing Tests
AMPAC	American Pacific
APU	Auxiliary Power Unit
ASC	American Satellite Company
ASNBR	Asbestos-filled Nitrile Butadiene Rubber
ASRC	American Synthetic Rubber Company
ASRM	Advanced Solid Rocket Motor
ASSET	Aerothermodynamic/Elastic Structural Systems Environmental Tests
ATLAS	Atmospheric Laboratory for Applications and Science
BI	Booster Integration
BRI	Boeing Rigid Insulation
BFS	Backup Flight System
BSM	Booster Separation Motor
CAIB	*Columbia* Accident Investigation Board
CAPCOM	Spacecraft Communicator
CCAFS	Cape Canaveral Air Force Station
CCTV	Closed Circuit Television
CEI	Contract End Item Specification
CFC	Chlorofluorocarbon
COLBERT	Combined Operational Load Bearing External Resistance Treadmill
CRISTA	Cryogenic Infrared Spectrometer and Telescope
CRT	Cathode Ray Tube
CWS	Caution and Warning System
dc	direct current
DDT&E	Design, Development, Test and Evaluation
DFI	Developmental Flight Instrumentation
DFRC	Dryden Flight Research Center
DM	Development Motors

DMP	Down Mission Processing
DoD	Department of Defense
DPS	Data Processing System
ECLSS	Environmental Control and Life Support System
ECO	Engine Cutoff
EDO	Extended Duration Orbiter
EDT	Eastern Daylight Time
EECOM	Emergency, Environment, and Consumables Operations Manager
EGIL	Electrical Generation and Illumination Engineer
E&I	Electrical and Instrumentation
EM	Engineering Motor
EMU	Extravehicular Mobility Unit
EPA	Environmental Protection Agency
EPS	Electrical Power System
ESA	European Space Agency
ET	External Tank
ETCA	ET Intertank Carrier Plate Assembly
ETM	Engineering Test Motor
EURECA	European Retrievable Carrier
EVA	Extravehicular Activity
FAO	Flight Activities Officer
FDO	Flight Dynamics Officer
FIB	Fibrous (or Flexible) Insulation Blanket
FOD	Foreign Object Debris
FMOF	First Manned Orbital Flight
FM	Frequency Modulation
FPL	Full Power Level
FRCI	Flexible Refractory Composite Insulation
FRCS	Forward Reaction Control System
FRSI	Felt Reusable Surface Insulation
FSM	Flight Support Motor
FVM	Flight Verification Motor
FWC	Filament Wound Case
FY	Fiscal Year
g	gravity
GAO	General Accounting Office
GC	Ground Controller
GEI	Ground Environmental Instrumentation
GH2	Gaseous Hydrogen
GHe	Gaseous Helium
GN2	Gaseous Nitrogen
GNC	Guidance, Navigation, and Control

GO2	Gaseous Oxygen
GPC	General Purpose Computer
gpm	gallons per minute
GPS	Global Positioning System
GSE	Ground Support Equipment
GSTDN	Ground Space Flight Tracking and Data Network
GUCA	Ground Umbilical Carrier Assembly
GVT	Ground Vibration Tests
GVTA	Ground Vibration Test Article
H2	Hydrogen
HAL/S	High-order Assembly Language/Shuttle
HCFC	Hydrochlorofluorocarbon
HPM	High Performance Motor
HPU	Hydraulic Power Units
HRSI	High-temperature Reusable Surface Insulation
HSL	Hardware Simulation Laboratory
HST	Hubble Space Telescope
ICD	Interface Control Document
IEA	Integrated Electronic Assembly
IHA	InoMedic Health Applications (previously, Innovative Health Applications)
ILRV	Integral Launch and Reentry Vehicle
INCO	Instrumentation and Communications Officer
ISS	International Space Station
ISTB	Integrated Subsystem Test Bed
JSC	Johnson Space Center
KSC	Kennedy Space Center
KW	Kilowatt
LC	Launch Complex
LDEF	Long Duration Exposure Facility
LH2	Liquid Hydrogen
LITE	Lidar in Space Technology Experiment
LO2	Liquid Oxygen
LON	Launch on Need
LPS	Launch Processing System
LRSI	Low-Temperature Reusable Surface Insulation
LRU	Line Replacement Unit
LWT	Lightweight Tank
MA	Molded Ablators
MAF	Michoud Assembly Facility
MCC	Marshall Convergent Coating
MDD	Mate Demate Device
MDM	Multiplexer/Demultiplexer

MECO	Main Engine Cutoff
MEDS	Multifunction Electronic Display Subsystem
MET	Mission Elapsed Time
MLP	Mobile Launcher Platform
MMACS	Maintenance, Mechanical, Arm and Crew Systems Officer
MMH	Monomethylhydrazine
MOD	Mission Operations Directorate
MOL	Manned Orbiting Laboratory
mph	miles per hour
MPLM	Multi-Purpose Logistics Module
MPS	Main Propulsion System
MPT	Main Propulsion Test
MPTA	Main Propulsion Test Article
MPTA-ET	Main Propulsion Test Article External Tank
MRM	Mini-Research Module
MSBLS	Microwave Scanning Beam Landing System
MSC	Manned Spacecraft Center
MSFC	Marshall Space Flight Center
MTF	Mississippi Test Facility
MVGVT	Mated Vertical Ground Vibration Tests
N_2O_4	Nitrogen Tetroxide
NASA	National Aeronautics and Space Administration
NASM	National Air and Space Museum
NCFI	North Carolina Foam Insulation
NDE	Non-Destructive Evaluation
NPL	Nominal Power Level
NRHP	National Register of Historic Places
NSTL	National Space Technology Laboratories
O2	Oxygen
OAST	Office of Application and Space Technology
OBSS	Orbiter Boom Sensor System
ODS	Orbiter Docking System
OFT	Orbital Flight Test
OLF	Orbiter Lifting Frame
OMB	Office of Management and Budget
OMDP	Orbiter Maintenance Down Period
OMM	Orbiter Major Modification
OMS	Orbital Maneuvering System
OMSF	Office of Manned Space Flight
OPF	Orbiter Processing Facility
OV	Orbiter Vehicle
PAL	Protuberance Air Load

PAM-D	Payload Assist Module-Delta
PAO	Public Affairs Officer
PASS	Primary Avionics Software System
PBAN	Polybutadiene-Acrylic Acid-Acrylonitrile Terpolymer
PCS	Pressure Control System
PDL	Product Development Laboratory
PDRS	Payload Deployment and Retrieval Systems
PFC	Preliminary Flight Certification
PM	Phase Modulation
PMA	Pressurized Mating Adapters
POFI	Pour-On Foam Insulation
PRF	Parachute Refurbishment Facility
PRIME	Precision Recovery Including Maneuvering Entry
PRM	Production Rate Motor
PROP	Propulsion Officer
psi	pounds per square inch
psia	pounds per square inch, absolute
psig	pounds per square inch, gauge
PVM	Production Verification Motor
QM	Qualifications Motor
R	Rankine
RCC	Reinforced Carbon-Carbon
RCS	Reaction Control System
RFP	Request For Proposal
RGA	Rate Gyro Assembly
RMS	Remote Manipulator System
RPSF	Rotation Processing and Surge Facility
RSI	Reusable Surface Insulation
RSME	Replica Shuttle Main Engines
RSS	Range Safety System
RPL	Rated Power Level
rpm	revolutions per minute
RSRM	Reusable Solid Rocket Motor; Redesigned SRM
RTF	Return to Flight
RTV	Room-Temperature Vulcanizing
S&A	Safe and Arm
SAIL	Shuttle Avionics Integration Laboratory
SCA	Shuttle Aircraft Carrier
SEADS	Shuttle Entry Air Data System
SERV	Single-stage Earth-Orbital Reusable Vehicle
SFOC	Space Flight Operations Contract
SILTS	Shuttle Infrared Leeside Temperature Sensing

SIP	Strain Isolator Pad
SLA	Super Light Ablator
SLC	Space Launch Complex
SLF	Shuttle Landing Facility
SLWT	Super Lightweight Tank
SM	Servicing Mission
SOFI	Spray-On Foam Insulation
SOFIA	Stratospheric Observatory for Infrared Astronomy
SOW	Scope of Work
SPARTAN	Shuttle Pointed Autonomous Research Tool for Astronomy
SPAS	Shuttle Pallet Satellite
SPOC	Space Program Operations Contract
SRB	Solid Rocket Booster
SRB ARF	Solid Rocket Booster Assembly and Refurbishment Facility
SRM	Solid Rocket Motor
SSC	Stennis Space Center
SSFL	Santa Susana Field Laboratory
SSME	Space Shuttle Main Engine
SSMEPF	Shuttle Main Engine Processing Facility
SSP	Space Shuttle Program
SSPTS	Station to Station Power Transfer System
SSTG	Space Shuttle Task Group
STA	Structural Test Article
STAR	Space Transport and Recovery
START	Spacecraft Technology and Advanced Reentry Tests
STDN	Space Flight Tracking and Data Network
STG	Space Task Group
STS	Space Transportation System
SUMS	Shuttle Upper Atmospheric Mass Spectrometer
SWAR	Salt Water Activated Release
SWT	Standard Weight Tank
SYNCOM	Synchronous Communications Satellite
T&R	Transition and Retirement
TACAN	Tactical Air Navigation
TDRS	Tracking and Data Relay Satellite
TDRSS	Tracking and Data Relay Satellite System
TEM	Technical Evaluation Motors
TPS	Thermal Protection System
TPSF	Thermal Protection System Facility
TUFI	Toughened Uni-piece Fibrous Insulation
TVC	Thrust Vector Control
UHF	Ultra-High Frequency
U.S.	United States

USA	United Space Alliance
USBI	United Space Boosters, Inc.
VAB	Vehicle Assembly Building
VLS	Vandenberg Launch Site
WLE	Wing Leading Edge

GENERAL NOTES

Note 1, STS Mission Numbers: Throughout the text, the Shuttle mission numbering system follows the historical designations, whereby the missions were numbered sequentially, starting with STS-1, up through STS-9. A "new" numbering system was implemented in 1984 with STS-41B, to designate when (using the last digit of the fiscal year) and where (1 for Kennedy Space Center and 2 for Vandenburg Air Force Base) a given Shuttle mission was scheduled to launch, plus its sequential position in the launch schedule (A=1, B=2, etc.). In the aftermath of the *Challenger* accident (STS-51L) in 1986, the new numbering system was abandoned, as was the idea of launching from Vandenberg. Thus, NASA returned to numbering Shuttle missions sequentially, beginning with STS-26, the Return to Flight mission. For a variety of reasons, including weather delays and technical problems, Shuttle missions often did not fly in their correct numerical order.

Note 2, Force units/measurements: Three force units/measurements are used in this report, pounds per square inch (psi), pounds per square inch, absolute (psia), and pounds per square inch, gauge (psig). Pounds per square inch is a unit of pressure resulting from a force of one pound-force applied to an area of one square inch. The pounds per square inch, absolute, measurement includes atmospheric pressure, whereas pounds per square inch, gauge, excludes atmospheric pressure.

Part I. HISTORICAL CONTEXT

IA. Space Shuttle Program and the International Space Station

A "new era for the US Space Program" began on February 13, 1969, when President Richard Nixon established the Space Task Group (STG). The purpose of this committee was to conduct a study to recommend a future course for the US Space Program. The STG presented three alternative long-range space plans. All included an Earth–orbiting space station, a space shuttle, and a manned Mars expedition.[1] Three years later, on January 5, 1972, the Space Shuttle Program (SSP) was initiated in a speech delivered by President Nixon. During this address, Nixon outlined the end of the Apollo era and the future of a reusable space flight vehicle providing "routine access to space." By commencing work at this time, Nixon added, "we can have the Shuttle in manned flight by 1978 and operational a short time after that."[2] Ultimately, NASA's Space Transportation System (STS), as announced by President Nixon in 1972, was one shaped by the economic realities and politics of its time.

Early Visions and Concepts

The idea of a reusable space vehicle can be traced back to 1929 when Austrian aeronautical pioneer Dr. Eugen Sänger conceptualized the development of a two-stage spacecraft capable of launching into low-Earth orbit through the use of a large aircraft booster and returning to Earth.[3] While never built, Sänger's concept vehicle, the Silverbird, served as inspiration for future work.

Shortly after World War II, the Dornberger Project, carried out by Bell Aircraft Company, developed a two-stage piggy-back orbiter/booster concept.[4] In the 1950s, rocket scientist Dr. Wernher von Braun contributed to the concept of large reusable boosters. In a series of articles that appeared in *Colliers* magazine in 1952, he proposed a fully reusable space shuttle, along with a space station, as part of a manned mission to Mars.

The conceptual origins of NASA's space shuttle began in the mid-1950s, when the Department of Defense (DoD) began to explore the feasibility of a reusable launch vehicle in space. The primary use of the vehicle was for military operations including piloted reconnaissance, anti-

---

[1] NASA Headquarters, *Report of the Space Task Group* (Washington, DC: NASA History Office, 1969), http://www.hq.nasa.gov/office/pao/History/taskgrp.html.
[2] Marcus Lindroos, "President Nixon's 1972 Announcement on the Space Shuttle" (Washington, DC: NASA History Office), April 14, 2000, http://history.nasa.gov/stsnixon.htm.
[3] Dennis R. Jenkins, *Space Shuttle: The History of the National Space Transportation System, The First 100 Missions* (Cape Canaveral, FL: Specialty Press, 2001); Ray A. Williamson, "Developing the Space Shuttle," in *Exploring the Unknown: Selected Documents in the History of the US Civil Space Program, Volume IV: Accessing Space*, ed. John M. Logsdon (Washington, DC: US Printing Office, 1999), 161.
[4] David Baker, "Evolution of the Space Shuttle Part 1," *Spaceflight* 15, (June 1973): 202.

satellite interception, and weapons delivery. Various concepts were explored, and in November 1958, NASA joined with the US Air Force (USAF) on the X-20 Dynamic Soaring (Dyna-Soar) project. This concept envisioned a "delta-winged glider that would take one pilot to orbit, carry out a mission, and glide back to a runway landing," boosted into orbit atop a Titan II or III missile (Figure No. A-1). However, given limited available funds and the competing priorities of other programs, the Dyna-Soar program was cancelled in December 1963.[5]

After Secretary of Defense Robert McNamara announced cancellation of the Dyna-Soar program on December 10, 1963**,** conceptual planning of a reusable space shuttle began to "solidify."[6] By the mid-1960s, NASA and the DoD were considering a spacecraft capable of carrying payloads of 20,000 pounds or more into orbit and returning them to Earth. In 1964, NASA's Manned Spacecraft Center (MSC; renamed Lyndon B. Johnson Space Center [JSC] in 1973) issued a Request for Proposal (RFP) for the study of both lifting and ballistic vehicles as logistic support craft for space stations. While the ballistic vehicle concept proved to be a dead end, MSC selected the McDonnell Douglas Astronautics Company as the contractor for the lifting systems study. These unpowered aerodynamic maneuvering vehicles, designed for a horizontal land landing, offered more operations flexibility, notably in the cross-range capability.[7]

In the wake of the cancellation of the Dyna-Soar program, the USAF began the "umbrella" START (Spacecraft Technology and Advanced Reentry Tests) Program, formed to coordinate the range of Air Force efforts dealing with lifting reentry research and development. By January 1965, START encompassed both the PRIME (Precision Recovery Including Maneuvering Entry) and ASSET (Aerothermodyamic/Elastic Structural Systems Environmental Tests) studies, later considered to be critically important to the development of the shuttle.[8] Six launches of ASSET were conducted between September 1963 and March 1965. The test firings over the Atlantic Test Range used Thor and Thor-Delta boosters. ASSET subjected a wide range of structural and thermal protection materials to "an intensely realistic test environment."[9]

PRIME was devoted to the design, development, and testing of lifting body shapes suitable for orbital reentry. The genesis for the PRIME program was the emergent lifting body design by the Martin Company of Baltimore, Maryland, a Division of the Martin Marietta Company. Since late 1960, the Air Force had Martin under contract for developing a full-scale flight-testing program

---

[5] Williamson, "Developing the Space Shuttle," 162.
[6] John F. Guilmartin, Jr. and John Walker Mauer, "A Shuttle Chronology 1964---1973 Abstract Concepts to Letter Contracts," December 1988, Sweetsir Collection, Box 45E.3N1, Folder 90-16, Kennedy Space Center Archives, Florida, I-4 and I-5.
[7] Guilmartin and Mauer, "A Shuttle Chronology," I-1, I-5, and I-21. According to the DoD, cross-range capability, or the ability to move laterally during entry, was desirable so that landings could be made at locations some distance to the side of the normal entry path. In the 1960s, a major undertaking of NASA's Flight Research Center (now, Dryden Flight Research Center [DFRC]) was the study of rocket-powered lifting body vehicles, including the M2-F2, M2-F3, and HL-10.
[8] Guilmartin and Mauer, "A Shuttle Chronology," I-10, I-19, and I-28.
[9] Guilmartin and Mauer, "A Shuttle Chronology," I-10.

of a lifting reentry vehicle. Following the results of wind-tunnel tests on a variety of designs, Martin selected the SV-5 configuration, a high-volume lifting body designed by Hans Multhopp, an aerodynamicist working for Martin. The SV-5 design was refined into the SV-5D, a 34", 890-pound aluminum vehicle with an ablative heat shield.[10] The Air Force purchased four of these vehicles, which they designated the X-23A, and tested three, between December 1966 and mid-April 1967, as part of the PRIME project.[11] The tests, made over the Western Test Range (Pacific Ocean), launched from Vandenberg Air Force Base (AFB). The PRIME vehicles "achieved the first aerodynamic maneuvering reentries ever;" the third vehicle attained significant cross-range (about 2329 feet) by aerodynamic maneuvering; collectively, the nine ASSET and PRIME tests "provided a wealth of the aerothermodynamic data on which the shuttle designs were based."[12]

George Mueller, the head of the Office of Manned Space Flight (OMSF) at NASA Headquarters, believed that following Apollo, a large space station, supported by low-cost, reliable launch vehicles, was the next logical program for NASA.[13] Testifying before the Senate Space Committee on February 28, 1968, he stressed the importance of a new approach to space logistics. Later that year, in an August speech before the British Interplanetary Society, Mueller stated:

> *Essential to the continuous operation of the space shuttle will be the capability to resupply expendables as well as to change and/or augment crews and laboratory equipment . . . Our studies show that using today's hardware, the resupply cost for a year equals the original cost of the space station. . . Therefore, there is a real requirement for an efficient earth-to-orbit transportation system - an economical space shuttle . . . The shuttle ideally would be able to operate in a mode similar to that of large commercial air transports and be compatible with the environment at major airports.* [14]

According to R. Dale Reed in *Wingless Flight: The Lifting Body Story*, lifting bodies remained major contenders for the Shuttle configuration until 1969, when two events steered the design towards winged vehicles. First, the newly invented lightweight silicone tile, developed by Lockheed, could offer thermal protection for a winged vehicle with the addition of only minimum weight. Secondly, the mandate by Congress that the shuttle design satisfy Air Force as well as NASA requirements, including a large payload compartment, made winged vehicles more attractive as a shuttle candidate.[15] In actuality, the Air Force requirements for cross-range

---

[10] R. Dale Reed, with Darlene Lister, *Wingless Flight: The Lifting Body Story* (Washington, DC: NASA History Series, 1997), http://history.nasa.gov/SP-4220/ch7.htm.
[11] Reed, *Wingless Flight.*
[12] Guilmartin and Mauer, "A Shuttle Chronology," I-10.
[13] Jenkins, *Space Shuttle*, 77.
[14] Jenkins, *Space Shuttle*, 78.
[15] Reed, *Wingless Flight.*

capability and large payload space defined the potential shuttle configuration, as discussed below.

The definition of the Space Shuttle took shape largely between 1969 and early 1972. Feasibility and concept studies (Phase A) were succeeded by definition studies (Phase B), conducted by both NASA and industry contractors. For the contractors, these studies were carried out in an environment of changing baseline requirements. Many candidate concepts were offered, which evaluated the relative merits of straight versus delta wings; internal versus external propellant tanks; manned versus unmanned boosters; liquid versus solid propellant boosters; and sequential burn versus parallel burn solid rocket motors, among others.

Phase A: Shuttle Feasibility and Concept Studies

> *Not many people realize the impact that the Air Force requirements had on Shuttle. The 1,500-mile cross-range was something that they really wanted for the orbiter coming back in. They also wanted a larger payload bay, and some of the payload requirements were driven by them. The cross-range had a lot of impact on the configuration of the orbiter.*[16]

On May 10, 1968, NASA's MSC and the Marshall Space Flight Center (MSFC) in Huntsville, Alabama, jointly completed the scope of work (SOW) for the Integral Launch and Reentry Vehicle (ILRV) study. The contract would cover a six-month examination of several configuration concepts and operational approaches to a versatile round-trip transportation system. The SOW, based largely on work done at MSFC, demonstrated NASA's decision to pursue the goal of developing a space logistics capability; affirmed the worthiness of reusability as a means of reducing the cost of space travel; and clarified NASA's performance requirements for such a vehicle.[17]

The ILRV RFP was issued on October 30, 1968. In their shuttle chronology, Guilmartin and Mauer note that the issuance of this RFP marked the formal beginning of space shuttle design study: "the retroactive re-labeling of the ILRV study effort as Phase A of the shuttle program is clear evidence of this development."[18] The ILRV RFP was heavily influenced by three early designs developed by NASA and Air Force-supported defense contractors: the Lockheed Missile and Space Company's STAR (Space Transport and Recovery) Clipper (Star Clipper); the Convair Triamese; and the MSC in-house straight-wing shuttle design.

---

[16] James B. Odom, interview by Rebecca Wright, *NASA STS Recordation Oral History Project*, July 20, 2010, 2. http://www.jsc.nasa.gov/history/oral_histories/STS-R/OdomJB/OdomJB_7-20-10.htm. Mr. Odom served on the Source Selection Board for the Space Shuttle orbiter.
[17] Guilmartin and Mauer, "A Shuttle Chronology," II-2.
[18] Guilmartin and Mauer, "A Shuttle Chronology," I-4.

Lockheed's one-and-one-half-stage[19] Star Clipper combined a deep delta lifting body orbiter with high performance liquid oxygen (LO2)/liquid hydrogen (LH2) engines fed by a jettisonable external tank. It represented the first major concept that moved part of the propellant storage to an external tank. The Convair Triamese design (Figure No. A-2) featured three externally identical elements, including two outer boosters and a central orbiter element. The payload bays of the booster elements were fitted with fuel tanks, but otherwise shared the same design as the orbital element. Each of the elements had its own primary booster engines and switchblade wings. After reentry, the two boosters returned to the launch site as conventional aircraft. The orbital element continued to orbit with its engines fed by its own internal propellant supply.[20]

The MSC in-house design was developed under the direction of Dr. Maxime A. Faget, Director of Development and Engineering. It featured a two stage, fully reusable vehicle based on a straight, fixed wing orbiter with a larger booster mated piggyback style (Figure No. A-3).[21] Faget believed that the lifting body design was not practical for the space shuttle because of the dangerously high landing speed, and other reasons. He preferred that each stage of the space shuttle be designed as a winged airplane, which would only "fly" during the landing approach. Hence, the straight wing, he concluded, was the most suitable wing design.[22] The Air Force, which preferred the delta-shaped (triangular) wing, based on its experience with supersonic fighter planes and bombers, criticized Faget's straight wing as too simple. From the Air Force perspective, the delta wing better met their needs because of its superior cross-range capability.[23] However, this wing design would require more thermal protection due to the longer reentry period, resulting in a heavier and costlier shuttle.

On January 31, 1969, NASA awarded four six-month contracts for parallel design concept studies of a low-cost, space shuttle system, to McDonnell Douglas Astronautics Company (Contract No. NAS9-9204), managed by Langley Research Center (Langley); North American Rockwell Corporation (Contract No. NAS9-9205), managed by MSC; Lockheed Missile and Space Company (Contract No. NAS9-9206), managed by MSFC; and General Dynamics Corporation/Convair (Contract No. NAS9-9207), managed by MSFC.[24] The ILRV studies began with consideration of a broad range of concepts, including expendable stages and ballistic and semi-ballistic spacecraft. McDonnell Douglas, for example, originally studied a baseline design in detail, plus several alternate systems, corresponding to alternate payloads (size and weight).

---

[19] One-and-one-half-stage design refers to any element of primary boost propulsion system which drops off a stage before the stage itself is expended. For example, the stage which drops off could be one with strap-on solid boosters, or a jettisonable external tank, or both. Guilmartin and Mauer, "A Shuttle Chronology," I-15.
[20] "Triamese," *Encyclopedia Astronautica*, http://www.astronautix.com/lvs/triamese.htm.
[21] Guilmartin and Mauer, "A Shuttle Chronology," I-12.
[22] T.A. Heppenheimer, *History of the Space Shuttle*, vol. 1, *The Space Shuttle Decision: NASA's Search for a Reusable Space Vehicle* (Washington, DC: Smithsonian Institution Press, 2002), 207-209.
[23] Heppenheimer, *The Space Shuttle Decision*, 210, 213.
[24] Linda Neuman Ezell, *NASA Historical Databook Volume III Programs and Projects 1969-1978* (Washington, DC: NASA History Office, 1988), 121-124, table 2-57, http://history.nasa.gov/SP-4012/vol3/sp4012v3.htm; Jenkins, *Space Shuttle*, 79; Williamson, "Developing the Space Shuttle," 164.

Then, beginning in February 1969, the company examined a reusable spacecraft launched by expendable boosters, as well as a stage-and-one-half concept.

The first two months of the ILRV study convinced NASA that a fully reusable, two-stage vehicle was the preferred shuttle configuration. Consequently, at the end of March 1969, the contractors were directed to study a fully reusable shuttle. Two months later, NASA, in conjunction with the Air Force, decided to raise the payload requirement to 50,000 pounds with a volume of 10,000 cubic feet or more (that is, the internal volume of a 15' x 60' cylindrical payload bay). This represented a fundamental change in the definition of payload.[25]

A few months after initiation of the ILRV contractor studies, on April 21, 1969, George Mueller selected LeRoy E. Day to head the MSC's Space Shuttle Task Group (SSTG). The immediate purpose of the SSTG was to provide material for a report on the space shuttle to President Nixon's STG. The SSTG held its first meeting on April 24. Mueller stressed the relationship between the Shuttle and space station, and emphasized that the provision of logistic support to the space station was the prime justification for the Space Shuttle.[26]

On June 12, 1969, the SSTG released a five-volume report, which identified five criteria as the "space shuttle baseline vehicle requirements." These requirements, developed in cooperation with the DoD, included a 50,000-pound payload, a crew of two, a 10,000-cubic foot internal payload volume (15' x 60'), a 270-nautical mile orbit at 55-degree orbital inclination, and a seven day mission duration. As a result of this new development, on June 20, 1969, NASA redirected the contractors' Phase A studies. North American Rockwell, originally tasked with examining an expendable booster, was now directed to study Faget's straight-wing concept. McDonnell Douglas, originally focused on the stage-and-one-half design, switched to a two-stage, fully reusable configuration featuring orbiter designs derived from the HL-10 lifting body vehicle (Figure No. A-4); thirteen configurations were studied.[27] Lockheed continued their studies of the Star Clipper and its own version of the Triamese designs, while General Dynamics examined variants of the Triamese concept and a fully reusable concept with two elements. Each of the four contractors received a supplementary payment of $150,000 for the study extension. McDonnell Douglas received an additional $225,000 to cover an in-depth study of the two-stage fully reusable concept.[28]

---

[25] Guilmartin and Mauer, "A Shuttle Chronology," II-5.
[26] Guilmartin and Mauer, "A Shuttle Chronology," II-31.
[27] The HL-10, a NASA design, was one of five vehicles used in DFRC's Lifting Body Research Program. It was flown thirty-seven times, and logged the highest altitude and fastest speed in the program. The other four wingless lifting body vehicles in the program were the M2-F2, the M2-F3, the X-24A, and the X-24B. NASA DFRC, *HL-10 Lifting Body*, Fact Sheets (California: Dryden Flight Research Center, 2009). http://www.nasa.gov/centers/dryden/news/FactSheets/FS-010-DFRC.html.
[28] Heppenheimer, *The Space Shuttle Decision*, 218.

After the decision to drop the partially reusable designs was made at a meeting of shuttle managers on August 6, NASA would consider only fully reusable concepts. As summarized by Heppenheimer:

> *Partially-reusable designs had represented an effort to meet economic goals by seeking a shuttle that would cost less to develop than a fully-reusable system, even while imposing higher costs per flight. This approach had held promise prior to the spring of 1969, when the shuttle had been considered largely as a means of providing space station logistics. Now its intended uses were broadening to include launches of automated spacecraft which meant it might fly more often. The low cost per flight of a fully-reusable now made it more attractive, and encouraged NASA to accept its higher development cost.*[29]

The ILRV contractors submitted their final Phase A study reports in December 1969.[30] In the executive summary to their three-volume report, McDonnell Douglas stated that the objective of study was "to provide verification of the feasibility and effectiveness of the MSC in-house studies and provide design improvements, to increase the depth of engineering analyses and to define a development approach."[31] The McDonnell Douglas study emphasized a two stage to orbit reusable spacecraft system. The upper stage orbiter was a 107' HL-10 configuration, modified slightly in the base area to accommodate the two booster engines. The launch propellant tanks were integral with the primary body structure. The carrier was a 195' clipped delta configuration with ten launch engines identical to those of the orbiter. A dual lobed cylindrical launch propellant tank formed the primary body structure. A 15 percent thick delta wing was incorporated, which contained the landing gear, air-breathing engines, and propellant.[32]

NASA also received a report from the Martin Marietta Corporation on December 1. This study, unfunded by NASA, used the ILRV study guidelines and was coordinated with the SSTG. The study featured the Spacemaster vehicle, a two-stage, fully reusable vehicle featuring a twin-fuselage catamaran booster and delta-winged orbiter situated between the booster fuselages.[33]

---

[29] Heppenheimer, *The Space Shuttle Decision*, 218-219.
[30] North American Rockwell Space Division, *Study of Integral Launch and Reentry Vehicle System, Final Report*, Volume I, Summary Report – Second Phase, December 1969, Sweetsir Collection, Accession No. N70-31832, Kennedy Space Center Archives, Florida; Lockheed Missiles & Space Company, *Final Report Integral Launch and Reentry Vehicle*, LMSC-A959837, December 22, 1969, Sweetsir Collection, Accession No. X70-13624, Kennedy Space Center Archives, Florida; McDonnell Douglas Corporation, *A Two-Stage Fixed Wing Space Transportation System, Final Report*, Volume I Condensed Summary, December 15, 1969, i, Sweetsir Collection, Accession No. N70-31597, Kennedy Space Center Archives, Florida.
[31] McDonnell Douglas Corporation, *A Two-Stage System*, i.
[32] McDonnell Douglas Astronautics Company, *Integral Launch and Reentry Vehicle System*, Executive Summary, Contract NAS9-9204, Report No. MDC E0049, November 1969, Sweetsir Collection, Kennedy Space Center Archives, Florida.
[33] Martin Marietta Corporation, Denver Division, *Spacemaster A Two-Stage Fully Reusable Space Transportation System. Phase A Final Report*, M-69-36, December 1969, Sweetsir Collection, Accession No. N70-74750, Kennedy

On December 10, 1969, a joint NASA-DoD Space Shuttle Task Group submitted a "Summary Report of Recoverable versus Expendable Booster Space Shuttle Studies," in which the group recommended a fully reusable system.[34] Thus, at the completion of Phase A studies, NASA's plan was to develop a STS based on a fully reusable two-stage shuttle. Both the booster and orbiter stages would be rocket-powered, burning hydrogen and oxygen carried in internal fuel tanks. "After launch, the booster would fly back to the launch site for a horizontal landing and be refurbished for the next flight. The orbital stage would proceed to orbit and, upon completing its mission, return to Earth and land horizontally. The projected development cost for this configuration was $5.2 billion."[35] Dr. Faget presented this shuttle configuration concept to a meeting of the American Institute of Aeronautics and Astronautics in California in late 1969.

Phase B: Shuttle Definition Studies

The Phase A studies had demonstrated the "technical feasibility and the economic benefits of the space shuttle."[36] As a next step, prior to the submittal of final Phase A study reports, NASA initiated a Phase B definition program which included the preliminary design of a fully reusable two-stage space shuttle vehicle. A joint Air Force and NASA Design Criteria Review identified evaluation criteria and established baseline systems characteristics for Phase B space shuttle development in October 1969. At this time, the shuttle requirements included a payload capacity of 25,000 pounds, a 240 nautical mile, 55-degree orbit, and a 200 to 1,500 nautical mile cross-range capability. Both straight winged and delta winged designs were to be studied.[37]

The SOW for Phase B space shuttle definition studies, released by the OMSF in October 1969, defined the preliminary design and planning effort. It also included all system elements for the space shuttle configuration, and the identification of "all appropriate interfaces between the booster and the orbiter such that separate phase C contracts could be let if desired."[38] Two months later, NASA established the Phase B Source Evaluation Board.[39]

NASA issued the RFP for Phase B definition studies on February 18, 1970, with proposals due on March 30. Following the evaluation of proposals, on May 12, 1970, NASA selected two firms

---

Space Center Archives, Florida.
[34] Ezell, *Databook Volume III*, 121-124, table 2-57.
[35] US House, Committee on Science and Technology, Subcommittee on Space Science and Applications, *United States Civilian Space Programs, 1958-1978* (Washington, DC: US Government Printing Office, 1981), 451.
[36] L.E. Day, "The Space Shuttle A New Approach to Space transportation," paper presented at the XXIst International Astronautical Congress, Constance, German Federal Republic, October 9, 1970, 5, Marshall Space Flight Center History Office, Alabama.
[37] US House, *United States Civilian Space Programs*, 452.
[38] NASA Office of Manned Space Flight, *Statement of Work, Space Shuttle System Program Definition (Phase B)* (Huntsville, AL: MSFC History Office, October 1969), 2.
[39] Jessie E. Whalen and Sarah L. McKinley, "Chronology: MSFC Space Shuttle Program, Development, Assembly, and Testing Major Events (1969-April 1981)," (Huntsville, AL: George C. Marshall Space Flight Center, Management Operations Office, December 1988), 3.
http://ntrs.nasa.gov/archive/nasa/casi.ntrs.nasa.gov/19910005807_1991005807.pdf.

for negotiation leading to eleven-month, $8 million fixed-price contracts for parallel studies.[40] NASA awarded Phase B contracts to McDonnell Douglas (teamed with Martin Marietta; Contract No. NAS9-26016) and to North American Rockwell (teamed with General Dynamics; Contract No. NAS8-10960).[41] MSFC was to manage the McDonnell Douglas contract, and MSC was to oversee the North American Rockwell work. Each contractor was tasked with studying two designs in parallel: one for an orbiter with a cross-range of 200 nautical miles, and the other for a cross-range of 1500 nautical miles.[42] In a presentation before the International Astronautical Congress in October 1970, Leroy E. Day reported that the Phase B studies, scheduled to be completed by June 1971, "will provide data which will define the program in terms of vehicle design, the cost and schedule of such a program and identify critical technology requirements."[43]

The booster portion of the shuttle initially developed by North American Rockwell was a manned, powered, fly-back vehicle. Propulsion systems for the baseline design included twelve main engines, twenty-two altitude control thrusters, and four thrust air-breathing engines. The flight deck was designed to hold a two-man flight crew.[44] Both McDonnell Douglas and North American Rockwell proposed a fully reusable orbiter carrying all propellant tankage within the fuselage. The designs, however, differed in regard to the thermal protection system. McDonnell Douglas favored hot structures "with insulation to protect the underlying framework and temperature-resistant metal panels facing the heat of reentry."[45] North American Rockwell proposed using thermally protective tiles applied directly to the titanium skin of the airframe, with the exception of the upper wing surfaces, upper fuselage, nose, wing leading edges, and vertical fin.[46]

In January 1971, NASA rewrote the shuttle specifications to include a delta-winged orbiter with a 1,500 nautical mile cross-range capability and the ability to put a 65,000-pound payload into a 100 nautical mile due east orbit, 40,000 pounds into polar orbit, and 25,000 pounds into a 277 nautical mile, 55-degree orbit. The estimated development cost for this configuration was about $9.9 billion. In the face of budget cutbacks, NASA was uncertain whether this configuration could move forward. In March 1971, NASA instructed McDonnell Douglas and North American Rockwell to develop variants of their configurations to include external, expendable LH2 tanks.[47] NASA began the study of alternate booster concepts "to achieve a less expensive design for the shuttle."[48] Mid-1971 marked the beginning of change to "the entire approach," as the "economics of annual funding rates would play a key role in designing the final configuration."[49]

---

[40] Whalen and McKinley, "Chronology," 5.
[41] Baker, "Evolution of the Space Shuttle Part 1," 203.
[42] Heppenheimer, *The Space Shuttle Decision*, 224.
[43] L.E. Day, "The Space Shuttle," 21.
[44] Baker, "Evolution of the Space Shuttle Part 1," 209-210.
[45] Heppenheimer, *The Space Shuttle Decision*, 333.
[46] Heppenheimer, *The Space Shuttle Decision*, 335.
[47] Heppenheimer, *The Space Shuttle Decision*, 338.
[48] US House, *United States Civilian Space Programs*, 452.
[49] David Baker, "Evolution of the Space Shuttle, North American Rockwell – Part 2." *Spaceflight* 15, (July 1973):

Both North American Rockwell and McDonnell Douglas released their Space Shuttle Phase B Final Reports in June 1971. However, the following month, NASA awarded four-month contract extensions, from July 1 to October 30, 1971, to each contractor. A second extension added four additional months, through February 1972, with the option for a further extension to April 30, 1972. McDonnell Douglas examined external hydrogen and oxygen tankage for the orbiter, interim expendable boosters, various system concepts, and a "relaxation of specific requirements," including reduced payload weights associated with the interim expendable boosters. The most significant changes were those associated with accommodating low-cost recoverable and reusable booster concepts.[50] The booster concepts of both McDonnell Douglas and North American Rockwell proposed large and heavy vehicles, each with twelve space shuttle main engines and either ten turbojets or twelve jet engines, respectively, for flyback to the launch site.[51]

In addition, "Phase A Extension" contracts were awarded to Grumman/Boeing and to Lockheed Missiles and Space Company to study a phased approach to shuttle design and the use of liquid or solid propellant boosters for interim capability.[52] NASA also provided extensions to these parallel Phase A study contracts. While the Phase A and Phase B studies initially proceeded independently of each other, after time these efforts began to overlap, particularly in regard to the external orbiter fuel tankage. When the shuttle specifications were rewritten in January 1971, as described previously, NASA directed that both Phase A and Phase B studies use the same performance criteria.

Alternate Concept Studies

Shortly after North American Rockwell and McDonnell Douglas started the Phase B studies, on June 15, 1970, NASA selected Grumman (teamed with Boeing; Contract No. NAS9-11160), Lockheed (Contract No. NAS8-26362), and Chrysler (Contract No. NAS8-26241) to conduct eleven-month feasibility studies ("Extended Phase A" studies) on alternate shuttle design concepts. The objective of these studies was to answer the basic question of whether there was a lower cost shuttle option than the two-stage fully reusable system. The alternate concept studies proceeded concurrently with both shuttle Phase A and Phase B studies, and generally served to influence design concepts and philosophies.[53]

The examination of alternative concepts focused on a partially reusable configuration with propellant carried in expendable tanks. The shift from a fully reusable to partially reusable configuration reflected NASA's pragmatism in the face of funding obstacles. While NASA's intended goal for the STS was to provide a low cost capability "for delivering payloads of men,

---

268.
[50] McDonnell Douglas Corporation, *Phase B System Study Extension Final Report*, 1-2.
[51] Heppenheimer, *The Space Shuttle Decision*, 346.
[52] David Baker, "A Chronology of the Space Shuttle." *Spaceflight* 15, (June 1973): 214.
[53] US House, *United States Civilian Space Programs*, 452.

equipment, supplies, and other spacecraft to and from space," the ultimate goal was to develop a permanent manned space station.[54] However, to secure program approval, NASA had to meet its commitment to the US Government Office of Management and Budget (OMB) to make access to space more economical. One key strategy was getting support from the DoD.[55] Among the Air Force requirements for the shuttle were that it was powerful enough to accommodate large payloads such as classified satellites, and the ability to fly often and on short notice.[56] Ultimately, in an effort to overcome congressional opposition to the shuttle program, and to reduce costs in the face of continued federal budget cuts, NASA chose a partially rather than a fully reusable shuttle design, with the support of the Air Force.

Grumman/Boeing was awarded a $4 million contract to evaluate a stage-and-one-half shuttle with expendable propellant tanks, a reusable orbiter with expendable booster, and a reusable booster and solid propellant auxiliary boosters. This contract was managed by MSC. Lockheed received a $1 million contract to study an expendable tank orbiter, and Chrysler was awarded a $750,000 contract to study a single-stage reusable orbiter. Both of these contracts were managed by MSFC.

The study of alternate space shuttle concepts initiated by Grumman/Boeing started with twenty-nine configurations in three general concept categories, which included:

- stage-and-one-half with and without thrust augmentation (e.g., strap-on solid rocket motors; cryogenic or hypergolic strap-on propulsion packages);
- expendable booster with reusable orbiter; and
- two-stage reusable orbiter and booster systems with several approaches.

During the five-month study, all but four of the initial twenty-nine configurations were eliminated. The four that remained were studied and evaluated in detail. These included:

- a stage-and-one-half orbiter with solid rocket thrust augmentation;
- a two-stage solid rocket expendable booster; and
- a two-stage fully reusable system, both with and without a phased development option (which involved several years of low flight rate operation using a modified S-1C booster).

The study results through December 15, 1970, were presented in a mid-term report, dated December 31, 1970. In this document, the Grumman/Boeing team concluded that the two-stage fully reusable system (reusable orbiter/booster concept) without phased development offered the

[54] Jenkins, *Space Shuttle*, 99.
[55] Jenkins, *Space Shuttle*, 99.
[56] David M. Harland, *The Story of the Space Shuttle* (Chichester, UK: Praxis Publishing, 2004), 5.

lowest cost per flight operation, the lowest total program cost, and the fewest operational restrictions.[57]

In parallel with these studies, in the fall of 1970, Grumman investigated other possible design concepts. The most promising approach used expendable external tanks; this concept was presented to MSC in November 1970.[58] Subsequently, NASA directed the Grumman/Boeing team to conduct parallel studies of reusable two stage configurations employing internally and externally mounted orbiter hydrogen tanks; these studies were conducted as the second phase of the alternate concepts study, performed under Contract Change Modification 5C to Contract NAS9-11160. Following review by NASA in March and April 1971, the Grumman/Boeing team was authorized to study a three-engine, external hydrogen tank orbiter in conjunction with the heat sink booster, referred to as the H-33 configuration.[59]

Grumman released their *Alternate Space Shuttle Concepts Study Final Report* on July 6, 1971. Subsequently, under the four-month extension to its Alternate Space Shuttle Concepts Study, between July and November 1971, the Grumman/Boeing team investigated "potentially cost-attractive programmatic and technical alternatives."[60] These alternatives included a phased approach involving orbiter development and operation with an expendable booster for an interim period, as well as design variations to the basic vehicle. On March 15, 1972, Grumman/Boeing submitted its *Phase B Extension Final Report* (Contract No. NAS9-11160).[61]

Lockheed Missiles and Space Company began a four-month study under an extension of the Phase A Alternate Space Shuttle concepts contract (Contract No. NAS8-26362) on July 1, 1971. The study entailed examination and analysis of a two-and-one-half-stage, stage-and-one-half, and solid rocket motor (SRM) interim booster systems "for the purpose of establishing feasibility, performance, costs, and schedules for these systems concepts."[62] In mid-September, NASA directed Lockheed to concentrate orbiter analysis work on an external tank delta-wing orbiter configuration launched on either a reusable LO2/RP-fueled booster or a reusable

---

[57] Grumman Aerospace Corporation, *Alternate Space Shuttle Concepts Mid-Term Report, Volume I – Executive Summary* (Huntsville, AL: Marshall Space Flight Center History Office, December 31, 1970); Grumman Aerospace Corporation, *Alternate Space Shuttle Concepts Study Final Report, Part I Executive Summary* (Huntsville, AL: Marshall Space Flight Center History Office, July 6, 1971), viii.
[58] Grumman Aerospace Corporation, *Alternate Space Shuttle Concepts*, 1-1.
[59] Grumman Aerospace Corporation, *Alternate Space Shuttle Concepts*, 1-2, 2-1. The H-33 configuration was compared with the Phase B design with internal liquid hydrogen tanks in the orbiter and a conventional booster design, referred to as the G-3 configuration.
[60] Grumman Aerospace Corporation, *Alternate Space Shuttle Concepts Study, Design Requirements and Phased Programs Evaluation, Midterm Review*, September 1, 1971, Sweetsir Collection, Accession No. N73-17877, Kennedy Space Center Archives, Florida.
[61] Grumman Aerospace Corporation, *Space Shuttle System Program Definition Phase B Extension Final Report*, March 15, 1972, Sweetsir Collection, Accession No. T72-12483, Kennedy Space Center Archives, Florida.
[62] Lockheed Missiles and Space Company, *Final Report Alternate Concepts Study Extension, Volume I Executive Summary*, November 15, 1971, iii, Sweetsir Collection, Accession No. N73-30844, Kennedy Space Center Archives, Florida.

pressure-fed ballistic booster. Work was to continue at a low level on the stage-and-one-half system and the Lockheed-recommended SRM booster. Lockheed submitted the *Final Report for the Alternate Space Shuttle Concepts Study* on June 4, 1971, and the *Alternate Concepts Study Extension Final Report* on November 15, 1971.

Also in 1971, as part of the alternate concept studies, Project SERV (Single-stage Earth-orbital Reusable Vehicle) was carried out by the Chrysler Corporation Space Division under Contract NAS8-26341. The purpose of this study was to evaluate the potential of SERV as the boost element of a candidate STS. Five technical areas affecting concept feasibility were studied, including engine performance, aerodynamic characteristics, thermal protection, subsystem weights, and the landing methods. Chrysler was supported by subcontractors North American Rockwell Corporation, Rocketdyne Division for design of the SERV aerospike engine, as well as AVCO Systems Division, for design and cost data for thermal protection systems.[63]

Concurrent with the contractor efforts, MSC continued in-house studies. Faget examined designs with expendable tanks, and in May 1971, debuted design MSC-023, which featured an orbiter with delta wings, a 15' x 60' cargo bay, and all propellants carried in a single large underbelly tank. "Here, for the first time, was the outline of a shuttle orbiter that would actually be built."[64] The following month, Faget released MSC-037, a variant with three main engines and a 40,000 pound payload. Lockheed, McDonnell Douglas, and North American Rockwell strongly endorsed this design.[65]

A radically transformed shuttle design configuration emerged, much unlike the vehicle conceived at the outset of Phase B. Further studies in Phase B showed that savings could result if both the oxygen and hydrogen tanks were carried outside the orbiter, thus permitting a reduction in the size of the orbiter.[66] In May 1971, NASA decided in favor of placing the propellant tanks outside the orbiter; hence, the "external" tank. The partially reusable design with external propellant tank and a delta-wing orbiter was about half the manufacture cost of a fully reusable vehicle. It also enhanced the aerodynamics of the orbiter and increased its safety.

By July 1971, NASA Administrator James C. Fletcher said that the preferred configuration emerging from the contractor studies, then nearing completion, was "a two-stage delta-wing reusable system in which the orbiter has external propellant tanks that can be jettisoned."[67] The

---

[63] Chrysler Corporation Space Division, *Single-stage Earth-orbital Reusable Vehicle. Space Shuttle Feasibility Study, Final Report on Project*, Volume I, June 30, 1971, iii, Sweetsir Collection, Kennedy Space Center Archives, Florida.
[64] Heppenheimer, *The Space Shuttle Decision*, 344.
[65] In September 1971, North American Rockwell presented its own version of the MSC-037, and subsequently, NASA instructed the contractors to adopt a variant, the MSC-040, as a basis for comparison with their on-going studies. Heppenheimer, *The Space Shuttle Decision*, 344-346.
[66] David Baker, "Evolution of the Space Shuttle – North American Rockwell, Part 3," *Spaceflight* 15, (September 1973): 344.
[67] "NASA studies a new approach to developing Space Shuttle system," *Roundup*, July 2, 1971, 1.

external tank would be the only non-reusable part of the STS. NASA adopted an external LO2/LH2 tank for the baseline orbiter in August 1971.

The Final Configuration

More than twenty-nine different shuttle designs were analyzed in 1971 before NASA announced the final shuttle configuration on March 15, 1972.[68] When the decision to proceed with the development of the shuttle system was announced by President Nixon in January 1972, NASA was still studying both solid and liquid-propellant booster alternatives. However, by March, the booster question had been resolved. The fly-back booster was officially abandoned. Two solid propellant boosters would flank the LO2/LH2 tank used by the delta-winged orbiter. The booster stage would be powered by SRMs in a parallel burn configuration.[69] NASA's booster studies had shown that both solid and liquid propellant configurations would have been feasible from a technical perspective. The decision was based on the lower cost and lower technical risks shown in the studies for the solid rocket system.[70]

As NASA explained in its "Space Shuttle Fact Sheet," "the evolution to the present simpler concept resulted from in-depth studies for each of several candidate concepts, or development risk and cost in relation to the operational suitability and overall economics of the entire system."[71] The decision to use recoverable and reusable boosters with solid propellant rocket motors was based on the lower development cost ($5.15 billion), the "least capital risk per flight, and lowest technical risk of development." Compared with liquid boosters, NASA estimated that the development costs of the solid rocket motor boosters would be about $700 million lower.[72]

Launch Site Selection

Concurrent with the shuttle design studies, NASA conducted a search for a shuttle launch and recovery site. By 1970, NASA received over 100 unsolicited bids from across the US, and choosing a launch site had become a political issue. To facilitate the selection process, the Ralph M. Parsons Company of Los Angeles, California, was awarded a $380,000 contract to review potential locations. Also, a fourteen-member Space Shuttle Facilities Group was established to select the final site. After nearly a year of study, on April 14, 1972, NASA announced the selection of the John F. Kennedy Space Center (KSC) in Florida (Figure No. A-5), and Vandenberg AFB in California (Figure No. A-6), as the two launching sites.[73] Numerous variables, such as booster recovery, launch azimuth limitations, latitude and altitude effects on

---

[68] Williamson, "Developing the Space Shuttle," 167, 172
[69] "Boost Stage To Be Solid Propellant," *Roundup*, March 17, 1972: 1; David Baker, "Evolution of the Space Shuttle, North American Rockwell – Part 3," *Spaceflight* 15, (September 1973): 350.
[70] NASA KSC, "Space Shuttle Decisions," NASA News Release No. KSC-60-72, March 15, 1972, Sweetsir Collection, Box 67D.6, Folder 12, Kennedy Space Center Archives, Florida.
[71] NASA, "Space Shuttle Fact Sheet," October 1972, Marshall Space Flight Center History Office, 2.
[72] NASA, Space Shuttle Fact Sheet," 2-4.
[73] Ezell, *NASA Historical Databook Volume III*, 121-124, table 2-57.

launch, and impact on present and future programs were taken into account by NASA. The fact that NASA had already invested over $1 billion in launch facilities at KSC made it a logical choice. KSC would be used for easterly launches, accounting for most missions. North-south polar orbits from KSC, however, would have been a safety risk to South Florida, the northeast US, Mexico, and Canada. They also would have flown over Cuba. Therefore, Vandenberg was to launch spacecraft for operational missions requiring high inclination, desired for military satellite deployments.[74]

Like KSC, where existing facilities could be modified and reused, the Vandenberg Launch Site (VLS) already housed a launch and landing site, Space Launch Complex Six (SLC-6), built for the Manned Orbiting Laboratory Program, which was cancelled in 1969.[75] Though smaller than KSC, the Vandenberg complex, divided between South Base and North Base, included all the buildings and structures necessary to launch, process, modify, and land an orbiter. *Discovery* was to be stationed there, primarily dedicated to DoD missions.

Center Responsibilities and Contractor Awards

In June 1971, the OMSF announced that the MSC would be the lead center for shuttle program management, overall engineering and systems integration, and basic performance requirements for the shuttle, as well as for development and testing of the orbiter.[76] MSFC was responsible for development of the space shuttle main engine (SSME), the solid rocket boosters (SRBs), the external tank (ET), and for all propulsion-related tasks. Engineering design support continued at MSC, MSFC, and Langley,[77] and engine tests were to be performed at NASA's Mississippi National Space Technology Laboratories; later named Stennis Space Center, and at the Air Force's Rocket Propulsion Laboratory in California, the Santa Susana Field Laboratory. KSC, responsible for designing the launch and recovery facilities, was to develop methods for shuttle assembly, checkout, and launch operations.[78]

On January 5, 1972, President Nixon instructed NASA to proceed with the design and building of a partially reusable Space Shuttle consisting of a reusable orbiter, three reusable main engines, two reusable SRBs, and one non-reusable ET. NASA's administrators vowed that the shuttle would fly at least fifty times a year, making space travel economical and safe.

In March 1972, NASA issued an RFP for development of a space shuttle. Technical proposals were due by May 12, 1972, with cost proposals due one week later. In its instructions, NASA noted that:

---

[74] Jenkins, *Space Shuttle*, 155.
[75] Jenkins, *Space Shuttle*, 155.
[76] "Agency gets Go-ahead to Develop Shuttle," *Roundup*, January 7, 1972, 1.
[77] Jenkins, *Space Shuttle*, 122.
[78] Ezell, *NASA Historical Databook Volume III*, 121-124, table 2-57; Williamson, "Developing the Space Shuttle," 172-174.

> *The primary objective of the Space Shuttle Program is to provide a new space transportation capability that will (a) reduce substantially the cost of space operations, and (b) provide a capability designed to support a wide range of scientific, defense and commercial uses.*

Proposals were submitted by four major aerospace corporations, all of which had participated in the earlier definition studies. The Air Force, a prospective major user of the Space Shuttle, participated in the contractor selection process. The Space Division of North American Rockwell Corporation of Downey, California, was selected as the prime contractor responsible for design, development, and production of the orbiter vehicle and for integration of all elements of the Space Shuttle system. The contract was valued at $2.6 billion over a period of six years.

In July 1971, NASA's MSFC announced that Rocketdyne had been selected to design and manufacture the SSMEs.[79] The contract was confirmed in May 1972. Other contract awards followed. In August 1973, the Martin Marietta Corporation was selected to design, develop, and test the ET, with tank assembly taking place at NASA's Michoud Assembly Facility near New Orleans, Louisiana. Also in 1973, a contract covering SRM development for the SRB was awarded to Thiokol Chemical Company (now ATK Thiokol Propulsion) of Utah.

A seven-year development period was planned, resulting in full operational activities beginning in mid-1979. However, the shuttle development program formally took nine years. In a seeming prediction of future events, in 1971, David Baker noted that ". . . it is likely that shuttle development will stretch considerably beyond the predicted schedule. It can be expected that the integration of shuttle development with relatively static NASA budgets will spread the initial date of operations out to the 1981-83 period at least."[80]

The $246 billion 1973 fiscal year (FY) budget sent to Congress by President Nixon included $3.379 billion for NASA, or roughly 1.3 percent of the total budget. This request included $200 million for Space Shuttle development. At this time, the total development costs were expected to be roughly $5.5 billion with an operational system in place by the end of the decade. Thirty to forty launches per year were assumed. While specific funding for the Shuttle did not begin until 1974, by 1973 NASA already had moved from the planning and study stage to design and production.[81]

---

[79] Ezell, *NASA Historical Databook Volume III*, 121-124, table 2-57.
[80] David Baker, "A Schedule for the Shuttle," *Spaceflight* 13, (December 1971): 454.
[81] Henry C. Dethloff, "The Space Shuttle's First Flight: STS-1," in *From Engineering Science to Big Science: The NASA and NASA Collier Trophy Research Project Winners*, ed. Pamela E. Mack, (Washington, DC: US Government Printing Office, 1998), 289.

Between 1973 and 1977, several discrete system designs were adopted, tested, modified, or deleted. The earliest tests of SSME principal components began in August 1973,[82] ET component testing started in 1974, and tests on the SRB components began in 1976. Wind tunnel tests on integrated shuttle components were started by 1977. Descriptions of the development and test programs for the major propulsion elements are contained in the separate sections addressing the Space Shuttle Main Engines, External Tank, and Solid Rocket Booster/Reusuable Solid Rocket Motors (Parts III, IV, and V, respectively).

Orbiter Prototype Enterprise

Rockwell International began structural assembly of the orbiter prototype, orbiter vehicle (OV)-101 in early 1975; the vehicle originally was intended to be rebuilt into a flight-capable orbiter. Although incapable of space flight, OV-101 reflected the overall design of the flight orbiter. It featured numerous substitute components as placeholders for the equipment found in vehicles built for actual space flight.[83]

Slated to be named *Constitution* in honor of the Bicentennial, as the result of a massive letter campaign, on September 8, 1976, OV-101 was officially designated *Enterprise* after the *Star Trek* television program starship. The roll-out of *Enterprise* on September 17, 1976, was attended by thousands, including *Star Trek* actors Leonard Nimoy, George Takei, and DeForest Kelly.[84] In the weeks before rollout, Rockwell oversaw a horizontal ground vibration test at Palmdale to verify structural dynamics data for a full-sized orbiter.[85] On January 31, 1977, OV-101 was moved overland from Palmdale to DFRC at Edwards AFB for use in the Approach and Landing Test (ALT) Program, as described below (Figure No. A-7). Transport of the orbiter test vehicle, which weighed approximately 150,000 pounds, proceeded at about three miles per hour.[86] Following completion of the ALT program, *Enterprise* was flown to MSFC for a series of Mated Vertical Ground Vibration Tests (MVGVT) to determine the structural integrity of the shuttle vehicle. The test program, initiated in May 1978 and completed in February 1979, simulated the period of flight just prior to SRB separation.[87] *Enterprise* was later used in a variety of other test programs, even after its transfer to the Smithsonian in 1985.

---

[82] Robert E. Biggs, "Space Shuttle Main Engine, The First Ten Years," in *History of Liquid Rocket Engine Development in the United States, 1955-1980*, ed. Stephen E. Doyle (American Aeronautical Society History Series, Volume 13, Part 3, Chapter 4, 1992).
[83] "Orbiter Gets a Nose Cap," *Marshall Star*, May 19, 1976, 7.
[84] T.A. Heppenheimer, *History of the Space Shuttle*, vol. 2, *Development of the Space Shuttle, 1972-1981* (Washington, DC: Smithsonian Institution Press, 2002), 100-101.
[85] Tests in the early 1970s at Langley Research center used 1/8th-scale models to study the anticipated longitudinal oscillation frequencies, known as "pogo." A second round of model tests, at 1/4th scale, had been a joint effort of the JSC and Rockwell in 1975. Heppenheimer, *Development of the Space Shuttle*, 100, 251-252.
[86] "Enterprise Will Begin First Trip Next Monday," *Marshall Star*, January 26, 1977, 1 and 4.
[87] Andrew J. Dunar and Stephen P. Waring, *Power to Explore: A History of Marshall Space Flight Center, 1960-1990* (Washington, DC: NASA History Office, 1999), 314.

Approach and Landing Test Program: 1977

Prior to the actual test flights, wind tunnel tests in support of the ALT program were carried out at DFRC as well as NASA's Ames Research Center (Ames) at Moffett Field, California. The 1977 wind tunnel tests at DFRC used a .36-scale replica of the orbiter, fabricated by Rockwell International Corporation's Los Angeles Aircraft Division. The replica had an overall fuselage length of 38.71', a wingspan of 28.10', was 20.40' tall, and weighed 45,000 pounds. It was covered by simulated tiles made from a high-density Styrofoam, and was equipped with remotely controlled elevons, body flap, and speed brake and rudder panels, on which the control surface seals and gaps were simulated. The primary objectives of the scale model tests were to evaluate "TPS simulation effects on aerodynamic characteristics; elevon effectiveness employing flipper doors and simulated hinge line seals and gaps; body flap and rudder/speed brake effectiveness; and calibration of the flight test and air data system probe in the flow field of the vehicle."[88] A one-third scale model of the orbiter was also tested at Ames' wind tunnel to gather low speed flight data in support of the ALT program.[89]

Initial flight tests of an aircraft resembling the orbiter were performed concurrent with the assembly of OV-101. These early tests, conducted in 1975, made use of the X-24B lifting body vehicle (Figure No. A-8). Two years later, between February and October 1977, the ALT program aimed at checking out both the mating with the Boeing 747 Shuttle Carrier Aircraft (SCA) for ferry operations, as well as the orbiter's unpowered landing capabilities. NASA selected two, two-man orbiter crews for the ALT: Fred W. Haise, Jr. (Commander) and C. Gordon Fullerton (Pilot), and Joe H. Engle (Commander) and Richard H. Truly (Pilot). Crewmembers for the SCA included pilots Fitzhugh I. Fulton, Jr. and Thomas C. McMurtry, as well as flight engineers Victor W. Horton, Thomas E. Guidry, Jr., William R. Young, and Vincent A. Alvarez.[90] The first phase of the program, conducted on February 15, 1977, entailed three high-speed taxi tests at Runway 04/22, the main concrete runway at Edwards AFB. The purpose of these tests was to "assess directional stability and control, elevator effectiveness during rotation prior to takeoff, airplane response in pitch, thrust reverser effectiveness, use of the 747's brakes, and airframe buffet."[91] The tests were a success and demonstrated the flightworthiness of the SCA-orbiter combination.

The following "captive-inert" phase of testing, conducted in February and March, served to qualify the SCA for use in ferry operations. Six flights were planned at increasing speeds for the purpose of evaluating the flying and handling characteristics of the mated configuration, including such qualities as buffeting and flutter, airspeed calibration, and stability. This phase of the test series was controlled on the scene at DFRC. Given the success of the first three flights,

---

[88] "Shuttle Begins Wind Tunnel Tests," *X-Press*, June 20, 1975, 3.
[89] "Orbiter Model," *X-Press*, February 27, 1976, 3.
[90] Peter Merlin, "Proving Grounds. Enterprise validated shuttle concepts," *The Dryden X-Press*, September 2011, 6-7.
[91] Heppenheimer, *Development of the Space Shuttle*, 106.

Deke Slayton, manager of the ALT program, decided to cancel the final (sixth) flight. The goal of the last two test flights was to conduct the maneuvers of an air launch.

Next, three "captive-active" tests were performed on June 18, June 28, and July 26, 1977. These tests marked the first time that the Mission Control Center at JSC controlled a shuttle in flight. During these tests, the orbiter was piloted and powered up while attached to the SCA to check how the *Enterprise* would perform in the air. The third captive-active test deployed the shuttle landing gear for the first time.[92]

The final phase of testing marked the first free flight of the orbiter. Five test free flights were conducted between August 12 and October 26, 1977 (Figure No. A-9). The third free flight on September 23 used the microwave landing system at Edwards AFB for the first time. The final flight landed on the concrete runway at Edwards AFB rather than a dry lake bed, as used before. According Peter Merlin, this landing was "an important demonstration of precision landing capabilities necessary for later operational missions."[93] The first three free tests were flown with the tail cone (fairing) on the orbiter; the fourth and fifth free flights were made with dummy engines in an effort to replicate actual flight conditions.[94] Overall, the ALT program was successful in providing both operational experience as well as "benchmarking data for the flight simulators that were the working tools of day-to-day astronaut training."[95] In addition, the test results illustrated where significant redesign of the orbiter was needed.

Mated Vertical Ground Vibration Tests: 1978-1979

Following completion of the ALT flights, *Enterprise* was flown to MSFC for the MVGVT series, the objective of which was to determine the structural integrity of the shuttle vehicle. The test program, initiated in May 1978, and completed in February 1979, simulated the period of flight just prior to SRB separation (Figure No. A-10).[96] The MVGVT series "used a set of exciters and sensors placed on the skin of the mated elements to create and monitor vibrations and resonances to those that would later be encountered during powered ascent."[97] In 1977, prior to the start of the test program, the *Pathfinder*, a 75-ton shuttle orbiter weight simulator, was built at the MSFC to validate the facilities being used for the MVGVT series (Figure No. A-11). This steel structure, which approximated the dimensions of the *Enterprise*, was used to practice lifting and handling the orbiter. It was also used to fit check the roads and facilities that were used during the MVGVT.[98]

---

[92] Heppenheimer, *Development of the Space Shuttle*, 121.
[93] Merlin, "Proving Grounds," 7.
[94] Merlin, "Proving Grounds," 7.
[95] Heppenheimer, *Development of the Space Shuttle*, 121.
[96] Dunar and Waring, *Power to Explore*, 314.
[97] Jenkins, *Space Shuttle*, 213.
[98] Jenkins, *Space Shuttle*, 215.

The earliest tests in the MVGVT series used the ET test article mated to the *Enterprise*. The LO2 tank contained deionized water and the LH2 tank was pressurized but empty. The combined orbiter-ET was suspended by a combination of air bags and cables attached to the top of the Structural Dynamic Test Facility (Building 4550). This configuration was used to simulate the high altitude portion of ascent after SRB separation. A second series of vibration tests added a set of SRBs containing inert propellant to simulate lift-off conditions. "This marked the first time that a complete set of dimensionally correct elements of the space shuttle had been assembled together."[99] The test series in the lift-off configuration was completed on September 15, 1978, and in the burn-out configuration on December 5. The final series of vibration tests, initiated in January 1979, used a configuration similar to the second series, except that the SRBs were empty.

Orbital Test Flight Program: 1981-1982

The first orbiter intended for space flight, *Columbia* (OV-102*)*, arrived at KSC from Palmdale in March 1979. Originally scheduled to lift off in late 1979, the launch date was delayed by problems with both the SSME components as well as the thermal protection system (TPS). Upon its arrival at KSC, the orbiter was missing thousands of tiles, main engines, auxiliary power units (APUs), on-board computers, and fuel cells. About six months of assembly work needed to be done. As the result of changed requirements for increased tile strength ("densification"), for twenty months technicians at KSC worked three shifts per day, six days per week installing, testing, removing and reinstalling approximately 30,000 tiles. *Columbia* spent 610 days in the Orbiter Processing Facility (OPF), another thirty-five days in the Vehicle Assembly Building (VAB), and 105 days at Launch Complex (LC) 39A before her maiden launch.

In early November 1980, the work on the TPS was completed, the ET was mated to the SRBs, and the three SSMEs were installed. The Orbiter *Columbia* was mated to the ET and SRBs in the VAB on November 26, and powered up on December 4. Preparations for rollout and ordnance installation were begun on December 19, and ten days later, *Columbia* was transported aboard the Mobile Launcher Platform (MLP) from the VAB to Pad A of Launch Complex 39. Commanded by John W. Young and piloted by Robert L. Crippen, STS-1, the first orbital test flight and first SSP mission, finally began at 7:00 a.m. Eastern Standard Time on April 12, 1981 (Figure No. A-12). *Columbia* returned on April 14, completing her historic mission at Edwards AFB. This initial mission, which lasted two days, six hours, twenty minutes, and fifty-three seconds, demonstrated *Columbia's* ability to fly into orbit, conduct on-orbit operations, and return safely.[100] *Columbia* flew three additional test flights in 1981 and 1982, as summarized in the table that follows, all with a crew of two. On March 30, 1982, at the completion of STS-3, *Columbia* landed at White Sands Missile Range (at NASA's White Sands Space Harbor) in New Mexico because of flooding of the Edwards AFB runway due to heavy rains (Figure No. A-13). This event marked the only time in the history of the SSP that the orbiter landed at White Sands.

---

[99] Jenkins, *Space Shuttle*, 213.
[100] Jenkins, *Space Shuttle*, 268.

Orbital Test Flights

Flight	Launch	Landing	Duration	Notes
STS-1	April 12, 1981	April 14, 1981	54 hr., 20 min.	16 tiles lost and 148 damaged
STS-2	Nov. 12, 1981	Nov. 14, 1981	54 hr., 13 min.	First test of Remote Manipulator System
STS-3	March 22, 1982	March 30, 1982	192 hr., 4 min.	Landed at White Sands Missile Range
STS-4	June 27, 1982	July 4, 1982	169 hr., 9 min.	First concrete runway landing

The Orbital Test Flight Program ended in July 1982 with 95 percent of its objectives completed. After the end of the fourth mission, President Ronald Reagan declared that with the next flight the shuttle would be "fully operational."

Operational Flights

STS-5, which began with the liftoff of *Columbia* on November 11, 1982, marked the first operational flight of the SSP. The mission, which lasted 122 hours and fourteen minutes, ended on November 16 with a landing at Edwards AFB. *Challenger* (OV-099) was added to the shuttle fleet in 1982, and made her first flight (STS-6) in April 1983. *Discovery* (OV-103) and *Atlantis* (OV-104) were delivered to KSC in November 1983 and April 1985, respectively. *Discovery* made her maiden flight (STS-41D) on August 30, 1984; the first space flight of *Atlantis* (STS-51-J) took place on October 3, 1985. Between 1982 and 1985, *Columbia*, *Challenger*, *Discovery*, and *Atlantis* collectively averaged four to five launches per year. Despite the 1970s projections of a maximum of sixty launches per year, in reality the nine flights in 1985 were a milestone for the SSP. All of the launches, from 1982 through 1985, were made from LC 39A at KSC, and all but six missions ended with landings at Edwards AFB.

Starting with STS-1 and continuing through STS-9, shuttle missions were numbered sequentially. Beginning with the tenth flight, a new system was introduced. The first digit designated the last digit of the FY (which starts on October 1) in which the mission was scheduled to launch. The second digit designated the launch site, with "1" for KSC and "2" for Vandenberg. Next, an alphabetical designation indicated the sequential position of the launch. For example, STS-41B was the second launch of FY 1984 from KSC. After the *Challenger* (STS-51L) accident in January 1986, this numbering system was abandoned, and NASA returned to a sequential numbering system.[101] This change coincided with the termination of Vandenberg as a launch site. Since STS-51L had been the twenty-fifth launch of the SSP, the designated return to flight on September 29, 1988, was numbered STS-26.

[101] Sometimes flights were launched out of sequence. This was mainly due to scheduling impacts such as bad weather and technical problems.

The *Challenger* Accident and Aftermath

On January 28, 1986, seventy-three seconds after the launch of *Challenger*, the spacecraft was destroyed, and the seven astronauts, Commander Francis R. Scobee; Pilot Michael J. Smith; Mission Specialists Ellison S. Onizuka, Judith A. Resnik, and Ronald E. McNair; and Payload Specialists George B. Jarvis and Sharon Christa McAuliffe, the first teacher selected to fly in space, all perished. Following this tragedy, the SSP was suspended for approximately two and one-half years. President Reagan formed a thirteen-member commission to investigate the cause of the accident. The Presidential Commission on the Space Shuttle *Challenger* Accident, known as the Rogers Commission after its chairman, William P. Rogers, was tasked with reviewing the images (video, film, and still photography), telemetry data, and debris evidence. As a result, the commission concluded:

> *The consensus of the Commission and participating investigative agencies is that the loss of the Space Shuttle Challenger was caused by a failure in the joint between the two lower segments of the right Solid Rocket Motor. The specific failure was the destruction of the seals that are intended to prevent hot gases from leaking through the joint during the propellant burn of the rocket motor. The evidence assembled by the Commission indicates that no other element of the Space Shuttle system contributed to this failure.*[102]

In addition to identifying the cause of the *Challenger* accident, the Rogers Commission report, issued on June 6, 1986, included a review of the SSP. The report concluded "that the drive to declare the Shuttle operational had put enormous pressures on the system and stretched its resources to the limit."[103] In addition to mechanical failure, the Commission noted a number of NASA management failures that contributed to the catastrophe. Nine basic recommendations were made. As a result, among the tangible actions taken were extensive redesign of the SRBs and the SRMs; upgrading of the space shuttle tires, brakes, and nose wheel steering mechanisms; the addition of a drag chute to help reduce speed upon landing; the addition of a crew escape system; and the requirement for astronauts to wear pressurized flight safety suits during launch and landing operations. Other changes involved reorganization and decentralization of the program. Experienced astronauts were placed in key NASA management positions, all documented waivers to existing flight safety criteria were revoked and forbidden, and a policy of open reviews was implemented.[104] In addition, NASA adopted a flight schedule with a reduced average number of launches, and discontinued the long-term practice of launching commercial and military payloads.[105]

---

[102] Jenkins, *Space Shuttle*, 279.
[103] Columbia Accident Investigation Board (CAIB), *Report, Volume I* (Washington, DC: US Government Printing Office, 2003), 25, http://history.nasa.gov/columbia/CAIB_reportindex.html.
[104] Cliff Lethbridge, "The Challenger Legacy," 2000, http:// http://spaceline.org/challenger.html.
[105] Lethbridge, "The Challenger Legacy."

In the aftermath of the *Challenger* accident, and following the recommendation of the Rogers Commission for organizational change, NASA moved the management of the SSP from JSC to NASA Headquarters, with the aim of preventing communication deficiencies.[106] In addition, an exhaustive investigation by a Senate subcommittee resulted in the cancellation of the DoD's plans to activate the VLS in California, leaving the US without a manned polar launch capability. The subcommittee outlined potential technical and structural problems at Vandenberg that would further delay a West Coast shuttle launch until mid-1989. Prior to this time, during late 1984 and early 1985, the site was used for a series of flight verification tests using *Enterprise. Discovery* was to fly the first mission from the VLS in 1986, and was awaiting transport to California when the *Challenger* accident occurred. Subsequently, all launch preparations were suspended.[107] The facilities were ordered mothballed in 1988, and the SSP at Vandenberg was officially terminated in December 1989. Though $4 billion was spent, no flight orbiters ever visited.[108]

In July 1987, NASA awarded a contract to Rockwell for construction of OV-105, *Endeavour,* to replace *Challenger*. To build the new orbiter, Rockwell used structural spares previously constructed between 1983 and 1987 under contract with NASA. Assembly of OV-105 was completed in July 1990, and the orbiter was delivered to KSC in May 1991; *Endeavour* launched on its maiden flight (STS-49) on May 7, 1992.

Return to Flight

The launch of *Discovery* (STS-26) from KSC LC 39B on September 29, 1988, marked a Return to Flight (RTF) after a thirty-two-month hiatus in manned spaceflight following the *Challenger* accident. STS-26 carried a crew of five and a Tracking and Data Relay Satellite (TDRS).[109] The problem in the design of the SRMs that had caused the loss of *Challenger* had been found and corrected. Many other critical flight systems had been re-examined and recertified. The years following the STS-26 flight "were among the most productive in the Shuttle's history, as a long backlog of payloads finally made it to the launch pad."[110] Starting with the RTF, the average number of missions increased from four to five to six yearly; 1992 through 1997 were the most productive, with seven or eight yearly missions. On February 3, 1995, a program milestone was reached when *Discovery* (STS-63) became the first orbiter to complete twenty missions.

Space Station Programs: *Mir* and the ISS

On July 31, 1991, President George H.W. Bush and Russian Premier Mikhail Gorbachev formally agreed that an American astronaut would reside on *Mir* for up to six months, and a Russian cosmonaut would fly on the Space Shuttle as part of the Manned Flight Joint Working

[106] CAIB, *Report Volume I*, 101.
[107] Jenkins, *Space Shuttle* , 217.
[108] Jenkins, *Space Shuttle*, 155, 217, 467-476.
[109] Williamson, "Developing the Space Shuttle," 186.
[110] Tony Reichhardt, ed., *Space Shuttle, The First 20 Years* (Washington, DC: Smithsonian Institution, 2002), 65.

Group. In October 1992, a second agreement was made between the space agencies of the two countries which outlined a plan for a US Space Shuttle to dock with *Mir*, and for an exchange of cosmonauts and astronauts on each others' human spaceflight missions.[111] Following a summit in Vancouver, Canada, convened in September 1993, both the US and Russia signed an agreement which instructed NASA and the Russian Space Agency to develop, by November 1, 1993, a detailed plan of activities for the space station.[112] A proposed three-phase approach for the new International Space Station (ISS) Program resulted from the summit. Phase I (1994 to 1997) was set as a joint Space Shuttle-*Mir* program. In Phase II (1998-2000), a station core was to be assembled using a US-built node, lab module, central truss and control moment gyros, and an interface for the shuttle. Russia was to build the propulsion system, initial power system, and an interface for Russian vehicles, as well as to provide crew-return vehicles. Canada was given responsibility for the construction of a remote manipulator arm. Phase III (2001-2004) called for the completion of the station with the addition of US modules, power system, and attitude control, and Russian, Japanese, and European Space Agency (ESA) research modules and equipment.[113]

In February 1994, the joint US/Russian, Space Shuttle-*Mir* Program was initiated with NASA's STS-60 mission, when Sergei Krikalev became the first Russian cosmonaut to fly on a shuttle. The first approach and flyaround of *Mir* took place on February 3, 1995, with cosmonaut Vladimir Titov aboard *Discovery* (STS-63); the first *Mir* docking was in June 1995 (STS-71).[114] In November of that year, *Atlantis* (STS-74) delivered and permanently attached a Docking Module to the *Kristall* module's androgynous docking unit, thus serving to improve clearance between the shuttle and the station for subsequent docking missions.

During the three-year Space Shuttle-*Mir* Program, from June 27, 1995, to June 2, 1998, the orbiter docked with *Mir* nine times (Figure No. A-14). In 1995, Norman E. Thagard, M.D., became the first American astronaut to live aboard the Russian space station. Arriving aboard the Russian Soyuz TM-21, Dr. Thagard stayed on *Mir* for 115 days. Over the next three years, six more US astronauts served tours on *Mir*. In 1998, the last NASA astronaut to reside on *Mir*, Andy Thomas, returned to Earth aboard *Discovery* (STS-91). The Space Shuttle served as a means of transporting supplies, equipment, and water to the space station; shuttle astronauts performed a variety of mission tasks, many of which involved earth science experiments. The Space Shuttle-*Mir* Program served to acclimate the astronauts to living and working in space, and many of the activities carried out on *Mir* were types they would perform on the ISS.[115]

---

[111] Roger D. Launius, S*pace Stations, Base Camps to the Stars* (Washington, DC: Smithsonian Institution, 2003), 152; Reichhardt, *Space Shuttle*, 85. *Mir* was launched by the Russians in February 1986 and remained in orbit until March 2001.
[112] "Space cooperation agreement allows two years' time on Mir," *Space News Roundup*, September 13, 1993: 3.
[113] Launius, S*pace Stations*, 176-181.
[114] NASA KSC, "STS-63. Mission Archives," December 30, 2011, www.nasa.gov/mission_pages/shuttle/shuttlemissions/archives/sts-63.html; NASA KSC, "STS-71. Mission Archives," November 23, 2007, www.nasa.gov/mission_pages/shuttle/shuttlemissions/archives/sts-71.html.
[115] Judy A. Rumerman, with Stephen J. Garber, *Chronology of Space Shuttle Flights 1981-2000* (Washington, DC:

On-orbit assembly of the ISS officially began in November 1998, when *Zarya*, built by Russia and financed by the US, was launched by a Russian Proton rocket from the Baikonur Cosmodrone in Kazakhstan.[116] This pressurized module provided orientation control, communications, and electrical propulsion for the station until the launch of additional modules. The late delivery of this initial element delayed the launch of subsequent ISS modules.[117] The US-built *Unity* Node 1 connecting module, along with two pressurized mating adapters (PMAs), was launched from KSC aboard *Endeavour* (STS-88) in December 1998 (Figure No. A-15). Built by The Boeing Company at the MSFC, the six-sided *Unity* connector module supplied essential ISS resources such as fluids, environmental control and life support systems, as well as electrical and data systems, to the working and living areas of the station.[118] *Unity* was connected to the orbiting *Zarya* by *Endeavour*'s crew on December 6, 1998. As noted by Ray A. Williamson, delivery of the first US-built element to the station marked, "at long last the start of the Shuttle's use for which it was primarily designed – transport to and from a permanently inhabited orbital space station."[119] The twenty-sixth flight of *Discovery* (STS-96), launched on May 27, 1999, was the first mission to dock with the ISS.

A nineteen-month hiatus followed the mating of *Zarya* and *Unity* because of Russian delays in building the *Zvezda* Service Module. Until delivery and installation of this key module, the ISS could not be inhabited without a shuttle present. *Zvezda* finally was launched on July 25, 2000, and mated with *Zarya* and *Unity*. The 42,000-pound module, similar in layout to *Mir*, provided living quarters, life support systems, electrical power distribution, data processing systems, and flight control and propulsions systems, including remote control capabilities.[120] In October 2000, the crew of *Discovery* (STS-92) delivered and connected the Z-1 Truss and the third PMA. The ISS was then officially declared ready for occupancy. One month later, the Port 6 (P6) Truss, fitted with the first set of solar arrays, was launched by *Endeavour* (STS-97). P6 was temporarily installed on top of the Z-1 Truss to provide power to the station while the remainder of the integrated truss system was completed (Figure No. A-16).

NASA History Division, 2000), 3.

[116] Launius, S*pace Stations*, 185-187; NASA JSC, *The Zarya Control Module: The First International Space Station Component to Launch*, NASA Facts (Houston: Johnson Space Center, 1999). http://spaceflight.nasa.gov/spacenews/factsheets/pdfs/zarya.pdf.

[117] As reported by Roger Launius (S*pace Stations*, 181-182), Russia was responsible for critical station modules that would derail the program if not delivered on time. As the costs for critical Russian components increased over budget, and failed to meet the schedule, the timeframe for the ISS was delayed.

[118] NASA JSC, *Unity Connecting Module: Cornerstone for a Home in Orbit. The First US-Built International Space Station Component*, NASA Facts (Houston: Johnson Space Center, January 1999). http://spaceflight.nasa.gov/spacenews/factsheets/pdfs/unity.pdf.

[119] Williamson, "Developing the Space Shuttle," 191.

[120] NASA JSC, *The Service Module: A Cornerstone of Russian International Space Station Modules*, NASA Facts, (Houston: Johnson Space Center, 1999). http://spaceflight.nasa.gov/spacenews/factsheets/pdfs/servmod.pdf.

The next major ISS component, the US-built *Destiny* Laboratory Module, arrived in February 2001, aboard *Atlantis* (STS-98). The *Destiny* module is used for research in life sciences, microgravity sciences, and Earth and space sciences research (Figure No. A-17). The astronaut crew arriving aboard *Discovery* (STS-102) in March 2001, attached and unloaded the first Multi-Purpose Logistics Module (MPLM), *Leonardo*. *Leonardo* and two other MPLMs, *Donatello,* and *Raffaello,* were built by the Italian Space Agency in Turin, and are owned by the US. The three pressurized modules were filled with racks that carried equipment, experiments, and supplies to and from the station aboard the Shuttle. They had components that provide limited life support, as well as fire detection and suppression, electrical distribution, and computer functions.

Endeavour (STS-100) delivered the Canadarm 2 in April 2001. Three months later, the Joint Airlock *Quest* arrived, which enabled the US astronauts to perform spacewalks without the Space Shuttle present. On September 15, 2001, the Russian *Pirs* Docking Compartment, launched aboard a Russian spacecraft, provided the ISS with additional spacewalking support and docking capabilities. Starboard Trusses (S0 and S1) were delivered aboard *Atlantis* (STS-110 and STS-112) in April and October 2002 (Figure No. A-18), respectively, followed by the P1 Truss in November 2002. At this point, approximately 45 percent of the station had been delivered and assembled. However, after the addition of the P1 Truss during the *Endeavour* (STS-113) mission, the configuration of the ISS was "frozen" at this stage for several years as the US SSP recovered from the *Columbia* accident.

Columbia Accident and Aftermath

On January 16, 2003, *Columbia* (STS-107) launched from LC 39A carrying a crew of seven, including the first Israeli astronaut. The landing was set for February 1, following a sixteen-day mission. Sixteen minutes prior to its scheduled touchdown at KSC, the spacecraft was destroyed during reentry over eastern Texas. All members of the crew, Commander Rick Husband; Pilot William McCool; Mission Specialists Dave Brown, Kalpana Chawla, Mike Anderson, and Laurel Clark; and Israeli Payload Specialist Ilan Ramon, were killed.

The SSP suffered its second major setback since the loss of *Challenger*, and again, was faced with explaining what had gone horribly wrong. A seven-month investigation ensued, including a four month search to recover debris. The *Columbia* Accident Investigation Board (CAIB) determined that the physical cause of the accident was a breach in the TPS on the leading edge of the left wing. This resulted from a piece of insulating foam, which separated from the ramp section of the ET after launch, and struck the wing in the vicinity of Reinforced Carbon-Carbon (RCC) panel no. 8. During reentry, this breach "allowed superheated air to penetrate through the leading edge insulation and progressively melt the aluminum structure of the left wing, resulting in a weakening of the structure until increasing aerodynamic forces caused loss of control, failure of the wing, and break-up of the Orbiter."[121]

[121] CAIB, *Report* Volume I, 9.

NASA spent more than two years researching and implementing safety improvements for the orbiters, SRBs, and ET. In the aftermath of the *Columbia* accident, the Space Shuttle fleet was grounded, and construction on the ISS was placed on hold. All access to and from the station was by way of the Russian-built Soyuz capsule. During the two-year period spanning 2003 to 2005, Russia flew fourteen resupply and crew rotation missions until *Discovery's* STS-114 RTF mission launched on July 26, 2005.[122]

On March 2, 2006, the international partners approved a new assembly sequence that dedicated the sixteen remaining shuttle flights to launching ISS elements. Truss segments P3/P4 and P5, as well as S3/S4 and S5, were delivered in 2006 and 2007. *Discovery* (STS-120) launched on October 23, 2007, carrying the Italian-built *Harmony* Node 2. This module increased crew living and working space; provided connecting ports for supply vehicles and the shuttle; and provided a passageway between the US *Destiny* lab, the Japanese *Kibo* Experiment Module, and the ESA-built *Columbus* Laboratory. The *Kibo* and *Columbus* modules, as well as the Canadian-built robotic device *Dextre*, arrived at the station in early 2008.

The last major US truss segment, S6, and the final pair of power-generating solar array wings, were delivered to the station aboard *Discovery* (STS-119) in March 2009. The same year, the *Kibo* Japanese Experiment Module Exposed Facility and Experiment Logistics Module Exposed Section were delivered aboard *Endeavour* (STS-127). The module provides an environment in which astronauts can conduct microgravity experiments. The exposed facility is a platform outside the module where Earth observation, communication, scientific, engineering, and materials science experiments are performed.[123]

In February 2010, the *Tranquility* Node 3 and its cupola were delivered aboard *Endeavour* (STS-130). The node and viewing port were built by the Italian company Thales Alenia Space and commissioned by the ESA.[124] The *Tranquility* node provides needed space and a centralized home for the station's environmental control equipment, as well as other essential services. By April 2010, following the conclusion of *Discovery's* (STS-131) mission, the non-Russian segment of the ISS was virtually complete. In May, *Atlantis* (STS-132) delivered the Russian-built Mini-Research Module (MRM) 1 *Rassvet*. MRM 2 *Poisk* was delivered earlier, in November 2009, aboard a Russian spacecraft. The *Rassvet* was used for science research and cargo storage. It also provided an additional docking port for Russian Soyuz and Progress transport vehicles.[125] In February and May, 2011, *Discovery* (STS-133) and *Endeavour* (STS-

---

[122] Launius, S*pace Stations*, 214-216.
[123] NASA, "Kibo Japanese Experiment Module," 2007, http://www.nasa.gov/mission_pages/station/structure/elements/jem.html.
[124] Thales Group, "A Room with a View: Node Tranquility and the Cupola, Both Supplied by Thales Alenia Space, Are Ready for Launch to Complete the ISS Assembly," news release, February 4, 2010, www.thalesgroup.com/Pages/PressRelease.aspx?id=11582.
[125] NASA MSFC, "A New "Dawn" in Space," May 14, 2010. www.nasa.gov/mission_pages/station/science/10-051.html.

134) delivered the permanent Multipurpose Module *Leonardo* and the Express Logistic Carrier 4, followed by the Express Logistic Carrier 3 and Alpha Magnetic Spectrometer 2, respectively.

By the close of the SSP, the three US Space Shuttles, *Discovery*, *Atlantis*, and *Endeavour*, had delivered all but three of the major station elements to the ISS. Additionally, the shuttles transported *Leonardo*, *Raffaello*, and *Donatello* to and from the ISS, as well as four of the first five Expedition crews, between March 2001 (Expedition 2; STS-102) and June 2002 (Expedition 5; STS-111).[126]

There has been a continuous human presence on the ISS since November 2000. In the aftermath of the *Columbia* accident, the ISS crew size was reduced from three to two, and instead of a three month period of residency, all crew were scheduled to stay for approximately 180 days. Expedition 12, launched on September 30, 2005, was the last two-person crew; Expedition 13, launched on March 29, 2006, marked a return to the three-person long duration crew. Expedition 20, in May 2009, marked a new milestone with the first permanent crew of six people. Also, with the arrival of Expedition 20, all participating space agencies had a representative on the ISS for the first time.

Orbiter Milestones, Missions and Payloads

Orbiter Milestones

A total of 135 Space Shuttle missions were launched from the KSC between April 1981 and July 2011. As summarized in the tables below, at the close of the SSP, *Discovery* was the orbiter fleet leader with a total of thirty-nine launches. *Atlantis* completed thirty-three missions, and twenty-five were flown by *Endeavour*.

[126] The Russian Soyuz launched the first Expedition crew to the ISS on October 30, 2000 (Launius, S*pace Stations*, 192-193; NASA JSC, *Flight 2R: First Crew On the International Space Station*, NASA Facts (Houston: Johnson Space Center, 1999), http://spaceflight.nasa.gov/spacenews/factsheets/pdfs/flt2r.pdf.

Tabulation of Space Shuttle Missions by Year and Orbiter, 1981 through 2011

Year	OV-102 *Columbia*	OV-099 *Challenger*	OV-103 *Discovery*	OV-104 *Atlantis*	OV-105 *Endeavour*	Yearly Total
1981	2					2
1982	3					3
1983	1	3				4
1984		3	2			5
1985		3	4	2		9
1986	1	1				2
1987						0
1988			1	1		2
1989	1		2	2		5
1990	2		2	2		6
1991	1		2	3		6
1992	2		2	2	2	8
1993	2		2		3	7
1994	2		2	1	2	7
1995	1		2	2	2	7
1996	3			2	2	7
1997	3		2	3		8
1998	1		2		2	5
1999	1		2			3
2000			1	2	2	5
2001			2	2	2	6
2002	1			2	2	5
2003	1					1
2004						0
2005			1			1
2006			2	1		3
2007			1	1	1	3
2008			1	1	1	3
2009			2	2	1	5
2010			1	1	2	4
2011			1	1	1	3
Totals	28	10	39	33	25	135

Summary of Orbiter Vehicle Accomplishments[127]

Orbiter Vehicle (OV-)	*Challenger* OV-99	*Columbia* OV-102	*Discovery* OV-103	*Atlantis* OV-104	*Endeavour* OV-105	Totals
Total miles traveled	23,661,290	121,696,993	148,221,675	125,935,769	122,883,151	575,535,047
Total days in space	62	300	365	307	299	1,333 (3.6 years)
Total orbits	995	4,808	5,830	4,848	4,671	21,152
Total flights	10	28	39	33	25	135
Total crew members	60	160	252	207	173	852
Mir dockings	0	0	1	7	1	9
ISS dockings	0	0	13	12	12	37
Satellites deployed	10	8	31	14	3	66

Collectively, the five orbiters in the shuttle fleet circled the Earth 21,152 times, and travelled more than 575 million miles. The time in space was approximately 1,333 days, or 3.6 years. The fleet carried a total of 852 fliers, with many crew members making multiple flights. Three hundred fifty-five individuals representing sixteen different countries flew on shuttle flights. Two American astronauts, Jerry Ross and Franklin Chang Diaz, each flew on seven shuttle missions. Story Musgrave is the only astronaut to have flown all five shuttles. The shuttle docked with *Mir* nine times, and the ISS thirty-seven times; deployed sixty-six satellites; and retrieved, repaired, then re-deployed seven payloads.[128]

Missions and Payloads

The Space Shuttles flew several dedicated DoD missions, as well as launched a number of planetary and astronomy missions, including the Hubble Space Telescope (HST), the Galileo probe to Jupiter, Magellan to Venus, and the Upper Atmospheric Research Satellite. In 1984, the Solar Max satellite was retrieved, repaired, and reorbited. In the same year, two malfunctioning commercial communications satellites were retrieved in orbit and brought back to Earth; in 1985, another satellite was fixed in orbit.[129] In addition, a series of Spacelab research missions (1983-1998) carrying dozens of international experiments in disciplines ranging from materials science to plant biology were accomplished. Noteworthy missions and milestones of the SSP are described in the individual orbiter sections, as well as the *Discovery* narrative in Part II. A summary of DoD, Spacelab, and HST missions follows.

[127] NASA KSC, *Space Shuttle Era Facts*, NASA Facts (Florida: Kennedy Space Center, 2011), http://www.nasa.gov/pdf/566250main_2011.07.05%20SHUTTLE%20ERA%20FACTS.pdf ; NASA, "STS-135 Mission of Space Shuttle Atlantis by the Numbers," July 21, 2011, http://www.nasa.gov/topics/shuttle_station/features/135numbers.html.
[128] NASA KSC, *Space Shuttle Era Facts*.
[129] Rumerman, *Chronology of Space Shuttle Flights*, 2.

DoD Missions

STS-4, launched on June 27, 1982, carried the first classified DoD payload, the Cryogenic Infrared Radiance Instrumentation for Shuttle (CIRRUS) telescope, and several other small experiments. Controlled from the Air Force's Station in Sunnyvale, California, "this was the only NSS [National Security Space] mission where the NSS flight controllers talked directly to the shuttle crew."[130] Also in 1982, the DoD bought nine shuttle flights from NASA for $268 million; a tenth mission was purchased at a later date. Mission data is summarized in the table that follows. These flights, managed by the Air Force, were mainly to launch classified payloads including experimental, radar imaging, communications, and early warning satellites. For the DoD flights, "flight controllers at KSC and JSC used secure launch and flight control rooms separate from rooms used for non-DoD flights to protect the classified nature of these missions."[131] The first completely classified, DoD-dedicated flights began in 1985 with STS-51-C, launched in January; the last dedicated military payload was carried aboard *Discovery* on STS-53, launched in December 1992. Due to the nature of these payloads, little information is publicly available.[132] STS-39, launched in April 1991, marked the first time that flight details were released to the public. The focus of this mission was Strategic Defense Initiative research into sensor designs and environmental phenomena.[133] The next dedicated DoD flight, STS-44, flown in November 1991, deployed a Defense Support Program satellite "designed to detect nuclear detonations, missile launches, and space launches from geosynchronous orbit."[134] This mission marked the end of shuttle flights for non-NASA military payload specialists. Between 1982 and 1992, NASA and the DoD-related National Security Space programs completed eleven missions. However, after the *Challenger* accident, NASA made the decision to end dedicated DoD missions.

In addition to the payloads on DoD-dedicated flights, more than 250 military payloads and experiments flew on ninety-five other shuttle missions.[135] In the Appendix to *Wings in Orbit*, a total of eighty-nine flights are listed as carrying DoD payloads.[136] This comprises roughly two-thirds of all SSP flights.

---

[130] Jeff DeTroye, et al., "National Security," in *Wings in Orbit: Scientific and Engineering Legacies of the Space Shuttle, 1971-2010*, ed. Wayne Hale (Washington, DC: US Printing Office, 2010), 46.
[131] Jennifer Ross-Nazzal and Dennis Webb, "Major Milestones," in *Wings in Orbit*, 20; DeTroye, et al., "National Security," 47.
[132] Jenkins, *Space Shuttle*, 328.
[133] DeTroye, et al., "National Security," 47.
[134] DeTroye, et al., "National Security," 47.
[135] DeTroye, et al., "National Security," 49.
[136] Hale, *Wings in Orbit*, Appendix, 527-529.

Summary of Dedicated Department of Defense Missions[137]

Flight	Orbiter	Launch Date	Payload	Comments
STS-51-C	*Discovery*	Jan. 24, 1985	ORION-1, an eavesdropping satellite for signals intelligence	The first dedicated, classified DoD mission.[138]
STS-51-J	*Atlantis*	Oct. 3, 1985	Pair of Defense communications satellites	
STS-27	*Atlantis*	Dec. 2, 1988	LACROSSE-1 radar imaging satellite (speculation only)	First post-*Challenger* military mission
STS-28	*Columbia*	Aug. 8, 1989	SDS B-1, a Satellite Data System spacecraft for relaying imagery from spy satellites	
STS-33	*Discovery*	Nov. 22, 1989	ORION-2, an eavesdropping satellite (unconfirmed)	Mission Specialists Story Musgrave and Kathy Thornton were the only civilians ever assigned to secret missions.
STS-36	*Atlantis*	Feb. 28, 1990	MYSTY (var. MISTY), a reconnaissance satellite	
STS-38	*Atlantis*	Nov. 15, 1990	SDS-B2, probably a data relay satellite	
STS-39	*Discovery*	April 28, 1991	AFP-675, a reflight of the CIRRUS military payload flown on STS-4, and UHS, the Ultraviolet Horizon Scanner)	This mission was declassified before launch, making it the first unclassified DoD mission.
STS-44	*Atlantis*	Nov. 24, 1991	Defense Support Program (DSP) F-16 ("Liberty"), a satellite for early warning of missile launching.	Last of the original nine DoD flights. Declassified months before launch.
STS-53	*Discovery*	Dec. 2, 1992	SDS B-3, assumed to be a data relay satellite	The final dedicated DoD mission; partially classified.

Spacelab: 1983-1998

On September 24, 1973, the ESA and NASA signed a Memorandum of Understanding, agreeing to design and develop Spacelab. The decision to develop Spacelab "resulted almost entirely from Germany's strong desire to get involved in manned space flight, and its willingness to finance 52 percent of Spacelab's costs."[139] Spacelab was a manned, reusable, microgravity laboratory flown into space in the rear of the Space Shuttle cargo bay. It was developed on a modular basis, allowing assembly in a dozen arrangements depending on the specific mission requirements.[140]

---

[137] Jenkins, *Space Shuttle*, 328-331; Michael Cassutt, "Secret Space Shuttles," in *Air & Space* magazine, August 2009, 2, http://www.airspacemag.com/space-exploration/secret-space-shuttles.html.
[138] According to Michael Cassutt ("Secret Space Shuttles," 3), "for the first time in NASA history, there was no pre-launch public affairs commentary until nine minutes before liftoff. During the flight, the Air Force lifted the veil of secrecy only to admit that the payload was successfully deployed, and that an Inertial Upper Stage was used."
[139] Jenkins, *Space Shuttle*, 101.
[140] NASA, *NSTS Shuttle Reference Manual* (Florida: Kennedy Space Center, 1988), http://science.ksc.nasa.gov/shuttle/technology/sts-newsref/sts_asm.html.

MSFC was responsible for Spacelab development and missions, as well as payload control during missions. Actual construction of the Spacelab pressurized modules was started by ERNO-VFW Fokker in 1974. The first lab, LM1, was donated to NASA in exchange for flight opportunities for European astronauts. Later, NASA purchased LM2, the second lab. The first Spacelab mission, carried aboard *Columbia* (STS-9), began on November 28, 1983, and concluded December 8, 1983 (Figure No. A-19). As part of this mission, the first protein crystals were grown in space, the energy output of the sun was measured, and the effects of radiation and weightlessness were studied.[141]

Challenger flew the next three Spacelab missions, STS-51B, -51F, and -61A, between April and November 1985. Following a five-year hiatus in the aftermath of the *Challenger* disaster, the next Spacelab mission, STS-35 launched in December 1990, carried the astronomical observatory, ASTRO-1. Twenty-three Space Shuttle missions carried Spacelab hardware before the program was decommissioned in 1998. Spacelab flew the International Microgravity Laboratory, the Atmospheric Laboratory for Applications and Science, the US Microgravity Laboratory, and the Microgravity Science Laboratory, among other payloads.[142] In addition to astronomical, atmospheric, microgravity, and life sciences missions, Spacelab was used as a supply carrier to the HST[143] and the Soviet space station *Mir*. STS-90, launched in April 1998, was the last with a Spacelab payload. Known as Neurolab, it carried life-science experiments that sought to study the behavior of nervous systems in zero-gravity.[144] In 1998, the Spacelab program was retired since the experiments conducted on it could now be performed on the ISS.

Hubble Space Telescope

Calls for a telescope in orbit, far away from the lights emitted from Earth, began as far back as the 1920s. The proposal slowly gained traction in the decades following World War II. In 1978, a breakthrough was made when the US Congress appropriated funding for the Large Space Telescope and work got under way. It was renamed the Hubble Space Telescope in 1983 after astronomer Edwin Hubble. Originally slated to launch in 1983, setbacks delayed its debut until April 24, 1990, when *Discovery*, on its tenth flight (STS-31), deployed the telescope into orbit (Figure No. A-20). Two months later, an aberration was discovered in Hubble's primary mirror. Five Shuttle missions to repair and maintain the HST followed: STS-61 (*Endeavour*; December 1993; Figure No. A-21), STS-82 (*Discovery*; February 1997), STS-103 (*Discovery*; December 1999), STS-109 (*Columbia*; March 2002), and STS-125 (*Atlantis*; May 2009). Collectively, these

---

[141] Richard W. Orloff, ed., *Space Shuttle Mission STS-9 Press Kit*, November 1983, http://www.scribd.com/doc/19964486/NASA-Space-Shuttle-STS9-Press-Kit.
[142] NASA, "Spacelab Payloads on Shuttle Flights," 2007, http://www.nasa.gov/mission_pages/shuttle/launch/spacelab_shuttle.html.
[143] Kim Dismukes, "STS-103 Payloads Servicing Mission 3A Configuration," 2002, http://spaceflight.nasa.gov/shuttle/archives/sts-103/cargo/index.html.
[144] Heppenheimer, *Development of the Space Shuttle*, 48.

Shuttle missions extended the HST's operating life with the replacement of aging hardware. The installation of advanced science instruments also enhanced scientific capability.[145]

The first servicing mission (SM), SM1, made by the crew of *Endeavour* (STS-61) in December 1993, corrected the defect in the optics and installed new instruments. In February 1997, during SM2, new instruments were installed, which improved the HST's productivity. The third servicing mission was divided into two parts after the third of Hubble's six gyroscopes failed. SM3A in December 1999 (STS-103) included the installation of six new gyroscopes and other equipment. In March 2002, *Columbia's* STS-109 crew installed the Advanced Camera for Surveys. SM4, the fifth and final servicing mission, flown by *Atlantis* (STS-125) in May 2009, included the installation of two new scientific instruments, the Cosmic Origins Spectrograph and Wide Field Camera 3. Two failed instruments, the Space Telescope Imaging Spectrograph and the Advanced Camera for Surveys, were brought back to life by the first SSP on-orbit repairs.

Transition and Retirement

On January 14, 2004, President George W. Bush announced that in 2010, following completion of the ISS, the Space Shuttle would be retired after nearly thirty years of service.[146] The shuttle would not be upgraded to serve beyond this time. On the thirtieth anniversary of the maiden launch of the SSP, April 12, 2011, NASA Administrator Charles Bolden announced that the Space Shuttle fleet would be displayed permanently at institutions across the country. *Enterprise* will be moved from the Smithsonian's National Air and Space Museum's (NASM) Steven F. Udvar-Hazy Center in Chantilly, Virginia, to the Intrepid Sea, Air and Space Museum in New York. The Udvar-Hazy Center will become the new home for *Discovery*. *Endeavour* will go to the California Science Center in Los Angeles, and *Atlantis* will be displayed at the KSC Visitor Complex in Florida.[147]

Transition and Retirement (T&R) Flow

Prior to their relocation, each orbiter underwent safing and post-mission deservicing, in accordance with NSTS 60585, *Space Shuttle End State Safing Requirements Document*, prepared by The Boeing Company (see Figure Nos. A-22 through A-25 for representative photographs of the safing and deservicing process).[148] In addition, specific display site configuration work was

---

[145] NASA, "The Hubble Space Telescope Servicing Missions," 2010, http://hubble.nasa.gov/missions/info.php.
[146] Weekly Comp. Pres. Docs., Remarks at the National Aeronautics and Space Administration, Vol. 40, Issue 3 (January 19, 2004), http://www.gpo.gov/fdsys/pkg/WCPD-2004-01-19/content-detail.html.
[147] David Weaver, "NASA Announces New Homes For Shuttle Orbiters After Retirement," release: 11-107 (Washington, DC: NASA Headquarters, April 12, 2011), http://www.nasa.gov/home/hqnews/2011/apr/HQ_11-107_Orbiter_Disposition.html.
[148] NASA JSC, *Space Shuttle End-State Subsystems Requirements Document* (Houston: Johnson Space Center, September 10, 2010); William J. Roberts, interview by Jennifer Ross-Nazzal, *NASA STS Recordation Oral History Project*, August 25, 2010, 9, http://www.jsc.nasa.gov/history/oral_histories/STS-R/RobertsWJ/RobertsWJ_8-25-

performed, as per the requirements of the recipient museum. *Discovery* was the first Shuttle orbiter to complete T&R processing; *Endeavour* was the second, and *Atlantis* was the last.

The T&R flow began with Down Mission Processing (DMP), which required approximately two months for each of the three orbiters. This work was conducted in OPF-1 and OPF-2 at KSC. During this time, the Forward Reaction Control System (FRCS) module and Orbiter Maneuvering System (OMS) pods were removed, and sent to the Hypergolic Maintenance Facility for initial safing prior to transport to NASA's White Sands Test Facility in New Mexico for disassembly and removal of hypergolic propellants.[149]

Discovery underwent DMP in OPF-2 for four months, and then was transported to High Bay 4 of the VAB where it was stored for approximately one month while *Endeavour* was undergoing DMP in OPF-2. *Discovery* was then moved to OPF-1 for a series of final T&R activities. These End State Safing operations entailed the removal of all critical government equipment that cannot be permanently displayed with the orbiter. This included hazardous commodities and components.[150] A total of forty end-state safing and display requirements for nine subsystems were addresssed.

Next, specific display site operations configuration work was performed, per the requirements of the recipient museum. This two-stage process included the installation of replica shuttle main engines (RSMEs). The RSMEs are previously scrapped and cosmetically repaired nozzles installed into the aft of the retired orbiter via a newly-designed nozzle adapter. Pratt & Whitney Rocketdyne designed, manufactured, repaired and provided the nine RSME kits. The nine nozzles required cosmetic and structural repairs to the forward manifold adapter attach point, aft manifold and heat shield clips. The nozzle adapter was designed using Boeing dynamic load criteria for ferry flight.[151]

After a final power-down, the FRCS module and OMS pods, returned from White Sands, were installed. At the end of final display operations, the orbiter was considered "ready for ferry." Each orbiter was moved to the VAB for storage, until it was scheduled to be transported to its destination. The OMS pod engines were replaced with replicas before they were reattached to the Shuttle for public display.[152] From the VAB, *Discovery* and *Endeavour* were towed to the SLF and mated to the SCA. *Discovery* made its final ferry flight on April 17, 2012.[153] After the

---

10.htm.

[149] Steven Siceloff, "Retirement a New Beginning for Discovery," March 16, 2011, http://www.nasa.gov/mission_pages/shuttle/behindscenes/discoveryretire_prt.htm.

[150] Chris Gebhart, "*Endeavour* and *Discovery* swap places—New Retirement Dates Planned," August 11, 2011, http://www.nasaspaceflight.com/2011/08/endeavour-discovery-swap-places-new-retirement-dates-planned/.

[151] Chris Bergin, "Replica engines recommended for retired orbiters – Flown SSMEs for HLV," October 21, 2010, http://www.nasaspaceflight.com/2010/10/replica-engines-retired-orbiters-flown-ssmes-hlv/NASASpaceflight.com.

[152] Steven Siceloff, "Retirement a New Beginning for Discovery."

[153] Henry Taylor, interview by Jennifer Ross-Nazzal, *NASA STS Recordation Oral History Project*, August 26, 2011, http://www.jsc.nasa.gov/history/oral_histories/STS-R/TaylorHT/TaylorHT_8-26-11.htm; Chris Gebhart,

delivery of *Discovery*, the SCA ferried *Enterprise* to New York, on April 27, 2012 for display at the Intrepid Sea, Air and Space Museum. According to Henry Taylor, *Enterprise* probably will "sit on the SCA" for four to six weeks before the equipment arrives to take it off. After *Enterprise*, the SCA will go back to Edwards AFB and finally, in September 2012, the SCA will pick up *Endeavour* in Florida, and fly it to the Los Angeles International Airport in preparation for its transport to the California Science Center. At the final location, two large cranes will be used to help demate each orbiter from the SCA.[154]

T&R Processing Timetable (Planned)[155]

Activity	***Discovery***	***Endeavour***	***Atlantis***
Down Mission Processing	March 9 to mid-July 2011	June 1 through Mid-August 2011	July 21 through mid-October 2011
Storage in VAB	Mid-July 2011	Mid-August to mid-October 2011	Mid-October 2011
End State Safing	August to early November 2011	Mid-October 2011 through mid-March 2012	January- May 2012
FRCS/OMS pods shipped to White Sands for safing and processing			Mid-March 2012
Installation of RSMEs	Late October 2011	Early January 2012	Mid-May
Final power-down	Mid-October	Early February 2012	May 2012
Return of FRCS/OMS pods	Late October/early November 2011	Late March 2012	Mid-May to mid-June 2012
Display configuration ops, Part 2; installation of FRCS/OMS pods	November through mid-December 2011	Late March 2012	Early July through mid-September
Processing completed ("ready for ferry")	January 3, 2012	Mid-May 2012	Mid-September 2012
Storage in VAB	January 3 through April 10, 2012	Mid-May through July	Mid-September until February 2013
Roll out for transport; tow to SLF	April 10, 2012	August 2, 2012	February 1, 2013

As of late 2011, NASA planned to retain the SSMEs for potential later use. After all the orbiters are delivered, plans called for both SCAs to be transferred to the Stratospheric Observatory for Infrared Astronomy (SOFIA) Program; the SOFIA Program wanted the engines as spares, so the SCAs "probably won't fly anymore."[156] The SOFIA Program is a large infrared telescope in a 747, operated by DFRC out of the Palmdale Airport. The SCAs will not be modified.

"*Endeavour* and *Discovery* swap places."
[154] Chris Bergin, "Discovery's Elaborate Deservicing Plan Put Into Work Amid Managerial Praise," March 14, 2011, http://www.nasaspaceflight.com/2011/03/discoverys-deservicing-plan-work-amid-praise/.
[155] Chris Gebhardt, "Endeavour and Discovery swap places."
[156] Henry Taylor, interview, 16-17.

IB. Technical Development of the Space Transportation System

> *The Space Shuttle is the primary element of what once was to be an interrelated complex of a variety of spacecraft, called the Space Transportation System (STS). Even though most of the spacecraft once planned were never built, the title Space Transportation System has remained for what has mainly been a program to build the Space Shuttle.*[157]

The STS, commonly called the Space Shuttle (Figure No. A-26), was the first winged US spacecraft capable of launching crew vertically into orbit and landing horizontally upon return to Earth. The STS was comprised of four major elements: the reusable orbiter vehicle, which held the crew and payloads; three main engines, installed on the orbiter, which powered the orbiter into space; the large expendable ET, which held the propellants for the main engines; and a pair of reusable SRBs which provided initial ascent thrust for the vehicle. After the basic shuttle requirements were defined, each of the major elements experienced its own evolutionary path. Specific accomplishments and milestones in design, development, testing, production, and operations for the SSMEs, the ET, and the SRBs and SRMs, are contained in Parts III, IV, and V, respectively. Physical and functional descriptions for the major elements also are contained in these sections.

Phase C/D: Design, Development, Test, and Evaluation

By mid-1971, NASA was weighing the pros and cons of a phased approach to the development of the STS in which the orbiter vehicle would be developed first and initially tested with an interim expendable booster. While some preliminary booster design and development was conducted, full-scale hardware development of a reusable booster was started later.[158] NASA decided to sequence the development and testing of the system features. As a result, major contracts for each of the primary STS elements, including the orbiter vehicle, SSMEs, ET, SRMs, and SRBs were awarded separately.

Propulsion Element DDT&E Contracts

NASA awarded Phase C/D Design, Development, Test and Evaluation (DDT&E) contracts for the propulsion elements between April 1972 (SSME) and June 1974 (SRM); the contract for the ET was awarded in September 1973. The SRB was designed in-house by MSFC, and contracts for major SRB elements and systems, as well as assembly, were awarded during 1975 and 1976. The SSME was considered the "pacing component," and was developed in tandem with the orbiter.

---

[157] Guilmartin and Mauer, "A Shuttle Chronology," i.
[158] "NASA studies a new approach to developing Space Shuttle system," *Roundup*, July 2, 1971, 1.

Three firms were invited to prepare proposals for the SSME contract: Aerojet General, United Aircraft Pratt & Whitney, and North American Rockwell's Rocketdyne Division. The RFP was issued on March 1, 1971. NASA awarded the SSME contract (NAS8-27980) to the Rocketdyne Division, Canoga Park, California (later, Pratt & Whitney Rocketdyne); the contract, initially valued at $205,766,000, was signed on August 16, 1972; this contract predated the orbiter contract award.[159] Assembly of the first prototype main engine, SSME 0001, was completed on March 24, 1975. (See Part III for further information regarding the SSME.)

Following the orbiter and the SSME, the ET was the third major procurement for the STS. The RFP for DDT&E of the ET was released on April 2, 1973, to four aerospace firms: Boeing, Chrysler, Martin Marietta, and McDonnell Douglas. Martin Marietta (later, Lockheed Martin Space Systems Company) of New Orleans, Louisiana, the successful proposer, was awarded the $152,565,000 contract (NAS8-30300) on September 1, 1973.[160] Production of the ETs was started in late 1975, and in June 1979, the first flight-ready ET was completed. (See Part IV for further information regarding the ET.)

On July 16, 1973, the RFP for design and development of the SRM was issued to Aeroject Solid Propulsion, Lockheed, Thiokol, and United Technologies. NASA selected the Thiokol Chemical Company of Promontory, Utah, on June 26, 1974. The DDT&E contract (NAS8-30490) was valued at $226,397,814.[161] (See Part V for further information regarding the SRM.)

While MSFC designed the SRB in-house, in 1975 and 1976, the center awarded contracts for the design, development, and testing of major SRB systems and subsystems, including the multiplexers/demultiplexers (July 1975), SRB separation motors (August 1975), thrust vector control servoactuators (August 1975), SRB structures (August 1975), integrated electronic assemblies (September 1975), pyrotechnic initiator controllers (September 1975), deceleration systems (parachutes) (July 1976), as well as signal conditioners, frequency division multiplexers, and location aid transmitters, among others. The last major contract award (NAS8-32000), for SRB assembly, checkout, launch operations, and refurbishment, was awarded to United Space Boosters, Inc. (USBI) of Sunnyvale, California, in December 1976. (See Part V for further information regarding the SRB.)

Orbiter and Integration Systems

The RFP for development of the orbiters and integration systems was released on March 17, 1972. "As a design objective," the RFP stated, "the Space Shuttle System should be capable of use for a minimum of 10 years, and each Orbiter Vehicle shall be capable of low cost refurbishment and maintenance for as many as 500 reuses."[162] Following the study of many

[159] Whalen and McKinley, "Chronology," 21.
[160] Whalen and McKinley, "Chronology," 26.
[161] Whalen and McKinley, "Chronology," 29.
[162] NASA MSC, Space Shuttle Program Request for Proposal No. 9-BC421-67-2-40P (Huntsville, AL: MSFC

candidate concepts, the Space Shuttle system configuration, the RFP noted, was selected on the basis of development and per-flight operating costs. The RFP covered the DDT&E, plus production phases, divided into increments. Increment 1, representing approximately the first two years of DDT&E, included a detailed development program plan for components, subsystems, orbiter vehicle major structural elements, and support equipment, sufficient for proceeding with detailed design and hardware development. The balance of the DDT&E effort, Increment 2, included the development and delivery of two orbiter vehicles. The Production phase, Increment 3, covered the manufacture, test, and delivery of three additional orbiter vehicles, as well as an upgrade/retrofit of the first two development orbiter vehicles to operational status.[163] The scope in the RFP specified that proposals from joint ventures would not be accepted.[164]

The NASA Source Evaluation Board solicited eight firms for the orbiter DDT&E procurement; twenty-nine other firms requested and received copies of the RFP. Of these, only four companies submitted proposals: Grumman Aerospace Corporation, the Space Systems Division of Lockheed Missiles and Space Company, McDonnell Douglas Corporation, and the Space Division of North American Rockwell. All four had participated in previous feasibility and preliminary design studies.[165] A total of 416 people representing seven NASA Centers, NASA Headquarters, and the Air Force participated in the evaluation of proposals.[166] As a result, North American Rockwell (now The Boeing Company) was selected in July 1972 for negotiations leading to a contract to begin development of the space shuttle system. Rockwell's greatest advantage, according to the selection board, was in the area of management. This firm was selected over the others because it "attained the highest score from a mission suitability standpoint, because its cost proposal was lowest and credible, and because its approaches to program performance gave high confidence . . . it will indeed produce the Shuttle at the lowest cost."[167]

The estimated cost of the contract was $2.6 billion over about six years, with the first increment, valued at $540 million, to cover the initial two years.[168] NASA issued a letter contract on August 9, 1972, authorizing North American Rockwell to proceed with the development of the orbiter. The letter provided Rockwell the authority to proceed while a definitive contract was being negotiated. NASA obligated $12,300,000 as the initial funding under the contract (NAS9-14000).[169] A supplemental agreement (Increment 2, NAS9-14000, Schedule A) that formally incorporated the construction of OV-101 (*Enterprise*) and OV-102 (*Columbia*) was signed in

---

History Office, no date), IV-5.
[163] NASA Manned Spacecraft Center, Request for Proposal, 1-7 and 1-8.
[164] NASA Manned Spacecraft Center, Request for Proposal, 1-2.
[165] "Selection of Contractor for Space Shuttle Program," Sweetsir Collection, Box 67D.6, Folder 12, 9-72 (Florida: KSC Archives, September 18, 1972), 1-4.
[166] "Selection of Contractor," 3.
[167] "Selection of Contractor," 4.
[168] "NAR Selected for Shuttle Negotiations," *Marshall Star*, August 2, 1972: 2.
[169] "NASA and NR Ink Shuttle Pact," *Roundup*, August 18, 1972, 1.

October 1975.[170] The agreement represented work valued at approximately $1.8 billion and brought the estimated value of the orbiter contract to slightly over $2.7 billion.[171]

Following its selection as the prime contractor, Rockwell subcontracted a large percent of the work to about 240 subcontractors, suppliers, and vendors. Of these subcontracts, eighty-eight were in excess of $1 million, and nineteen had a value of $10 million or more.[172] Midway through 1975, some 34,000 workers in forty-seven states were employed in support of the SSP, working for NASA, the prime contractors, and the subcontractors. The buildup reached a peak of 47,000 during 1977.[173] Among the major subcontracts awarded by Rockwell were those to Grumman Aerospace Corporation in Bethpage, New York, for the design, fabrication, and testing of the orbiter wing, valued in excess of $40 million; to McDonnell Douglas, St. Louis, Missouri, for the orbital maneuvering system, valued at $50 million; to Republic Division of Fairchild Industries in Farmingdale, New York, for the vertical fin, valued at $13 million; and a $40 million contract for the mid-fuselage, awarded to the Convair Division of General Dynamics in San Diego, California.[174]

In January 1977, NASA issued a modification (Increment 3, NAS9-14000, Schedule B) to Rockwell's contract valued at $10,031,250. This agreement incorporated nine contract changes previously authorized by NASA "for configuration changes to the orbiter for the Approach and Landing Test, changes in definition of a quarter scale ground vibration test model and additional simulation efforts to cover support of Orbiter 102, the first Orbiter to be launched into space."[175] This supplement brought the estimated value of the Rockwell contract to $3.038 billion.

Increment 3, Production and Modification Contract NAS9-14000, Schedule B, issued in February 1979 and valued at $1.9 billion, governed the manufacture of OV-103 (*Discovery*) and OV-104 (*Atlantis*), the conversion of Structural Test Article (STA)-099 into the flight orbiter OV-099 (*Challenger*), as well as major modifications. The contract also called for modifications to OV-102 (*Columbia*), then under assembly.[176] Effective August 1, 1987, Rockwell completed contract negotiations to build OV-105 (*Endeavour*), the "replacement orbiter." The OV-105 contract (NAS9-17800), valued at $1.3 billion, specified a forty-five month work schedule, with orbiter delivery set on April 30, 1991. The last addition to the orbiter fleet would be assembled using existing structural spares, and incorporate all new technology, with the latest upgrades and modifications built in. A significant percentage of the work was to be performed by more than 100 subcontractors.[177]

---

[170] The Boeing Company, *Orbiter Vehicle Data Pack Document: Orbiter Vehicle Atlantis (OV-104), Volume I* (Huntington Beach, California: The Boeing Company, 2011), 20-26.
[171] "NASA Signs Pact for Two Orbiters," *Roundup*, October 10, 1975, 1.
[172] "First Shuttle Hardware Arrives," *X-Press*, March 28, 1975, 2.
[173] Heppenheimer, *Development of the Space Shuttle, 1972-1981*, 33.
[174] Heppenheimer, *Development of the Space Shuttle, 1972-1981*, 29.
[175] "NASA, Rockwell sign supplemental contract," *Roundup*, January 21, 1977, 1.
[176] "Contract Signed for Orbiters," *Marshall Star*, February 14, 1979, 2; Boeing, *OV-104, Volume I*, 20-26.
[177] "Rockwell secures contract to build replacement Orbiter," *Space News Roundup*, August 14, 1987, 1.

The contracts for orbiter development were followed by a series of Phase E Operations Support contracts, beginning with Increment 3, NAS9-14000, Schedule E. This Operations contract, which covered the period between 1981 and 1989, was succeeded by NAS9-18400 (1989-1994), NAS9-19000 Consolidated Contract (1994-1996), Space Flight Operations Contract (SFOC) NAS9-20000 (1996-2006), and Space Program Operations Contract (SPOC) NNJ06VA01C (2006-2015), and Transition and Retirement Contract NAS9-20000 (NNJ06VA01C; 2005-2015).[178]

The final SPOC, with United Space Alliance (USA), valued at $232.9 million, covered closeout contract modifications from October 1, 2011, through September 30, 2013.[179] It included the "safing" of the three extant orbiter vehicles for public display; ferry operations for *Discovery*, plus property and records disposition.

Test Articles and Orbiter Prototypes

Each NASA orbiter designation is composed of a prefix and a suffix separated by a dash. The prefix for operational orbiter vehicles is OV. The suffix is composed of two parts: the series and the vehicle number. The numbering is sequential, with the series beginning with a 0 for a non-flight ready orbiter and 1 for a flight-ready orbiter. OV-100 was never used, as it would read "Orbiter Vehicle Series 1 Vehicle 0." "STA" was used to designate a structural test article. As noted below, a few structural test articles were associated with OV numbers.

<u>OV-095</u>

The Shuttle Avionics Integration Laboratory (SAIL), located in Building 16 at JSC was also known as the Shuttle Test Station (STS) OFT (Orbital Flight Test) Test Article. Assigning this laboratory an orbiter vehicle number (STS OV-095) did not follow the OV naming protocol. Reportedly, the number was assigned by an IBM programmer to meet a SAIL software requirement. OV-095 has unofficially been referred to as a "bird without a skin." Rather than the SAIL facility proper, the "bird without a skin" more aptly describes the "Big Rig" located within the SAIL (Figure No. A-27). The "Big Rig" is a full-scale mockup of the orbiter minus the wings and landing gear, the latter of which is simulated. It contains all of the equipment and wiring (exposed), usually flight certified, found on the orbiter. The "Big Rig" was developed at JSC in 1974 to provide integration and verification of Space Shuttle hardware and software for flight. The "Big Rig" has numerous interfaces with external laboratories, including the Inertial Measurement Laboratory, the Electronic Systems Test Laboratory, the Software Production Facility, the Orbiter Data Record Center, the KSC Launch Processing System Checkout, Control,

[178] Boeing, *OV-104, Volume I*, 20-26.
[179] USA is a Limited Liability Company (LLC) equally owned by The Boeing Company and Lockheed Martin Corporation. It was formed in 1996 to consolidate more than thirty contracts supporting the SSP. "United Space Alliance," 2012, http://www.unitedspacealliance.com/about-USA.cfm.

and Monitor System, the Guidance Integration Test and Facility, the Payload Operations Control Center, and the Mission Control Center.[180]

STA-096 and STA-097

A Boeing Shuttle manager reported that STA-096 was an Environmental Control and Life Support System test article that was cancelled prior to delivery. However, the NASA History Office has no record of STA-096, and its current state and disposition are unknown. Similarly, while STA-097 is listed in NASA records as a Vibro Acoustic (Mid Fuselage) Test Article, the NASA History Office has no record of this structural test article.[181]

STA-098 (MPTA-098)

The Main Propulsion Test Article (MPTA), constructed by Rockwell, is named OV-098 in some NASA records. However, since it was a test article and does not fit the OV nomenclature for a non-flight ready orbiter, the reference to the MPTA as OV-098 appears to be incorrect and unofficial. It may have been reassigned as OV-098 when it was rebuilt into the Shuttle-C mockup during the 1990s.[182] The test article is more commonly referenced in documents as MPTA-098. The MPTA "consisted of an aft-fuselage, a truss arrangement which simulated the mid-fuselage, and a complete thrust structure including all main propulsion system plumbing and electrical systems."[183] It was mated with an ET (MPTA-ET) and three prototype SSMEs, and used between April 21, 1978, and the end of 1979, for propellant loading and static firing tests. It was last used on January 17, 1981, for static firing of flight nozzles. The MPTA is presently stored at NASA's SSC in Mississippi.

OV-098

There are many references to the *Pathfinder* Orbiter Weight Simulator as OV-098. While never formally numbered by NASA, the OV-098 designation was assigned unofficially and retroactively. The *Pathfinder* was designed and engineered by the Product Planning Branch, Fabrication Division of the Test Lab at MSFC, and assembled by the Mockup and Prototype Assembly Branch at MSFC in 1977. The nucleus of the structure was a scrapped Titan solid rocket motor case, with frames, collars, nose, tail structures, and wings added, and finished with aluminum sheeting for the outer skin. The simulator had roughly the same size, shape, weight, and center of gravity as an actual orbiter, and was used as a stand-in for *Enterprise* (OV-101).[184]

---

[180] ACI and Weitze Research, *NASA-Wide Survey and Evaluation of Historic Facilities in the Context of the US Space Shuttle Program: Roll-Up Report* (survey report, NASA Headquarters, February 2008), 3-3, 3-4.
[181] ACI and Weitze Research, *Roll-Up Report*, 3-4.
[182] ACI and Weitze Research, *Roll-Up Report*, 3-4.
[183] Jenkins, *Space Shuttle*, 225.
[184] Amos Crisp, "Homemade Orbiter To Make Practice Runs at Marshall," *Marshall Star*, November 23, 1977, 4.

It was first used at MSFC in order to fit-check the roads and facilities that were used during the MVGVT program, and also employed to test the hoisting system for lifting *Enterprise* (Figure No. A-11). In April 1978, the *Pathfinder* was shipped by barge to KSC and was used, until early 1979, to check out the Mate-Demate Device (MDD), OPF, and VAB work platforms. Fit-checks were performed in the OPF-1 to ensure that the work platforms were positioned correctly and would not hit the orbiter when used.[185] In addition, the *Pathfinder* was used to train ground crew in post-landing procedures at the KSC Shuttle Landing Facility (SLF). Following these operations, in late 1979, *Pathfinder* was returned to MSFC for storage. Years later, it was modified by Teledyne-Brown Engineering to more closely replicate an orbiter.[186] Subsequent to its display at the Great Space Shuttle Exposition in Tokyo, Japan, between June 1983 and August 1984, it was transferred to NASM. It is currently on display at the US Space & Rocket Center in Huntsville, Alabama, where it is mounted on the MPTA-ET, along with a pair of inert SRBs (whose nose segments and aft skirts were removed in 1999 and replaced by a set of mockups).

STA-099

STA-099, a high-fidelity structural test article, was built by Rockwell under the Increment 1, NAS9-14000 contract. Structural assembly was started on November 21, 1975, and final assembly was completed on February 10, 1978. Subsequently, Rockwell delivered STA-099 to the Lockheed Company at Palmdale (Figure No. A-28), where the test article underwent a year-long test program, concluded on October 4, 1979. Testing took place in a specially-built 430-ton steel rig, known as a reaction frame. The rig contained 256 hydraulic jacks that operated, under the control of a computer, to distribute loads across 836 application points. STA-099 was subjected to various simulated stress levels that duplicated the launch, ascent, on-orbit, reentry, and landing phases of flight.[187] Three 1-million pound-force hydraulic cylinders were used to simulate the thrust from the SSMEs, and heating and cooling simulations were also conducted using gaseous nitrogen to simulate the cold of space and heating blankets to simulate ascent and reentry heating. Thermal loads were applied directly to the metal structure. "In a separate test, the fuselage was given loads that simulated the impact of the nose landing gear on a runway."[188]

After testing was completed, STA-099 was returned to Rockwell on November 7, 1979, for conversion into OV-099 (*Challenger*).[189] The conversion process involved a major disassembly of the vehicle. The payload bay doors, elevons, body flap, vertical stabilizer, upper forward fuselage, and entire aft fuselage were removed and returned to their original vendors for modification.[190]

---

[185] Jenkins, *Space Shuttle*, 215.
[186] Jenkins, *Space Shuttle*, 215.
[187] Jenkins, *Space Shuttle*, 241; "Third Orbiter Passes Tests," *Marshall Star*, October 17, 1979,1 and 4.
[188] Heppenheimer, *Development of the Space Shuttle*, 252-256.
[189] The original plan was to prepare *Enterprise* (OV-101) for space, but conversion of STA-099 was more cost effective.
[190] Jenkins, *Space Shuttle*, 242.

OV-101

OV-101 was built by Rockwell under the NAS9-14000, Schedule A contract.[191] Structural assembly was started in June 1974 and completed in March 1976. Rollout from the Palmdale assembly facility was on September 17, 1976.[192] The first orbiter hardware to arrive in Palmdale was the mid-fuselage, shipped from the Convair plant in San Diego in March 1975.[193] Next were the orbiter wings, in May. Fabricated in Grumman's facilities on Long Island, New York, the wings were transported on a container ship through the Panama Canal to Long Beach, California, where Grumman trucked them overland to Palmdale.[194] Rockwell shipped the orbiter crew module, which fit inside the lower half of the forward fuselage, from Downey to Palmdale in December. Rockwell mated the orbiter's forward, mid, and aft fuselages with the spacecraft's wings and vertical tail by the end of 1975. Rockwell next moved its Apollo checkout equipment from Downey to Palmdale for adaptation to the shuttle orbiter.[195] In May 1976, a fiberglass nose cap was installed on OV-101 for use in the upcoming ALT program.

As a test article, OV-101 featured numerous substitute components as placeholders for the equipment found in vehicles built for actual space flight.[196] Late in the summer of 1976, Rockwell mounted three dummy SSMEs in the rearmost section of the orbiter (the "boattail); the simulated SSMEs were fabricated by Rockwell's Rocketdyne Division at Air Force Plant (AFP) 56 in Canoga Park, California.[197] In the weeks before rollout, Rockwell oversaw a horizontal ground vibration test at Palmdale to verify structural dynamics data for a full-sized orbiter. Tests in the early 1970s at Langley had used one-eighth-scale models to study the anticipated longitudinal oscillation frequencies, known as "pogo." A second round of model tests, at one-quarter scale, had been a joint effort of JSC and Rockwell in 1975.[198]

On January 31, 1977, OV-101 was moved overland from Palmdale to NASA's DFRC for use in the ALT Program, conducted between February and October 1977, as described in Part IA. Transport of the orbiter test vehicle, which weighed approximately 150,000 pounds, proceeded at about three miles per hour.[199] Following completion of the ALT test flights, OV-101 was used for vibration tests at the MSFC. Subsequently, it was moved to KSC where, between May through July 1979, NASA used OV-101 to verify the correct locations of maintenance platforms, and to check crew escape procedures.[200] Later that year, OV-101 was flown to California, and

---

[191] The Boeing Company, *Orbiter Vehicle Data Pack Document: Orbiter Vehicle Discovery (OV-103), Volume II* (Huntington Beach, California: The Boeing Company, 2011), 5.
[192] "Space Shuttle Orbiter 101 Rollout Set for Next Week," *Marshall Star* , September 8, 1976, 1 and 4.
[193] "First Shuttle Hardware Arrives," *X-Press*, March 28, 1975, 2.
[194] "Orbiter Wings to Arrive in Palmdale Today," *X-Press*, May 23, 1975, 2.
[195] "First Shuttle Orbiter Under Assembly," *Marshall Star*, December 3, 1975, 4; Heppenheimer, *Development of the Space Shuttle, 1972-1981*, 98.
[196] "Orbiter Gets A Nose Cap," *Marshall Star*, May 19, 1976, 7.
[197] "Space Shuttle Orbiter 101 Rollout Set for Next Week," *Marshall Star*, September 8, 1976, 1 and 4.
[198] Heppenheimer, *Development of the Space Shuttle*, 100, 251-252.
[199] "Enterprise Will Begin First Trip Next Monday," *Marshall Star*, January 26, 1977, 1 and 4.
[200] Jenkins, *Space Shuttle*, 216.

moved overland to Palmdale, where selected parts, including most of the cockpit instrumentation and consoles, the control sticks, and most of the avionics, were removed and refurbished in October 1979, for use on later orbiters.

In October 1982, NASA DFRC conducted vibration tests on OV-101 in its shuttle hangar.[201] Later, in early 1984, during inflight refueling tests, the center attached samples of Felt Reusable Surface Insulation (FRSI) and Advanced Flexible Reusable Surface Insulation (AFRSI) tiles to further evaluate these thermal protection materials.[202] Also during the 1980s, OV-101 was ferried to France for the Paris Air Show (May and June 1983); was displayed at the World's Fair in New Orleans (1984); visited Germany, Italy, England, and Canada; was put on display at the KSC (September 1985); and was used in a series of flight verification vehicle tests at Vandenberg.

In November 1985, OV-101 was officially transferred (on loan) to NASM. After retirement to the Smithsonian, *Enterprise* continued to be used for various tests, and for the loan of its parts. In the aftermath of the *Challenger* accident, OV-101 was used in tests of the shuttle orbiter arresting system, and of crew bail-out concepts, both conducted at Dulles International Airport in Sterling, Virginia. During the 1990s, various parts were removed and subsequently reinstalled, including the main landing gear (borrowed in April 1990; partially reinstalled in June 1997); the door from the starboard wing (removed in July 1993; reinstalled in March 1994); the nose gear (removed in June 1997); the simulated TPS tiles from the right side of the forward fuselage, as well as a splice plate and the thermal control system blankets under it (removed April-May 1999); and eight samples of Kapton wiring (permanently removed in October 1999).[203] In June and July 2002, T-seals were borrowed for use in foam impact tests, and the next year, the left main landing gear door was removed for use in TPS tile tests at KSC. Subsequently, OV-101 was transferred to the Southwest Research Institute for impact testing.[204] Since 2003, following completion of the new exhibit space, *Enterprise* was placed on permanent display at the NASM's Steven F. Udvar-Hazy Center in Chantilly, Virginia.

The Orbiter Fleet

Between 1974 and 1991, all five operational orbiters of the Space Shuttle fleet were assembled in Building 150 at AFP 42, Site 1 North in Palmdale, California. The fifth operational orbiter, *Endeavour*, which replaced *Challenger*, was built with structural spares made by various contractors during construction of *Discovery* (OV-103) and *Atlantis* (OV-104). Upon completion, each orbiter was rolled out of the assembly hangar and, with one exception, was transported overland to Edwards AFB for delivery to KSC. The last orbiter added to the fleet,

---

[201] "Enterprise Tests to Prevent Failures," *X-Press*, October 1, 1982, 2 and 4.
[202] "Inflight Refueling Tests for Shuttle Ferry Flights," *X-Press*, February 3, 1984, 3-4.
[203] Jenkins, *Space Shuttle*, 221.
[204] Jacques Van Oene, "First Space Shuttle Set for 'retirement'," *Spaceflight*, October 2003, 419-421.

Endeavour (OV-105), was ferry-flighted directly from Palmdale to the KSC in May 1991.[205] This operation was made possible by the Orbiter Lifting Frame (OLF) mate-demate device newly erected at Palmdale.

Approximately two million parts, as well as about 237 miles of wire, were used to build each orbiter. The orbiter build flow is summarized in Part II. The orbiter production line at Palmdale saw minimal activity between January 1986 and October 1988, following final assembly of *Atlantis* in April 1985, and was shut down after final assembly of *Endeavour* in 1990. However, beginning in the summer of 1991, Building 150 was reactivated to perform maintenance and modifications of the fleet vehicles. Selected milestone dates for each operational orbiter are provided in the following table.

Space Shuttle Program Orbiter Assembly[206]

Milestone	OV-099	OV-102	OV-103	OV-104	OV-105
Start structural assembly	Jan. 28, 1979	June 28, 1976	Aug. 27, 1979	March 30, 1980	Feb. 15, 1982
Complete final assembly	Oct. 23, 1981	April 23, 1978	Aug. 12, 1983	April 10, 1984	July 6, 1990
Palmdale rollout	June 30, 1982	March 8, 1979	Oct. 16, 1983	March 6, 1985	April 25, 1991
Overland transport: Palmdale to Edwards AFB	July 1, 1982	March 12, 1979	Nov. 5, 1983	April 3, 1985	n/a
Delivery to KSC	July 5, 1982	March 24, 1979	Nov. 9, 1983	April 9, 1985	May 7, 1991

A summary of the manufacturing history, modifications, and mission highlights for *Columbia* (OV-102), *Challenger* (OV-099), *Atlantis* (OV-104), and *Endeavour* (OV-105) follows. *Discovery* (OV-103), the "orbiter of record," is the focus of Part II.

Columbia (OV-102)

Columbia (OV-102) was the first orbiter built for operational use in the SSP. The spacecraft was named after both the first American-helmed sloop, captained by Robert Gray, to circumnavigate the globe, and the Apollo 11 command module. Assembly of *Columbia*'s crew module began on June 28, 1976. Aft fuselage assembly began on September 13, 1976, and the wings arrived on August 26, 1977. Final assembly started on November 7, 1977, and the body flap arrived on February 24, 1978. The payload bay door segments followed two months later. The FRCS pod

[205] OV-106 was the administrative name given to the set of structural components manufactured to replace those used in the construction of *Endeavour* (OV-105). However, the contract for these was cancelled shortly afterwards, and they were never completed.
[206] Jim Dumoulin, "Challenger (STA-099, OV-99), November 10, 1993, http://science.ksc.nasa.gov/shuttle/resources/orbiters/challenger.html; Dumoulin, "Columbia (OV-102)," February 1, 2003, http://science.ksc.nasa.gov/shuttle/resources/orbiters/columbia.html; Dumoulin, "Discovery (OV-103)," August 8, 2005, http://science.ksc.nasa.gov/shuttle/resources/orbiters/discovery.html; Dumoulin, "Atlantis (OV-104)," May 17, 2010, http://science.ksc.nasa.gov/shuttle/resources/orbiters/atlantis.html; Dumoulin, "Endeavour (OV-105)," October 12, 2005, http://science.ksc.nasa.gov/shuttle/resources/orbiters/endeavour.html.

was finished on September 11, and combined systems testing concluded on February 3, 1979. Airlock door installation ended February 16, and vehicle post-checkout completion followed on March 5. Three days later, following final inspection, *Columbia* rolled out from Building 150 (Figure No. A-29).[207] At 158,290 pounds (empty weight) at rollout, it was the heaviest of the orbiters.[208]

On March 10, *Columbia* was mated to the SCA to test the pair's aerodynamics in flight. However, the flight was halted when 4,800 dummy and 100 permanent TPS tiles broke off from *Columbia* before the SCA lifted off the ground. The tiles were properly adhered, and *Columbia*'s ferry flight began on March 20 and ended four days later at KSC. Once in the OPF, *Columbia*'s TPS installation was completed, and all orbiter systems were tested between December 16, 1979, and January 12, 1980. Before the orbiter's first liftoff, engineers at KSC practiced launch procedures. A flight readiness firing on February 20, 1981, resulted in changes to NASA's Space Shuttle countdown policies. Pre-flight preparations were not without misfortune, as two Rockwell technicians died of asphyxiation after a countdown rehearsal on March 19.[209]

Missions and Milestones

OV-102 flew twenty-eight missions between 1981 and early 2003. The launch of *Columbia* on April 12, 1981 (STS-1) marked the first time a Space Shuttle flew into Earth orbit. Noteworthy achievements and "firsts" for *Columbia* included the successful completion of the Orbital Test Flight Program (STS-1 through STS-4); the maiden flight for Spacelab (STS-9); the first ESA astronaut (Dr. Ulf Merbold) (STS-9); recovery of the Long Duration Exposure Facility (LDEF) satellite from orbit (STS-32); the first manned Spacelab mission dedicated to human medical research (STS-40); the first Japanese Space Agency astronaut and first Japanese woman (Chiaki Mukai) to fly in space (STS-65); and deployment of the Chandra X-ray Observatory (STS-93).[210]

Columbia's first flight, STS-1, was commanded by John Young, a four-time space traveler, and piloted by Robert Crippen, a Navy test pilot. The first launch attempt on April 10, 1981, was scrubbed because of a timing issue between the primary flight software and the backup software; a restart of the primary software solved the problem.[211] Two days later, *Columbia* lifted off from LC-39A at 7:00 a.m. The goal of the successful two-day flight was to test the orbiter's components before landing at Edwards AFB.

---

[207] Chris Gebhardt, "Space Shuttle Columbia: A New Beginning and Vision," February 1, 2011, http://www.nasaspaceflight.com/2011/02/space-shuttle-columbia-a-new-beginning-and-vision.
[208] Jenkins, *Space Shuttle*, 242; Boeing, *OV-104, Volume I*, 230 and 231.
[209] Gebhardt, "A New Beginning."
[210] Kathy Hagood, "Columbia was the first Space Shuttle to launch," *Spaceport News*, July 25, 2003, 6-7; NASA KSC, "Space Shuttle Overview: Columbia (OV-102)," December 8, 2008, http://www.nasa.gov/centers/kennedy/shuttleoperations/orbiters/.columbia_info.html.
[211] Terry Keeler, personal communication with Whitney Maples, JSC, June 15, 2012.

Space Shuttle *Columbia*: Launch, Landing, and Mission Summary

SSP Flight No.	Mission No.	Orbiter/ Flight No.	Launch Date	Landing Date	Landing Site	Primary Mission/ Payload Type
1	STS-1	*Columbia* - 1	April 12, 1981	April 14, 1981	EAFB	Test flight
2	STS-2	*Columbia* - 2	November 12, 1981	November 14, 1981	EAFB	Test flight
3	STS-3	*Columbia* - 3	March 22, 1982	March 30, 1982	WSMR	Test flight
4	STS-4	*Columbia* - 4	June 27, 1982	July 4, 1982	EAFB	DoD
5	STS-5	*Columbia* - 5	November 11, 1982	November 16, 1982	EAFB	Satellite
9	STS-9	*Columbia* - 6	November 28, 1983	December 8, 1983	EAFB	Science
24	STS-61C	*Columbia* - 7	January 12, 1986	January 18, 1986	EAFB	Satellite
30	STS-28	*Columbia* - 8	August 8, 1989	August 13, 1989	EAFB	DoD
33	STS-32	*Columbia* - 9	January 9, 1990	January 20, 1990	EAFB	DoD
38	STS-35	*Columbia* - 10	December 2, 1990	December 10, 1990	EAFB	Science
41	STS-40	*Columbia* - 11	June 5, 1991	June 14, 1991	EAFB	Science
48	STS-50	*Columbia* - 12	June 25, 1992	July 9, 1992	KSC	Science
51	STS-52	*Columbia* - 13	October 22, 1992	November 1, 1992	KSC	Science
55	STS-55	*Columbia* - 14	April 26, 1993	May 6, 1993	EAFB	Science
58	STS-58	*Columbia* - 15	October 18, 1993	November 1, 1993	EAFB	Science
61	STS-62	*Columbia* - 16	March 4, 1994	March 18, 1994	KSC	Science
63	STS-65	*Columbia* - 17	July 8, 1994	July 23, 1994	KSC	Science
72	STS-73	*Columbia* - 18	October 20, 1995	November 5, 1995	KSC	Science
75	STS-75	*Columbia* - 19	February 22, 1996	March 9, 1996	KSC	Science
78	STS-78	*Columbia* - 20	June 20, 1996	July 7, 1996	KSC	Science
80	STS-80	*Columbia* - 21	November 19, 1996	December 7, 1996	KSC	Science
83	STS-83	*Columbia* - 22	April 4, 1997	April 8, 1997	KSC	Science
85	STS-94	*Columbia* - 23	July 1, 1997	July 17 , 1997	KSC	Science
88	STS-87	*Columbia* - 24	November 19, 1997	December 5, 1997	KSC	Science
90	STS-90	*Columbia* - 25	April 17, 1998	May 3, 1998	KSC	Science
95	STS-93	*Columbia* - 26	23 July 1999	July 27, 1999	KSC	Interplanetary probe or observatory
108	STS-109	*Columbia* - 27	March 1, 2002	March 12, 2002	KSC	Science
113	STS-107	*Columbia* - 28	January 16, 2003	Destroyed during descent		

The orbiter flew three more test flight missions in 1981 and 1982. *Columbia*'s second mission, STS-2 (November 1981), marked the first time a manned spacecraft returned to orbit. It was also the last time an orbiter flew with an ET painted white. The five-day test-flight was reduced in duration when a fuel cell malfunctioned. However, the crew still accomplished most of their goals. STS-3 (March 1982) was the first time in the SSP's history that a crew conducted on-

board experiments. This mission was also distinguished as the shuttle's first and only landing at White Sands Missile Range in New Mexico. Also, a computer glitch in the autopilot caused the orbiter to speed up before touchdown, which resulted in the longest rollout distance in SSP history at 13,737'. STS-4 in June began with the first on-time launch. *Columbia*'s crew performed scientific experiments on this final test flight, and for the first time, the shuttle carried a classified Air Force payload.[212]

After completion of the four test flights of the SSP, *Columbia* flew three missions until the *Challenger* accident in 1986. Two communication satellites were deployed during STS-5 (November 1982), *Columbia*'s fifth mission. OV-102 next launched one year later, in November 1983, for STS-9. Due to a faulty nozzle on an SRB, OV-102 became the first orbiter in SSP history to roll back from the launch pad. STS-9 was dedicated to an array of scientific experiments. It was the first NASA-ESA joint mission, and the first to include an ESA astronaut on board. Upon completion of STS-9, *Columbia* underwent a one-and-one-half year major modification at Palmdale. OV-102 returned to flight in January 1986 for the STS-61-C mission. A satellite was deployed, the first observations of Haley's Comet were documented, and experiments were carried out.

Columbia's first flight after the *Challenger* accident was STS-28 in August 1989, which carried a DoD payload. In January 1990, *Columbia*'s crew deployed the LEASAT 3 satellite, and completed additional experiments as part of the manifest for STS-32. During this mission, the LDEF satellite was recovered from orbit. After multiple postponements and two rollbacks, *Columbia* flew for the tenth time in December of that year for STS-35. During the mission, OV-102's crew conducted astronomical studies using the ASTRO-1 observatory. Three female astronauts, Mission Specialists Tamara E. Jernigan, M. Rhea Seddon, and Millie Hughes-Fulford, flew together for the first time on STS-40 (June 1991). During STS-40, eighteen life science experiments were completed over nine days as part of the Spacelab program. Microgravity research was the primary focus of STS-50 in June 1992. At thirteen days, it was the longest duration SSP mission to date. Microgravity research was also carried out during STS-52 (November 1992), and a satellite also was deployed. A number of scientific experiments were completed as part of STS-55 (April 1993). In October 1993, STS-58, *Columbia*'s fifteenth mission, was a life science research mission devoted to the study of weightlessness on the human body. The next two missions, STS-62 (March 1994) and STS-65 (July 1994), focused on microgravity research.[213]

Following a major modification period which ended in April 1995, *Columbia* returned to service in October 1995 for STS-73, dedicated to Earth science research. *Columbia*'s crew for STS-75 (February 1996) also focused on investigating the Earth's physical processes. Despite the loss of a deployed satellite system, important microgravity experiments were completed during the

---

[212] Judith A. Rumerman, with Chris Gamble and Gabriel Okolski, *U.S. Human Spaceflight, A Record of Achievement, 1961-2006* (Washington, DC: NASA History Office, 2007), 39-40.
[213] Gebhardt, "A New Beginning."

mission. For *Columbia*'s twentieth flight in June 1996, the crew for STS-78 studied the effects of long-duration spaceflight on the human body, an important step in preparation for construction of the ISS. During STS-80 (November to December 1996), two satellites were deployed and retrieved, and further microgravity research was conducted. Issues with *Columbia*'s airlock forced the cancellation of two planned spacewalks. At seventeen-and-one-half days, this was the longest mission in SSP history.[214]

Despite a problematic fuel cell, *Columbia* successfully reached orbit for STS-83 in April 1997. However, the faulty fuel cell resulted in the premature termination of the mission after just three days. In an unprecedented action, NASA remanifested the orbiter, crew, and objective for the failed STS-83 mission as STS-94. Launched in July 1997, STS-94, *Columbia's* twenty-third mission, focused on microgravity research, which also was the objective of the next OV-102 mission, STS-87 (November 1997). The STS-87 mission also deployed the SPARTAN-201 satellite (which failed to operate), and ISS construction methods were tested during the two extra vehicular activities (EVAs). *Columbia*'s twenty-fifth mission, STS-90, launched in April 1998, was a Neurolab mission dedicated to the effects of microgravity on the brain and nervous system. STS-90 marked the last and most complex of the twenty-five Spacelab missions. *Columbia* did not fly again until STS-93 in July 1999; this SSP mission was distinguished as the first to be commanded by a female astronaut, Eileen Collins. OV-102 experienced low-level engine cutoff during ascent. The Chandra X-ray Observatory was deployed during STS-93, and physical and biomedical experiments were completed.[215]

After a hiatus of two-and-one-half years, which included a seventeen month orbiter major modification (OMM), *Columbia* launched in March 2002 on its twenty-seventh mission. STS-109 included five EVAs to service the HST. *Columbia*'s crew installed a new advanced camera for surveys, new rigid solar arrays, a new power control unit, a new reaction wheel assembly, and a new cryocooler for the Near Infrared Camera and multi-object spectrometer.

STS-107, *Columbia's* final mission, was launched on January 16, 2003. Over the next fifteen days, the crew completed an assortment of life science and Earth science studies. At 8:15 a.m. on February 1, *Columbia* began to deorbit and reenter the atmosphere. The Mission Control Center lost contact with the orbiter forty-five minutes later.[216] *Columbia* was destroyed over eastern Texas during its descent, approximately sixteen minutes before landing.

Columbia continued to influence space flight after the accident; recommendations by the CAIB resulted in major modifications to *Discovery*, *Atlantis*, and *Endeavour*. In her twenty-two years of service, *Columbia* flew twenty-eight missions; traveled 121,696,993 miles; completed 4,808 orbits; spent 300 days in space; and carried 160 crewmembers. *Columbia* flew the first four test

---

[214] Rumerman, *U.S. Human Spaceflight*, 61.
[215] Rumerman, *U.S. Human Spaceflight*, 61-65.
[216] Chris Gebhardt, "Columbia (OV-102): A Pioneer to the End," February 2, 2011, http://www.nasaspaceflight.com/2011/02/columbia-ov-102-a-pioneer-to-the-end.

missions of the SSP, deployed eight satellites, completed a service mission to the HST, and was distinguished by seventeen missions dedicated to the advancement of microgravity study.[217]

Modifications

OV-102 underwent four periods of major modification between January 1984 and February 2001, totaling almost thirty-nine months. *Columbia* also was taken out of service at other times for the installation of new equipment, or for other changes.

Timetable of *Columbia's* (OV-102) Major Modification Periods

OMM Designation	Begin OMM	End OMM	Duration	Next Flight
AA	January 25, 1984	September 11, 1985	18 months	Flight 7; STS-61C
J1	August 15, 1991	February 7, 1992	5.7 months	Flight 12; STS-50
J2	October 13, 1994	April 10, 1995	6 months	Flight 18; STS-73
J3	September 26, 1999	February 23, 2001	17 months	Flight 27; STS-109

In July 1982, *Columbia* was upgraded for the first time after completion of STS-4, the fourth and final test flight. A payload sensor processor and payload data interleaver were installed in order to carry the PAM-D (Payload Assist Module-Delta) payload during STS-5. Additionally, *Columbia*'s ejection seats were deactivated, a specialist seat was installed on the flight deck, another seat was added to the port side of the middeck, the middeck was strengthened, and parts of the developmental flight instrumentation (DFI) pallet were removed.

Columbia underwent additional changes both before and after STS-9. The first phase began when the orbiter finished STS-5 in November 1982. Most of the 152 modifications were completed so *Columbia* could carry the pressurized Spacelab scientific module. The mid-fuselage was strengthened; crew sleep stations were installed; the landing gear and brakes were modified; the remainder of the DFI pallet was removed; structural and electrical components were implemented to accommodate the Spacelab; the TPS was improved; and more mission specialist and payload seats were added.

Columbia returned from STS-9 in December 1983, and on January 25, 1984, began her first major modification, designated "AA OMM;" this modification period lasted eighteen months, ending on September 11, 1985. AA OMM was a "demodification of the orbiter from a test/development to an operational configuration."[218] The 231 modifications included the removal of the ejection seats; installation of head-up displays; upgrade to a 5.4 loads database; the installation of the new 17" disconnect valves; addition of infrastructure for the global positioning system (GPS); more brake improvements; more TPS enhancements; addition of infrastructure for manned maneuvering units; and installation of the Orbiter Experiments

[217] Gebhardt, "A Pioneer to the End."
[218] CAIB, *Report, Volume II* (Washington, DC: US Government Printing Office, 2003), 415, http://history.nasa.gov/columbia/CAIB_reportindex.html.

Program, which studied the aerodynamic and thermodynamic qualities of the orbiter. The Shuttle Entry Air Data System, or SEADS, was installed in the nose cap, the Shuttle Infrared Leeside Temperature Sensing, or SILTS, was installed in a pod on the vertical stabilizer, and the Shuttle Upper Atmospheric Mass Spectrometer, or SUMS, was installed between the nose cap and nose wheel doors.[219]

In the aftermath of the *Challenger* accident, *Columbia* received a new crew escape system, thermal protection on the chin panel, new brakes, and redesigned 17" propellant disconnects between the orbiter and the ET.[220]

Following the completion of STS-40 in June 1991, *Columbia's* eleventh mission, the orbiter was transported to Palmdale in August 1991, for its second OMM, designated J1. Before the ferry flight, part of the SILTS was removed at KSC; the remainder was removed at Palmdale. Over a period of almost six months, between August 1991 and February 1992, seventy-eight modifications were made, including several significant system changes. Upgrades made *Columbia* the first extended duration orbiter (EDO), with the capacity to fly shuttle missions of up to sixteen days plus two days of contingency. The major changes included providing the capacity to carry extra hydrogen and oxygen tanks in the cargo bay for use in generating electricity and water; installing improved equipment for handling waste onboard and for scrubbing the air of exhaled carbon dioxide; and providing extra oxygen and nitrogen for breathing air. *Columbia* had five "cryo sets" of hydrogen and oxygen tanks. A "16-day cryo-pallet" designed by Rockwell and mounted at the rear of the payload bay had the capability of carrying an additional four sets.[221]

Other advancements included new carbon brakes, the installation of new flight control computers, thermal tile upgrades to reduce preparations required between flights, improvements to the nosewheel steering and brake controls, installation of a drag chute to slow and stabilize the spacecraft on landing, and installation of improved APUs used to power the hydraulics onboard.[222] Also, the orbiter was modified to meet the 6.0 loads database requirement.

In October 1994, *Columbia* began its third major modification period, J2. For six months, concluding in April 1995, eighty modifications and 143 deferred maintenance items were completed. These included upgrades to the main landing gear door thermal barrier, the tire pressure monitoring system, and radiator drive circuitry.[223] The corrosion prone wing-leading edge spar also received attention. In all, 488 visual and X-ray structural inspections were carried out.

---

[219] Jenkins, *Space Shuttle*, 435-437.
[220] Jenkins, *Space Shuttle*, 282.
[221] Kyle Herring, "Extending Duration," *Space News Roundup*, June 1, 1990, 3.
[222] James Hartsfield, "Columbia passes 32-million-mile checkup," *Space News Roundup*, February 7, 1992, 1; Boeing, *Atlantis OV-104, Volume I*, 230.
[223] Boeing, *Atlantis OV-104, Volume I*, 230.

Columbia's final major modification period (J3) at Palmdale began in September 1999 and concluded in February 2001.[224] During this seventeen-month period, OV-102 received 133 modifications, most notably the upgrade to the Multifunction Electronic Display Subsystem (MEDS) glass cockpit.[225] More than 200 miles of wiring were inspected.[226] Unlike the other orbiters, *Columbia* retained its internal airlock, so it could continue to accommodate payloads requiring a 60' cargo bay capacity.[227]

Challenger (OV-099)

Challenger (OV-099) was the second orbiter built for operational use in the SSP. It was named after both *HMS Challenger*, a nineteenth century British Naval research vessel, and the Apollo 17 lunar module. Conversion from the test article STA-099 to the flight orbiter OV-099 was initiated in Palmdale in November 1979, and completed in October 1981.[228] During this time, the major components were returned to their manufacturers for modification, and the airframe was disassembled and rebuilt. *Challenger* rolled out on June 30, 1982, and was delivered to KSC in early July 1982. At 155,400 pounds, *Challenger* was 2,889 pounds lighter than predecessor *Columbia*, despite the presence of more equipment and a stronger structure.[229] In addition, the ejection-seat area, integral to *Columbia*, was retrofitted as cabin space.[230]

During its brief service, OV-099 was associated with a number of "firsts," including the first spacewalk of the SSP (STS-6); the deployment of the first satellite in the TDRS System (STS-6); the launch of the first female American astronaut, Sally Ride (STS-7); the first to launch and land at night and the first to carry an African-American astronaut, Guion S. Bluford (STS-8); the first shuttle landing at KSC (STS-41B); the first to host a crew that included two US female astronauts (STS-41G); and the first German-dedicated Spacelab mission (STS-61A). In addition, in January 1983, *Challenger* became the only orbiter to undergo two flight readiness firings before a debut launch. The second was necessitated after a leak was detected during the first firing.[231]

---

[224] Jenkins, *Space Shuttle*, 437-438.
[225] *Columbia* was the second orbiter to get the MEDS upgrade.
[226] NASA, "Columbia to Begin Third Decade in Space with Feb. 28 Liftoff," *Kennedy News*, February 14, 2002, http://www.nasa.gov/centers/kennedy/news/releases/2002/release-20020214.html.
[227] NASA KSC, "Columbia Scheduled to Depart KSC for Major Modifications in Palmdale, CA," KSC Release No. 74-99 (Florida: Kennedy Space Center, September 23, 1999), http://www-pao.ksc.nasa.gov/kscpao/release/1999/74-99.htm.
[228] Boeing, *OV-104, Volume I*, 234.
[229] Jenkins, *Space Shuttle*, 240-242.
[230] "New Orbiter Challenger at NASA Dryden," *X-Press*, July 2, 1982, 2.
[231] NASA KSC, "Space Shuttle Overview: Challenger (OV-099)," August 6, 2008, http://www.nasa.gov/centers/kennedy/shuttleoperations/orbiters/challenger-info.html.

Space Shuttle *Challenger*: Launch, Landing, and Mission Summary

SSP Flight No.	Mission No.	Orbiter/ Flight No.	Launch Date	Landing Date	Landing Site	Primary Mission/ Payload Type
6	STS-6	*Challenger* - 1	April 4, 1983	April 9, 1983	EAFB	Satellite
7	STS-7	*Challenger* - 2	June 18, 1983	June 24, 1983	EAFB	Satellite
8	STS-8	*Challenger* - 3	August 30, 1983	September 5, 1983	EAFB	Satellite
10	STS-41B	*Challenger* - 4	February 3, 1984	February 11, 1984	KSC	Satellite
11	STS-41C	*Challenger* - 5	April 6, 1984	April 13, 1984	EAFB	Satellite
13	STS-41G	*Challenger* - 6	October 5, 1984	October 13, 1984	KSC	Interplanetary probe or observatory
17	STS-51B	*Challenger* - 7	April 29, 1985	May 6, 1985	EAFB	Science
19	STS-51F	*Challenger* - 8	July 29, 1985	August 6, 1985	EAFB	Science
22	STS-61A	*Challenger* - 9	October 30, 1985	November 6, 1985	EAFB	Science
25	STS-51L	*Challenger* - 10	January 28, 1986	Lost seventy-three seconds after launch		

The April 4, 1983, inaugural launch of *Challenger* was the sixth mission (STS-6) of the SSP (Figure No. A-30). During this mission, the first TDRS was deployed. Also, *Challenger* became the first orbiter to launch in the afternoon, take off from KSC's MLP-2, and use the new lightweight tank (LWT). STS-6 marked the first EVA in SSP history when two astronauts tested new spacesuits.[232]

During STS-7 (June 1983), two satellites were deployed, and scientific experiments on metal alloys were conducted. *Challenger* returned to space two months later for STS-8, the first night launch in SSP history. An Indian satellite was deployed, and the crew tested the orbiter's ability to withstand the cold of space. *Challenger*'s nighttime landing at Edwards AFB on September 5, 1983, was the first in SSP history. *Challenger*'s fourth flight, STS-41B, began on February 3, 1984. Two satellites were deployed and two crewmembers performed the first untethered EVA. Two months later, on STS-41C, *Challenger* deployed the LDEF. Despite some difficulty, the crew also retrieved, repaired, and redeployed the Solar Max satellite.[233]

STS-41G (October 1984) carried the first seven-member crew; it also was the first flight to include two female astronauts, Mission Specialists Sally Ride and Kathryn Sullivan. Sullivan was also the first American woman to walk in space. The Earth Radiation Budget Satellite was deployed during this mission. *Challenger* launched for the seventh time in April 1985 (STS-51B). The mission was dedicated to scientific experiments. Two monkeys and twenty-four

[232] Chris Gebhardt, "1983-1986: The Missions and History of Space Shuttle Challenger," January 28, 2011, http://www.nasaspaceflight.com/2011/01/1983-1986-missions-history-space-shuttle-challenger.htm.
[233] Rumerman, *U.S. Human Spaceflight*, 40-42.

rodents were aboard for the life sciences experiments, marking the first time astronauts flew with live mammals.[234] STS-61A (October 1985) also was dedicated to scientific experiments.[235]

Challenger's final mission, STS-51L, was originally scheduled to launch on January 22, 1986. However, a number of factors, including bad weather, slipped the launch date to January 28. Temperatures the night before were below freezing, and launch was delayed two hours to inspect for ice. When *Challenger* lifted off at 11:38 a.m., the ground temperature was 36 degrees Fahrenheit (F), the lowest for a launch in SSP history by fifteen degrees. Seventy-three seconds after liftoff, the vehicle was destroyed, claiming the lives of its seven-member crew. The cause of the accident was determined to be an O-ring failure in the right SRB; the cold weather was determined to be a contributing factor.

In three years of service, *Challenger* flew ten missions, traveled 23,661,290 miles, completed 995 orbits, spent sixty-two days in space, and carried sixty crewmembers.[236]

Atlantis (OV-104)

Atlantis (OV-104), the fourth orbiter built for operational use in the SSP, was named after the marine research vessel for the Woods Hole Oceanographic Institute in Massachusetts. It was the first US vessel to be used for oceanographic research, from 1930 to 1966. Assembly of the *Atlantis* crew module began on March 3, 1980. Aft fuselage assembly started on November 23, 1981, and the wings arrived on June 13, 1983. Final assembly started on December 2, 1983, and was completed on April 10, 1984. Upon rollout on March 6, 1985, *Atlantis* weighed 154,670 pounds, almost 7,000 pounds lighter than *Columbia*.[237] The decreased weight was largely attributable to the greater use of thermal protection blankets on the upper body instead of tiles.[238] *Atlantis* left Palmdale on April 3, 1985, and arrived at KSC on April 9, 1985.

Missions

Atlantis flew thirty-three missions in twenty-six years of service, from 1985 to 2011. The landing of OV-104 on July 21, 2011, brought the operational phase of the SSP to a close. *Atlantis* is associated with a number of "firsts," including the first landing at KSC since STS-51D in 1985 (STS-38, 1990); the first RTF spacewalk (STS-37, 1991); the first docking operation with *Mir*, as well as the first mission to land with a different crew than the one at launch (STS-71, 1995); the first joint US/Russian EVA (STS-86, 1997); and the first flight with the new MEDS glass cockpit (STS-101, 2000). Other accomplishments of *Atlantis* included deployment of the

[234] Jenkins, *Space Shuttle*, 274.
[235] Gebhardt, "Space Shuttle Challenger."
[236] NASA, *Space Shuttle Era Facts*.
[237] Boeing, *OV-104, Volume I*, 240.
[238] Boeing, *OV-104, Volume I*, 240.

Magellan and Galileo planetary probes, as well as the Compton Gamma Ray Observatory.[239] STS-135 was the first mission since RTF-2 in 2005 during which there was no contingency shuttle on the pad. *Atlantis* support missions to the ISS delivered the US laboratory *Destiny* module, the Joint Airlock *Quest*, and several sections of the integrated truss structure.

Space Shuttle *Atlantis*: Launch, Landing, and Mission Summary

SSP Flight No.	Mission No.	Orbiter/ Flight No.	Launch Date	Landing Date	Landing Site	Primary Mission / Payload Type
21	STS-51J	*Atlantis* – 1	October 3, 1985	October 7, 1985	EAFB	DoD
23	STS-61B	*Atlantis* – 2	November 26, 1985	December 3, 1985	EAFB	Satellite
27	STS-27	*Atlantis* – 3	December 2, 1988	December 6, 1988	EAFB	DoD
29	STS-30	*Atlantis* – 4	May 4, 1989	May 8, 1989	EAFB	Interplanetary probe or observatory
31	STS-34	*Atlantis* – 5	October 18, 1989	October 23, 1989	EAFB	Interplanetary probe or observatory
34	STS-36	*Atlantis* – 6	February 28, 1990	March 4, 1990	EAFB	DoD
37	STS-38	*Atlantis* – 7	November 15, 1990	November 20, 1990	KSC	DoD
39	STS-37	*Atlantis* – 8	April 5, 1991	April 11, 1991	EAFB	Interplanetary probe or observatory
42	STS-43	*Atlantis* – 9	August 2, 1991	August 11, 1991	KSC	Satellite
44	STS-44	*Atlantis* – 10	November 24, 1991	December 1, 1991	EAFB	DoD
46	STS-45	*Atlantis* – 11	March 24, 1992	April 2, 1992	KSC	Science
49	STS-46	*Atlantis* – 12	July 31, 1992	August 8, 1992	KSC	Satellite
66	STS-66	*Atlantis* – 13	November 3, 1994	November 14, 1994	EAFB	Science
69	STS-71	*Atlantis* – 14	June 27, 1995	July 7, 1995	KSC	*Mir* support
73	STS-74	*Atlantis* – 15	November 12, 1995	November 20, 1995	KSC	*Mir* support
76	STS-76	*Atlantis* – 16	March 22, 1996	March 31, 1996	EAFB	*Mir* support
79	STS-79	*Atlantis* – 17	September 16, 1996	September 26, 1996	KSC	*Mir* support
81	STS-81	*Atlantis* – 18	January 12, 1997	January 22, 1997	KSC	*Mir* support
84	STS-84	*Atlantis* – 19	May 15 , 1997	May 24, 1997	KSC	*Mir* support
87	STS-86	*Atlantis* – 20	September 25, 1997	October 6, 1997	KSC	*Mir* support
98	STS-101	*Atlantis* – 21	May 19, 2000	May 29, 2000	KSC	ISS support
99	STS-106	*Atlantis* – 22	September 8, 2000	September 20, 2000	KSC	ISS support
102	STS-98	*Atlantis* – 23	February 7, 2001	February 20, 2001	EAFB	ISS support
105	STS-104	*Atlantis* – 24	July 12, 2001	July 24, 2001	KSC	ISS support
109	STS-110	*Atlantis* – 25	April 8, 2002	April 19, 2002	KSC	ISS support
111	STS-112	*Atlantis* – 26	October 7, 2002	October 18, 2002	KSC	ISS support

[239] NASA KSC, "Space Shuttle Overview: Atlantis (OV-104)," January 20, 2012, http://www.nasa.gov/centers/kennedy/shuttleoperations/orbiters/atlantis-info.html.

SSP Flight No.	Mission No.	Orbiter/ Flight No.	Launch Date	Landing Date	Landing Site	Primary Mission / Payload Type
116	STS-115	*Atlantis* – 27	September 9, 2006	September 21, 2006	KSC	ISS support
118	STS-117	*Atlantis* – 28	June 8, 2007	June 22, 2007	EAFB	ISS support
121	STS-122	*Atlantis* – 29	February 7, 2007	February 20, 2008	KSC	ISS support
126	STS-125	*Atlantis* – 30	May 11, 2009	May 24 , 2009	EAFB	Interplanetary probe or observatory
129	STS-129	*Atlantis* – 31	November 16, 2009	November 27, 2009	KSC	ISS support
132	STS-132	*Atlantis* – 32	May 14, 2010	May 26, 2010	KSC	ISS support
135	STS-135	*Atlantis* – 33	July 8, 2011	July 21, 2011	KSC	ISS support

Atlantis' first flight, STS-51J (October 1985), carried a classified DoD payload. STS-61B, OV-104's second flight, was launched on November 26, 1985 (Figure No. A-31). At fifty-four days after the previous mission, this marked the fastest turnaround time in SSP history. Three commercial satellites were deployed. *Atlantis* did not fly again for almost three years, in the aftermath of the *Challenger* accident. During liftoff of the STS-27 mission in December 1988, *Atlantis* sustained heavy damage when a piece of the SRB insulating material damaged a wing. When the shuttle returned, after deploying a DoD payload, it was discovered that 700 tiles were damaged and one was missing.

In 1989, *Atlantis* deployed both Magellan to map Venus and Galileo to study Jupiter. OV-104 flew two more classified DoD missions, STS-36 and STS-38, in 1990. During STS-37 in 1991, *Atlantis* deployed the Compton Gamma Ray Observatory, the second piece of the Great Observatories program. Also that year, OV-104 released a commercial satellite in August (STS-43), and a DoD satellite in November (STS-44) during its tenth flight.[240]

During STS-45 (May 1992), *Atlantis* carried the first Atmospheric Laboratory for Applications and Science, created by an international partnership. STS-46, flown that summer, also was an international scientific endeavor. During STS-66, launched in November 1994, the *Atlantis* crew conducted studies of the Sun and its effects on Earth.

From 1995 to 1997, *Atlantis* flew seven of the SSP's nine missions to *Mir*. In June 1995, *Atlantis* became the first orbiter to dock with *Mir* and exchange crew members during STS-71, the 100th US space flight in history. A docking module and two solar arrays were brought to the space station as part of the STS-74 mission (November 1995), *Atlantis*' fifteenth flight. STS-76 (March 1996) marked the first time astronauts completed an EVA at two docked spacecraft. During STS-79 (September 1996), the fourth *Mir* docking mission, *Atlantis* returned astronaut Shannon Lucid back to Earth after her record-setting 188 days in orbit aboard *Mir*. Three more missions to *Mir*

[240] Rumerman, *U.S. Human Spaceflight*, 49-50.

followed for *Atlantis* in 1997, STS-81, -84, and -86. OV-104's twentieth flight, STS-86 in late 1997, included the first joint astronaut-cosmonaut spacewalk.[241]

From 2000 to 2007, *Atlantis* flew nine missions to the ISS. These usually involved the transport of supplies to the space station, a crew exchange, and construction and maintenance work. After undergoing it's second orbiter maintenance down period (OMDP)-2 in the late 1990s, *Atlantis* became the first orbiter to fly with the new MEDS glass cockpit during STS-101. The Quest airlock was transported to the ISS and installed as part of STS-104 in July 2001. In April 2002, *Atlantis* carried the S0 section of the integrated truss structure to the station during STS-110, the orbiter's twenty-fifth flight. Another section of the integrated truss structure followed later that year. After the *Columbia* accident, *Atlantis* also was the first orbiter designated as the emergency rescue vehicle during *Discovery*'s RTF. In September 2006, OV-104 carried the P3/P4 truss and solar arrays in STS-115, the first mission dedicated to construction of the ISS since the *Columbia* accident. The S3/S4 truss segment and more arrays were delivered in June 2007. *Atlantis* conveyed the *Columbus* laboratory to the ISS in February 2008.

The spacecraft's thirtieth mission, STS-125 (May 2009) was dedicated to servicing the HST for the final time. It was also planned as *Atlantis*' final flight before an OMDP.[242] However, *Atlantis* went through two minor modification periods and ended up flying three more missions, all to the ISS. The goal of STS-129 in November 2009, was to deliver spare parts to the station before the end of the SSP; *Atlantis* transported the Russian Rassvet research module during STS-132 in May 2010.[243]

STS-135 (July 2011) was not only *Atlantis*' last mission, but the final flight of the SSP.[244] Commanded by Chris Ferguson and piloted by Doug Hurley, OV-104 launched July 8, 2011, with the *Raffaello* MPLM in the payload bay. Almost six tons of supplies and equipment were delivered, maintenance work was completed, experiments were performed, and a non-functioning cooling system pump module was removed from the ISS.[245] The final wheel stop of the SSP was at 5:57 a.m. on July 21, 2011. The final return of *Atlantis* was the twentieth landing in the dark. In twenty-six years of service, *Atlantis* flew thirty-three missions, traveled 125,935,769 miles, completed 4,848 orbits, spent 307 days in space, and carried 207 crewmembers.[246]

---

[241] Rumerman, *U.S. Human Spaceflight*, 58-63.
[242] Gebhardt, "After a Storied 25 Years."
[243] Chris Gebhardt, "Reaching the End: Atlantis and the Fight Against Retirement," July 4, 2011, http://www.nasaspaceflight.com/2011/07/reaching-end-atlantis-fight-against-retirement.
[244] NASA, "STS-135: The Final Voyage," July 28, 2011, http://www.nasa.gov/mission_pages/shuttle/shuttlemissions/sts135/main/index.html .
[245] Jay Levine, "Final Flight," *Dryden X-Press*, September 2011, 22-24.
[246] NASA, "STS-135 Mission of Space Shuttle Atlantis by the Numbers," July 21, 2011, http://www.nasa.gov/topics/shuttle_station/features/135numbers.html.

Modifications

Atlantis completed two missions before the *Challenger* accident. Subsequently, she underwent a number of modifications prior to her first flight following the accident, including the installation of a crew escape system, the addition of thermal protection on the chin panel, new brakes, and the redesigned 17" propellant disconnects between the orbiter and the ET.[247]

The first major modifications at Palmdale (OMDP-1; J1) started on October 19, 1992, and were completed on May 27, 1994. During this nineteen month period, OV-104 received 331 modifications and 184 maintenance procedures. Modifications included the installation of a drag chute and improved APUs; an upgrade to the nose wheel steering system; the addition of EDO hardware; and preparations for the installation of the orbiter docking system (ODS) for missions to *Mir*.[248] OV-104 returned to KSC on May 29, 1994.

Atlantis departed KSC on November 11, 1997, to begin OMDP-2 (J2) at Palmdale.[249] Ninety-six modifications and eighty-seven maintenance procedures were completed.[250] The most notable was the first installation of the MEDS. Other modifications included the installation of the ODS for missions to the ISS and removal of the internal airlock. Among the weight-reduction measures implemented, the AFRSI was replaced with FRSI. *Atlantis* returned to KSC on September 27, 1998.[251]

In the aftermath of the *Columbia* accident, and in accordance with the recommendations by the CAIB, *Atlantis*, *Discovery* and *Endeavour* underwent a number of major modifications, as previously described, including the addition of the orbiter boom sensor system (OBSS). In all, *Atlantis* received approximately seventy-five modifications.[252]

Endeavour (OV-105)

Endeavour (OV-105) was the fifth and last orbiter built for operational use in the SSP. The name *Endeavour* was selected from entries proposed by US schoolchildren; it was the only shuttle name suggested by the public. The name honors two crafts: the Royal Navy vessel HMS *Endeavour*, commanded by Captain James Cook, which explored the South Pacific from 1768 to 1771, and the Apollo 15 command module that traveled to the Moon in 1971.[253]

---

[247] Jenkins, *Space Shuttle*, 282.
[248] James Hartsfield, "Atlantis to get California refit after next flight," *Space News Roundup*, July 10, 1992, 1, 4.
[249] Jenkins, *Space Shuttle*, 438.
[250] ACI and Weitze Research, *Roll-Up Report*, 3-11.
[251] Jenkins, *Space Shuttle*, 438.
[252] Mike Leinbach, *NASA Direct*, August 22, 2006, http://www.nasa.gov/multimedia/podcasting/115_askmission_leinbach_transcript.html.
[253] Chris Gebhardt, "Space Shuttle Endeavour: A New Beginning (Part I)," April 21, 2011, http://www.nasaspaceflight.com/2011/04/space-shuttle-endeavour-a-new-beginning-part-i/.

According to JSC's Orbiter Projects Office Manager, Richard A. Colonna, OV-105 was "built essentially to the OV-104 *Atlantis* drawings."[254] It incorporated the many modifications, upgrades and technologies that had been added to the fleet, such as the improved version of the APUs that provided power to the shuttle's hydraulic system; upgraded inertial measurement units and tactical air navigation (TACAN) systems; upgraded avionics systems that included advanced general purpose computers (GPCs); as well as the new carbon brakes.[255]

In 1983, NASA ordered spare parts including aft fuselage, midfuselage, forward fuselage, vertical stabilizer, rudder, wings, elevons, and an body flap. Rockwell International received $1.3 billion to build a new orbiter from these already assembled major structural components on July 31, 1987, and was given authority by NASA to begin construction in August 1987.[256] Final assembly began on February 2, 1988, and work was completed on July 6, 1990.[257] Upon rollout on April 25, 1991, *Endeavour* weighed 155,050 pounds, the lightest of the orbiters by 110 pounds because of more efficient manufacturing (Figure No. A-32).[258] It is the only orbiter to have been ferried directly from Palmdale to the KSC, where it was delivered on May 7, 1991. *Endeavour* started its maiden flight, STS-49, with liftoff on May 7, 1992.

Missions

Endeavour is associated with a number of "firsts," including the first three-astronaut EVA, and the first mission to feature four EVAs (STS-49, 1992); the first operational use of a drag chute (STS-47, 1992); the first flight of the SPACEHAB[259] module (STS-57, 1993); the first HST servicing mission (STS-61, 1993); the first flight with toughened uni-piece fibrous insulation (TUFI) tiles (STS-59, 1994); and the first deployment and retrieval of two satellites on the same mission (STS-69, 1995).[260] In addition, *Endeavour* marked two milestones on STS-47 in 1992, as the first orbiter to fly a Japanese astronaut, Payload Specialist, Mamoru Mohri, as well as the first female African American astronaut, Mission Specialist, Mae C. Jemison. *Endeavour* delivered the *Unity* Node, the first US component of the ISS, on STS-88 (December 1998).

---

[254] "OV 105 to incorporate latest advances," *Space News Roundup*, August 22, 1986, 1.
[255] Boeing, *Orbiter Vehicle Data Pack Document: Orbiter Vehicle Endeavour (OV-105), Volume I* (Huntington Beach, California: The Boeing Company, 2011), 245.
[256] Jenkins, *Space Shuttle*, 242-243; Kyle Herring, "Endeavour assembly advances," *Space News Roundup*, June 16, 1989, 3.
[257] Boeing, *OV-105, Volume II*, 13.
[258] Boeing, *OV-105, Volume I*, 244.
[259] The commercially-developed SPACEHAB is a pressurized laboratory designed to more than double the pressurized work space for crew-tended experiments. A total of twenty-two experiments were flown, covering materials and life sciences. The first SPACEHAB module flew in 1993 aboard STS-57. Steve Siceloff, "SPACEHAB Ready for Last Mission," July 16, 2007, http://www.nasa.gov/mission_pages/shutt;e/behindscenes/lastspacehab.html; "Space Shuttle Mission Archives, STS-57," March 31, 2010, http://www.nasa.gov/mission_pages/shuttle/shuttlemissions/archives/sts-57.html.
[260] NASA KSC, "Space Shuttle Overview: Endeavour (OV-105)," December 8, 2008, http://www.nasa.gov/centers/kennedy/shuttleoperations/orbiters/endeavour-info.html.

Space Shuttle *Endeavour*: Launch, Landing and Mission Summary

SSP Flight No.	Mission No.	Orbiter/ Flight No.	Launch Date	Landing Date	Landing Site	Primary Mission/ Payload Type
47	STS-49	*Endeavour* - 1	May 7, 1992	May 16, 1992	EAFB	Satellite
50	STS-47	*Endeavour* - 2	September 12, 1992	September 20, 1992	KSC	Science
53	STS-54	*Endeavour* - 3	January 13, 1993	January 19, 1993	KSC	Satellite
56	STS-57	*Endeavour* - 4	June 21, 1993	July 1, 1993	KSC	Science
59	STS-61	*Endeavour* - 5	December 2, 1993	December 13, 1993	KSC	Interplanetary probe or observatory
62	STS-59	*Endeavour* - 6	April 9, 1994	April 20, 1994	EAFB	Science
65	STS-68	*Endeavour* - 7	September 30, 1994	October 11, 1994	EAFB	Science
68	STS-67	*Endeavour* - 8	March 2, 1995	March 18, 1995	EAFB	Science
71	STS-69	*Endeavour* - 9	September 7, 1995	September 18, 1995	KSC	Science
74	STS-72	*Endeavour* - 10	January 10, 1996	January 20, 1996	KSC	Satellite
77	STS-77	*Endeavour* - 11	May 19, 1996	May 29, 1996	KSC	Satellite
89	STS-89	*Endeavour* - 12	January 22, 1998	January 31, 1998	KSC	*Mir* support
93	STS-88	*Endeavour* - 13	December 4, 1998	December 15, 1998	KSC	ISS support
97	STS-99	*Endeavour* - 14	February 11, 2000	February 22, 2000	KSC	Science
101	STS-97	*Endeavour* - 15	November 30, 2000	December 11, 2000	KSC	ISS support
104	STS-100	*Endeavour* - 16	April 19, 2001	May 1, 2001	EAFB	ISS support
107	STS-108	*Endeavour* - 17	December 5, 2001	December 17, 2001	KSC	ISS support
110	STS-111	*Endeavour* - 18	June 5, 2002	June 19, 2002	EAFB	ISS support
112	STS-113	*Endeavour* - 19	November 23, 2002	December 7, 2002	KSC	ISS support
119	STS-118	*Endeavour* - 20	August 8, 2007	August 21, 2007	KSC	ISS support
122	STS-123	*Endeavour* - 21	March 11, 2008	March 26, 2008	KSC	ISS support
124	STS-126	*Endeavour* - 22	November 14, 2008	November 20, 2008	EAFB	ISS support
127	STS-127	*Endeavour* - 23	July 15, 2009	July 31, 2009	KSC	ISS support
130	STS-130	*Endeavour* - 24	February 8, 2010	February 21, 2010	KSC	ISS support
134	STS-134	*Endeavour* - 25	May 16, 2011	June 1, 2011	KSC	ISS support

Endeavour launched for the first time on May 7, 1992 (STS-49), exactly one year after arriving at KSC. It was the only orbiter in the fleet to launch its inaugural flight from LC 39B; the other four shuttles made their first liftoffs from LC 39A. The purpose of STS-49 was to retrieve, repair, and relaunch the Intelsat VI satellite. Retrieval proved to be difficult, and required both three attempts and three astronauts, the only tri-astronaut spacewalk in SSP history. The four EVAs totaled twenty-five hours and twenty-seven minutes, the longest duration spacewalks for a mission. OV-105's landing on May 16 marked the first time a shuttle landed with the new drag

chute (Figure No. A-33). At eight days, twenty-one hours, seventeen minutes, and thirty-eight seconds, it was the longest inaugural flight.[261]

Forty-four materials and life science experiments were conducted during STS-47 in September 1992. *Endeavour* deployed a satellite during STS-54 in January 1993, and experiments were conducted on X-ray radiation and microgravity. Also that year, more experiments were completed as part of STS-57, and the malfunctioning EURECA (European Retrievable Carrier) dark matter experiment was retrieved from orbit.[262]

In December 1993, *Endeavour* flew the critical first service mission to the HST. STS-61 included a record five EVAs as the crew installed a modification to overcome a manufacturing flaw that caused the HST to produce blurry images. In 1994, the study of Earth was the focus of *Endeavour*'s sixth and seventh missions. In March 1995, STS-67 was OV-105's longest mission, at sixteen days. Later in 1995 during STS-69, astronauts aboard *Endeavour* conducted studies on the Sun, among other experiments. The orbiter flew for the tenth time in January 1996 for STS-72. During STS-72 (January 1996), a Japanese satellite was retrieved, experiments were performed, and practice ISS construction spacewalks were accomplished. *Endeavour* carried the SPACEHAB module and its associated experiments into space in May of that year (STS-77). In January 1998, *Endeavour* flew her only mission to *Mir*. OV-105 returned after 7,000 pounds of supplies and experiments were unloaded, an EVA was completed, and two crew members exchanged spacecraft.[263]

In December 1998, *Endeavour* flew the first construction mission to the ISS. For STS-88, the crew connected the US-built *Unity* module to the Russian *Zarya* module. In February 2000, *Endeavour* collected 1 trillion measurements of Earth during STS-97, a mission that resulted in more detailed topographic maps of the planet.

After the mapping mission, the remaining missions flown by OV-105 were exclusively to support the ISS. These missions usually involved the conveyance of supplies to the station, maintenance work, and a crew exchange before returning to Earth. In late 2000, *Endeavour* flew her fifteenth mission, STS-97, which delivered the P6 integrated truss; it contained the ISS's first set of power-generating solar arrays. In April 2001, *Endeavour* transported tons of equipment to the ISS, including a robot arm used for assembly. In December of that year, the orbiter flew STS-108, the first SSP mission after the September 11, 2001, attacks. Amid the heightened security, the launch time was not released until twenty-four hours before the scheduled liftoff. In addition to supplies, *Endeavour* carried items commemorating the attacks, including an American flag found at Ground Zero in New York City. In addition, three crew members were exchanged. STS-111 (June 2002) was another ISS supply, maintenance, and crew exchange mission. *Endeavour*

---

[261] NASA, "STS-49," March 31, 2010, http://www.nasa.gov/mission_pages/shuttle/shuttlemissions/srchives/sts-49.html.
[262] Rumerman, *U.S. Human Spaceflight*, 52-53.
[263] Chris Gebhardt, "Space Shuttle Endeavour: A New Beginning (Part 1)."

hauled the 27,506-pound P1 truss to the ISS during STS-113 in November 2002. The flight marked the last time a Russian cosmonaut flew aboard a shuttle, and the landing was delayed a record three times because of weather. STS-113 was *Endeavour*'s last flight for nearly five years.

After the *Columbia* accident, *Endeavour* underwent modifications before returning to flight for STS-118 in August 2007, the orbiter's twentieth mission. Originally scheduled to be flown by *Columbia*, the mission carried supplies and the S5 truss to the ISS. The crew included NASA's first Educator Astronaut, mission Specialist, Barbara R. Morgan.[264] For the first time, a shuttle's TPS was closely examined in space after cameras on the OBSS noticed a potential problem; it turned out to be minor tile damage. The mission also marked the first use of the three-string GPS. In a March 2008 night launch, *Endeavour* carried *Kibo*, a Japanese experiments module, to the ISS during STS-123. The orbiter spent a record eleven days, twenty hours, and thirty-six minutes docked to the station. *Endeavour* left the OBSS at the station so it could be used by *Discovery* during the next mission—the only example of this occurrence. Equipment was conveyed to the ISS during STS-126 (November 2008) in preparation for the expansion of the crew from three people to six. Upon reentry into the atmosphere, *Endeavour* landed at the temporary, shorter runway at Edwards AFB, the only orbiter to touch down there. The crew of STS-127, tasked with completing installation of the *Kibo* component, conducted a record-tying five spacewalks. Thirteen people were aboard the ISS during this mission, which was the most people together in space at once. *Endeavour* transported the Node-3, used to connect other modules, and a cupola with seven windows as part of STS-130 in February 2010.[265]

OV-105 launched for the last time on May 16, 2011. STS-134 received more attention than usual because the launch was attended by US Representative Gabrielle Giffords, the wife of mission Commander Mark Kelly and survivor of an assassination attempt earlier that year.[266] The payload contained the Alpha Magnetic Spectrometer-02, a physics experiment module used to study the universe. The $2 billion spectrometer was connected to the ISS. At the completion of her sixteen-day journey, *Endeavour* landed for the last time on June 1, 2011, at KSC. OV-105 was the second orbiter to be retired.[267] In nineteen years of service, *Endeavour* flew twenty-five missions, traveled 122,883,151 miles, completed 4,671 orbits, spent 299 days in space, and carried 173 crewmembers.[268]

---

[264] On July 19, 1985, Morgan was selected as the backup candidate for the NASA Teacher in Space Program, and trained with Christa McAuliffe and the *Challenger* crew. NASA JSC, "Biographical Data, Barbara Radding Morgan," July 2010, http://www.jsc.nasa.gov/Bios/htmlbios/morgan.html.
[265] Chris Gebhardt, "OV-105 Endeavour: A Long-Standing Dream Realized," April 2011, http://www.nasaspaceflight.com/2011/04/ov-105-endeavour-a-long-standing-dream-realized.
[266] "Wounded Rep. Giffords Undergoes Brain Surgery With Husband in Space," May 18, 2011, http://www.space.com/11705-gabrielle-giffords-brain-surgery.html.
[267] NASA, "STS-134 Mission Information," June 9, 2011, http://www.nasa.gov/mission_pages/shuttle/shuttlemissions/sts134/main/index.html.
[268] NASA KSC, *Space Shuttle Era Facts*.

Modifications

In 1996-1997, *Endeavour* underwent her first OMDP after completion of STS-72 in May 1996; OMDP-1 was partially conducted at Palmdale and partially at KSC. Sixty-three modifications were made at Palmdale, thirty-three at KSC, and ten were shared between the two facilities. The orbiter left KSC for Palmdale on July 30, 1996, and returned on March 27, 1997. The most notable improvement was the installation of an external airlock and ODS. In addition, the AFRSI blankets on the midfuselage, aft fuselage, payload bay doors, and upper wings were replaced by the thinner and lighter FRSI blankets. Also, doublers were added to several wing spars to eliminate load restrictions.

Beginning in December 2003, *Endeavour* underwent an almost two-year OMDP-2 at KSC. One hundred and twenty-four modifications were made, including safety measures and the new MEDS "glass cockpit."[269] In addition, the first station-to-shuttle power transfer system (SSPTS) was installed, as was the 3-string GPS. About 2,000 tiles were replaced, and seventy-two tiles were added to the wing leading edges and main and landing gear doors. Furthermore, approximately 2,000 TPS blankets were replaced or repaired.[270]

IC. Orbiter Thermal Protection System Development and Testing

Introduction

A variety of TPS materials were used to protect the orbiter vehicle, mostly from the extreme heat of reentry. Among the materials applied externally to the structural skin of the orbiter were reinforced carbon-carbon (RCC), high temperature reusable surface insulation (HRSI), fibrous refractory composite insulation (FRCI), low-temperature reusable surface insulation (LRSI), advanced flexible reusable surface insulation (AFRSI), and felt reusable surface insulation (FRSI), as well as strain isolator pads (SIPs) and gap fillers. In general, the type and placement of TPS materials on the orbiter was related to temperature. A description of the TPS materials which characterized the "end-state" orbiters *Discovery*, *Atlantis*, and *Endeavour* is provided in Part IIB.

---

[269] Boeing, *OV-105, Volume II*, 65; "NASA's Space Shuttle Endeavour Comes to Life," NASA News Release, October 6, 2005, http://www.nasa.gov/home/hqnews/2005/oct/HQ_05336_Endeavour_comes_to_life.html.
[270] Laura Herridge, "STS-118 crew members proud of modified Endeavour," *Spaceport News*, August 10, 2007, 1 and 4.

Early Research and Development

> "*We knew it would be hot in the nose and the wings and not as hot on the top side. That's what we started out with*."[271]

As captured in the statement of Wendell D. Emde, former supervisor of North American Rockwell's TPS group, there was no precedent for the thermal protection system required by the STS. NASA first experimented with ablative heat shields for the Mercury, Gemini, and Apollo programs, but by 1970, for the future space shuttle, the agency sought a type of heat shield that was reusable. In early 1971, NASA MSC awarded contracts to three companies for the development of new orbiter "surface materials." The recipients of the contracts, valued at about $320,000 each, were McDonnell Douglas Corporation; General Electric Company, Aerospace Group; and the Lockheed Missiles and Space Company. The contracts covered the design, development and testing of a ceramic insulator class of materials, including the delivery of sample tiles sized to 12" x 12" x 2".[272]

One of the alternate reusable heat shields under consideration was known as reusable surface insulation (RSI). RSI, in turn, led directly to the development of thermal ceramic tiles. Lockheed's research center in Palo Alto, California, had undertaken research and development for this type of thermal protection shield, beginning in the early 1960s. By 1970-1971, Lockheed had a functioning pilot plant to manufacture silica RSI tiles. Experimentation for improved tile materials continued, and in late 1972, NASA ran a series of tests at several of its centers. At the MSC (now JSC) in Houston, Lockheed RSI tiles were the only ones that survived the final series of thermal-acoustic tests.[273] The final tiles had two different coatings, as well as size and thickness dimensions, dependent on which area of the shuttle they were to cover. NASA testing and evaluation of the tiles continued through the 1970s, most notably at Ames.

Manufacture

Following their award as the orbiter and shuttle integration prime contractor, North American Rockwell selected the Lockheed Missile and Space Company as the subcontractor for the manufacture of most of the shuttle's TPS. Production of the insulating tiles which covered the orbiter's surface was initiated at Lockheed's new facility in Sunnyvale, California, on September 15, 1976.[274] The first shipment of HRSI was delivered to Rockwell in early 1977. Subsequently, in the mid-1980s, Rockwell took over the manufacture of TPS materials at Palmdale, where

---

[271] Wendell D. Emde, interview by Jennifer Ross-Nazzal, *NASA STS Recordation Oral History Project*, August 27, 2010, http://www.jsc.nasa.gov/history/oral_histories/STS-R/EmdeWD/EmdeWD_8-27-10.htm
[272] "MSC Awards Three Contracts For Shuttle Surface Materials," *Roundup*, July 16, 1971, 1.
[273] Joan Lisa Bromberg, *NASA and the Space Industry* (Baltimore: Johns Hopkins University Press, 1999), 100.
[274] "Orbiter insulation production begins," *Roundup*, September 24, 1976, 2.

NASA constructed Building 154 for work on protective tile adhesives, gap fillers, thermal barriers, and foam, during 1983-1984.[275] Rockwell fabricated FRSI in various thicknesses.

Supplementing the tile assembly and manufacturing capabilities at Lockheed's Sunnyvale plant and at Rockwell's Palmdale plant was the Thermal Protection System Facility (TPSF) at KSC, completed in 1988. The first tiles made at KSC were produced in the OPF-2. Later, the manufacture and repair of the Space Shuttle's tiles, gap fillers, and insulation blankets, as well as coatings and adhesives, were moved to the TSPF. Each unique tile underwent a process which took it from raw materials through finished product; the gap fillers and blankets were assembled from pre-made fabrics. Following their manufacture, TPS products were delivered to the OPF for installation on the orbiter. The first tiles produced at KSC flew on *Columbia* in January 1990.[276]

NASA encountered major challenges in the tile adhesive process. The tiles were fragile and required an intermediate, flexible layer next to the skin of the shuttle. A SIP, made of Nomex nylon felt, served this purpose. Rockwell individually bonded the tiles to SIPs. Workmen glued them to the shuttle in arrays, with small gaps set between the tiles. At their Palmdale plant, Rockwell workers painted the exterior of the shuttle with a green epoxy corrosion inhibiter at the start of the tile application process. Rockwell also used a blueprint-like guide printed on Mylar to assist in tile layout. Typically, the tiles also required extensive post-mission reworking after each shuttle flight.

TPS Testing

Qualifying a new TPS material required extensive testing. Critical to the testing process were NASA's arc jet facilities at both Ames and JSC; the arc jets simulated flight entry conditions. Ames also played a leading role in the development and testing of plugs, patches, pastes, and other materials used to repair damage to the shuttle's TPS while in orbit.

Between December 1979 and November 1980, approximately sixty flights were flown during a 12-month flight test program at NASA's DFRC. Both the F-15 and F-104 aircraft were used to test some of the TPS tiles from the orbiter to demonstrate tile performance up to 104 percent of the dynamic pressure planned for shuttle operations.[277] Six different tile articles were constructed identical to the areas of the orbiter surface being represented. The tested locations were the closeout tile aft of the wing leading edge area; the forward wing glove area; the vertical tail leading edge; the window post area; and the elevon leading edge and elevon hinge areas. As a

---

[275] Boeing, *Space Exploration – Palmdale, CA: AF Plant 42, Site 1 North* (Palmdale, California: The Boeing Company, 2006).
[276] Patricia Slovinac, "Cape Canaveral Air Force Station, Launch Complex 39, Thermal Protection System Facility (John F. Kennedy Space Center)," HAER No. FL-8-11-L. Historic American Engineering Record (HAER), National Park Service, US Department of the Interior, April 2011, 13.
[277] "Dryden to Participate in More Shuttle Tests," *X-Press*, October 5, 1979, 2-3; "Tile Tests Continued," *X-Press*, August 22, 1980, 2.

result, several design changes were made to the TPS in several areas.[278] "These changes consisted of revision of attachment techniques to improve binding forces, modified gap filler assemblies to prevent detachment, and improved installation and testing techniques to ensure satisfactory compliance with design requirements."[279] These changes were later incorporated into the orbiter.

Beginning in late 1982, DFRC conducted tests of AFRSI, as part of Ames' investigation of new thermal protection materials. Following initial wind tunnel tests conducted at Ames, the baseline test program at DFRC used the F-140 aircraft to subject the AFRSI to air loads that were equal and up to 1.4 times those experienced in actual flights. Variations in the materials tested in the baseline series included insulation fabricated using heavy and light surface fabric, felt layers of differing thicknesses, and varying joint configurations. Later tests at DFRC, in early 1983, investigated the drag characteristics of the insulation materials, as well as more severe thermal and aerodynamic environments to help determine the long-term durability.[280]

TPS Evolutionary Changes

Throughout the SSP, the TPS that safeguarded the shuttle's frame from the intense heat of space was regularly modified. Changes were both in response to technological advances as well as to correct problems detected after flight. Early in the SSP, for example, plasma flow was discovered where the wings and elevons met. Hence, the LRSI tiles on *Discovery* and *Atlantis* were replaced by FRCI and HRSI tiles and gap fillers.[281] In other areas not exposed to high temperatures, the LRSI tiles were replaced by AFRSI blankets, developed after *Columbia* was delivered to KSC in 1979. The blankets were stronger, lighter, quicker to install, and cheaper than the LRSI tile alternative. After its seventh flight, *Columbia* was modified to replace most of the LRSI tiles with AFRSI, and AFRSI blankets gradually replaced most of the LRSI tiles on *Discovery* and *Atlantis*. The LRSI tiles on *Columbia*'s mid-fuselage, payload bay doors, and vertical stabilizer were also replaced, and *Endeavour* was built with many AFRSI blankets already in place.[282] Damaged HRSI tiles were replaced by the more durable FRCI tiles, which were developed after the construction of the Space Shuttle. Furthermore, in 1988, the HRSI tiles near the nose cap were regularly damaged upon reentry, so they were replaced with a RCC chin. TUFI tiles successfully debuted in 1994 on *Endeavour*'s base heat shield between the three SSMEs. From then on, TUFI tiles were used to replace damaged HRSI tiles on the base heat shield and lower body flap surface, because the TUFI tiles were more likely to dent than break when struck.

---

[278] "Shuttle Tile Tests Being Completed," *X-Press*, November 21, 1980, 2; "Shuttle Tile Test Completed," *X-Press*, January 16, 1981, 2.
[279] "Shuttle Tile Test Completed."
[280] "Dryden Starts Shuttle Insulation Tests," *X-Press*, January 7, 1983, 2; "Space Shuttle Insulation Tested Here for Air Load Data," *X-Press*, March 18, 1983, 2 and 4.
[281] Jenkins, *Space Shuttle*, 400.
[282] Jenkins, *Space Shuttle*, 401.

As a result of the trend to replace some tiles with Flexible Insulation Blankets (FIBs), while the earlier orbiters used as many as 34,000 tiles, the last addition to the orbiter fleet, *Endeavour*, was protected by approximately 26,000 tiles. Beginning in 1996, AFRSI blankets were replaced by the lighter FRSI tiles to reduce weight in preparation for flights to the ISS. During major modification periods, the FRSI tiles were added to the shuttle midfuselage and aft fuselage, payload bay doors, and upper wing surfaces.[283]

The wing leading edge RCC upper panels were designed to withstand up to 1”-long penetrations and still block plasma flow. However, some of the lower panels could not suffer any damage without letting heat from the plasma flow reach the leading attach fittings and front spar in the wings. Starting in 1998, during major modifications, insulation was added to the lower panels.[284]

The *Columbia* accident demonstrated that the shuttle’s TPS design was vulnerable to impact damage from the existing debris environment. As a result, NASA initiated a program to harden the orbiter against impacts.[285] In 2003, spar sneak flow protection was added to the wing leading edges to prevent hot gas flow from potentially reaching the RCC tiles. In addition, the horse collar gap fillers were redesigned to prevent hot gas from passing into the wing leading edges in case a tile broke off.[286] Beginning with STS-121 in July 2006, NASA replaced the existing FRCI belly tiles with the more impact-resistant Boeing Rigid Insulation (BRI) tiles around the main landing gear door, nose landing gear door, ET umbilical doors, wing leading edge carrier panels, and windows. These changes were made during orbiter processing between flights.[287]

ID. Shuttle Carrier Aircraft

Two NASA-owned SCAs, N905NA and N911NA, supported the SSP. These aircraft were modified four-engine intercontinental range Boeing 747 jetliners, originally manufactured for commercial use (Figure Nos. A-34, A-35).

Historical Overview

In 1973, early in the SSP, NASA considered both the C-5A cargo aircraft, manufactured by Lockheed,[288] and the Boeing 747 “jumbo jet” as potential vehicles to ferry the orbiter cross country. In August and October 1973, contracts were awarded to Boeing and Lockheed, respectively, to conduct preliminary feasibility studies to evaluate whether the orbiter could

[283] Jenkins, *Space Shuttle*, 398-401.
[284] Jenkins, *Space Shuttle*, 398-401.
[285] NASA, *NASA’s Implementation Plan for Space Shuttle Return to Flight and Beyond*, vol. 1 (Washington, DC: NASA Headquarters, 2007), 1-21.
[286] Boeing, *Atlantis OV-104, Volume II*, 74.
[287] NASA, *NASA’s Implementation Plan*, 1-25.
[288] The original version of the C-5A was manufactured by Lockheed between 1968 and 1973. This large military transport aircraft, which featured a heavy airlift capacity, was used primarily by the US Air Force.

separate from the back of the carrier aircraft. NASA's DFRC awarded a $56,000 contract to Boeing to study the feasibility of using a large aircraft to ferry the orbiter. The contract was the result of an unsolicited proposal submitted by Boeing. The objective of the 60-day study was to define operational requirements, performance, cost, schedules and preliminary systems design for such a carrier aircraft.[289] The Lockheed contract covered wind tunnel tests simulating the use of a C-5A as a ferry aircraft. The tests of a scale model of the orbiter mounted atop a scale model of the C-5A were conducted in Lockheed's Low Speed Tunnel in Burbank, California. The objectives were to determine if the plan was technically feasible, and if so, to determine the optimum location for positioning the orbiter on the C-5A.[290]

Test results demonstrated that the 747 had several advantages over the C-5A. The 747 was shown to be safer, and to be capable of a nonstop transcontinental flight without the need for refueling. Additionally, it could use shorter runways, and had a longer structural life. As a result, by June 1974, NASA replaced its earlier plans to install six air-breathing engines on the orbiter for ferry flights in favor of using a Boeing 747 to transport the orbiter. Following the request of authorization made by Christopher Kraft, director of NASA's JSC, in June 1974, NASA's Space Shuttle Program Office approved the purchase of a Boeing 747 airplane for use as the SCA.[291]

On July 18, 1974, NASA purchased a used Boeing 747-123 jetliner from American Airlines for approximately $15.6 million. At the time of purchase, the aircraft had logged about 9,000 flight hours. It was given the registration number N905NA.[292] Before being modified, the aircraft was initially used as part of a DFRC study of trailing wake vortices; this research was not directly connected to the SSP.[293] Subsequently, the Boeing 747 was used in a shuttle program-related simulated separation maneuver test. On August 2, 1976, modifications were started by Boeing at their production facilities near Everett, Washington. Work under this $30 million contract was completed in December. Under a separate contract, four Pratt and Whitney JT9D-3A engines were altered for use on the SCA.[294] In January 1977, the modified aircraft was flown to Edwards AFB for use with the *Enterprise* during the ALT Program. The tests were a success and demonstrated the flightworthiness of the aircraft-orbiter combination.[295]

N905NA was the only SCA until November 1990. In the wake of the 1986 *Challenger* accident, the Rogers Commission recommended that increasing the ferry capacity would enhance

---

[289] "Boeing Gets Contract For Shuttle Ferry," *X-Press*, August 3, 1973, 2.
[290] "Shuttle Ferry Wind Tunnel Tests Slated," *X-Press*, October 26, 1973, 4.
[291] "747 To Be Used For Orbiter Transport," *X-Press*, June 21, 1974, 2.
[292] Heppenheimer, *Development of the Space Shuttle*, 94.
[293] Jenkins, *Space Shuttle*, 196.
[294] Jenkins, *Space Shuttle*, 197. The Pratt & Whitney JT9D engine was a large commercial turbo fan engine initially used on Boeing's 747-100.
[295] T.A. Heppenheimer, *Development of the Space Shuttle*, 121.

reliability of ferry operations and would eliminate a "single point failure from the program."[296] In accordance, in February 1988, NASA announced plans to acquire a second 747 to serve as backup to N905NA.[297] A surplus Japan Air Lines domestic passenger aircraft (747-100SR) with about 32,000 hours of flight time was acquired for NASA by Boeing in April 1988. Boeing began modifications to the aircraft in 1988, at the Boeing Military Airplanes manufacturing facility in Wichita, Kansas, under a $55 million contract, which included the cost of purchase.[298] After the structural work was completed, the aircraft was delivered to Chrysler Technologies in Waco, Texas, for painting.[299] SCA N911NA was added to the NASA fleet on November 20, 1990.[300] It was first used in May 1991, to deliver the new orbiter *Endeavour* (OV-105) to KSC.

Structural modifications to N905NA and N911NA to support ferry operations included stripping each airplane down to the "skin;" adding bracing for structural support; adding two vertical stabilizers, one on each end of the standard horizontal stabilizer; and adding three mounting struts, one forward and two aft, for attachment of the orbiter. Also, extra layers of aluminum skin were added to various stress points throughout the airplane.[301] Inside, aft of the forward doors, all of the standard internal furnishings, seats, overhead bins, etc. were removed (Figure A-35). A few seats were retained for transport of support personnel. Redundant power supplies and cabling were added, primarily to power orbiter fluid system heaters and water coolant loop pumps during ferry operations.[302] New controls and displays for the cockpit were added to monitor these devices. Modifications increased the basic weight of the aircraft by about 2,800 pounds.[303] Some modifications were reversible, including the support struts, the horizontal tip fans, and associated cabling and umbilicals.[304] Improvements also were made to the Pratt and Whitney JT-9D engines to provide more power. In late 1995, the NASA worm logo on the vertical stabilizer of N911NA was repainted with a new stylized tail logo. A few months later, the old logo was replaced on N905NA.

The two SCAs are nearly identical. Each aircraft measures approximately 231'-10" in length, with a wing span of 195'-8". The height to the top of the cockpit area is 32'-1", and 63'-5" to the

---

[296] Barbara Schwartz, "NASA Announces Delivery of Second Shuttle Carrier Aircraft," NASA News Release, November 16, 1990, http://www.nasa.gov/centers/johnson/pdf/83142main_1990.pdf; Jeff Carr, "Ferry fleet doubles in size," *Space News Roundup*, November 16, 1990, 1 and 4.
[297] Jenkins, *Space Shuttle*, 198.
[298] Jeffrey E. Carr, "NASA Buys Second Shuttle Carrier Aircraft," NASA News Release, August 10, 1988, http://www.nasa.gov/centers/johnson/pdf/83140main_1988.pdf.
[299] Schwartz, "Second Shuttle Carrier Aircraft."
[300] Jenkins, *Space Shuttle*, 198.
[301] Taylor, interview, 29.
[302] Donald L. McCormack, interview by Jennifer Ross-Nazzal, *NASA STS Recordation Oral History Project*, March 24, 2011, http://www.jsc.nasa.gov/history/oral_histories/STS-R/McCormackDL/McCormackDL_3-24-11.htm. The SCA provided power to the orbiter during the ferry mission. If the orbiter lost power, some of the circulation systems and coolant loops became affected, Taylor, interview, 9.
[303] Marty Curry, ed., "Shuttle Carrier Aircraft," NASA Fact Sheets, July 21, 2006, http://www.nasa.gov/centers/dryden/news/FactSheets/FS-013-DFRC.html.
[304] NASA, *NSTS Shuttle Reference Manual*, "Shuttle Carrier Aircraft," August 31, 2000.

top of the vertical stabilizer. Each has a maximum gross taxi weight of 713,000 pounds. SCA N905NA has a basic weight of 318,053 pounds; N911NA weighs 323,034 pounds.[305] N911NA has five upper-deck windows on each side and N905NA has only two. To balance the SCA when it was carrying the orbiter, nearly 2 tons of pig iron and 3.5 tons of pea gravel were used as ballast. The pig iron is secured up front in the former first class section; the pea gravel is contained in cargo containers in the lower forward cargo bay.[306]

Ferry Flights

The two SCAs transported all five orbiters from California to KSC following their assembly at Palmdale. Cross-country ferry flights also were made following post-mission landings at Edwards AFB, as well as for orbiter maintenance and modifications in Palmdale (prior to September 2002).

Between March 1979, when SCA N905NA delivered *Columbia* to KSC, and September 2009, when SCA N911NA returned *Discovery* after mission STS-128, the two SCAs completed a total of seventy-six ferry flights comprised of 238 legs.[307] Almost three-quarters of the ferry flights were made by SCA N905NA, which actively served the SSP between 1979 and 2007.[308] SCA N911NA completed twenty ferry flights during its eighteen years of service (1991 through 2009), which began with the initial delivery of *Endeavour* to KSC in May 1991.

Tabulation of Ferry Flights and Flight Legs, by SCA and Flight Purpose

SCA	Initial Delivery No. Flights/No. Legs	Post-Mission No. Flights/No. Legs	OMM/OMDP No. Flights/No. Legs	Totals No. Flights/No. Legs
N905NA	4/11	42/126	10/29	56/166
N911NA	1/6	13/47	6/19	20/72
Totals	5/17	55/173	16/48	76/238
Average No. Legs	3.4	3.2	3.0	3.1

With the exception of *Endeavour*, the newly assembled orbiters were towed from Palmdale to Edwards AFB and mated to SCA N905NA using the MDD at DFRC. *Endeavour* was the only new orbiter delivered by SCA N911NA, and the only one to be mated to the SCA at Palmdale using the OLF.

[305] Curry, "Shuttle Carrier Aircraft."
[306] Gray Creech, "Gravel Haulers: NASA's 747 Shuttle Carriers," August 22, 2003, http://www.nasa.gov/news/special/747_Shuttle_Carriers_prt.htm.; Pete Seidl, interview by Joan Deming and Patricia Slovinac, September 18, 2006.
[307] A leg was the distance traveled between stops for fueling or other purposes.
[308] In 1977, SCA N905NA was used in NASA's ALT Program. It also carried the orbiter prototype *Enterprise* to KSC for various fit checks and facility tests. The last post-mission (STS-128) landing of a SCA at Edwards AFB was on September 11, 2009. The final seven missions of the SSP ended with landings at KSC.

Early in the SSP, Edwards AFB was the preferred post-mission landing site because of more stable weather conditions as well as a choice of concrete and dry lake beds. However, KSC later became the primary landing site because it saved processing time to prepare for the next mission. The first landing at KSC was at the end of mission STS-41B, on February 11, 1984. Overall, approximately 74 percent of the first fifty missions, between 1981 and 1992, ended with a landing in California, resulting in thirty-seven ferry flights to return the orbiter to KSC. Of these, all but four of the thirty-seven used SCA N905NA. The first mission-related use of SCA N911NA was in support of STS-40 in June 1991. For the next fifty shuttle flights, between 1992 and 2000, only ten (25 percent) of the landings were made at Edwards AFB. The SCAs were placed into service equally, with five ferry flights each. In total, throughout the SSP, fifty-five post-mission ferry flights were made between California and Florida. SCA N905NA carried the orbiters forty-two times and SCA N911NA was used for thirteen flights. *Discovery* was the fleet leader, with a total of fifteen ferry flights, followed by *Columbia* and *Atlantis*, with thirteen each; *Challenger* and *Endeavour* rode atop the SCA seven times each.

Tabulation of Post-Mission Ferry Flights, by Orbiter and SCA

SCA	OV-099 *Challenger*	OV-102 *Columbia*	OV-103 *Discovery*	OV-104 *Atlantis*	OV-105 *Endeavour*	Totals
N905NA	7	12	12	9	2	42
N911NA	0	1	3	4	5	13
Totals	7	13	15	13	7	55

Post-mission ferry flights averaged three legs per flight. All but four ferry flights were made in two to four legs. *Columbia*, *Discovery*, and *Atlantis* each had a single five-leg ferry flight following missions STS-35, STS-42, and STS-76, respectively. The initial delivery of *Endeavour* entailed a six-leg journey.

In addition to initial delivery and mission-related flights, between 1985 and 2001, the SCAs were used to transport the orbiters between KSC and Palmdale, sixteen times in support of eight vehicle maintenance and major modifications.[309] Ten flights were made by SCA N905NA and six by SCA N911NA. On *Columbia's* first trip back to Palmdale, it was demated and mated at the DFRC MDD and towed to and from Palmdale. After the *Challenger* accident, the OLF was assembled at Palmdale and used to mate and demate the orbiter from the SCA. For cost-saving reasons, beginning in September 2002, NASA relocated the orbiter overhaul and upgrade operations from Palmdale to KSC. Thus, since late 2002, the SCAs have provided ferry flight service only in situations where bad weather requires a landing in California. A list of SSP ferry flights follows.

Notably, in 2001, a unique event in the history of the SSP took place in the form of simultaneous dual ferry missions. As related by Donald McCormack, *Columbia* was at Palmdale for maintenance, and scheduled to be ferried back to KSC in late February using SCA N905NA. On

[309] *Columbia* made four trips to Palmdale, *Atlantis* two, and *Discovery* and *Endeavour*, one trip each.

February 20, 2001, *Atlantis* concluded the STS-98 mission with a landing at Edwards AFB; turnaround processing began immediately. Since *Atlantis* would be flown again sooner than *Columbia*, NASA decided that the *Columbia* ferry mission could not interfere with the *Atlantis* ferry. Also, neither could interfere with the launch of the STS-102 (*Discovery*) mission, scheduled for March 8. Subsequently, two independent ferry missions were accomplished, with *Atlantis* using SCA N911NA. *Columbia* was prepared first, but the ferry mission was delayed by rain. By this time, *Atlantis* was also ready. Therefore, on March 1, 2001, *Columbia* was flown to Dyess AFB in Abilene, Texas, and *Atlantis* was flown to Altus AFB near Altus, Oklahoma, on the first leg of their respective ferry flight. Both *Atlantis* and *Columbia* arrived at KSC on March 4. *Atlantis* went to the KSC SLF and *Columbia* went to the skid strip at Cape Canaveral Air Force Station (CCAFS). Following the demating of *Atlantis*, *Columbia* was moved to the SLF on March 5.[310]

Space Shuttle Ferry Flights (exclusive of OV-101)

Seq. No.	Flight	Orbiter	SCA	Flight Legs	Flight Route/Date	Initial Delivery	Post-Mission	OMM/ OMDP
1	Delivery to KSC	OV-102	905	4	EDW-BIF/Mar. 20, 1979 BIF-SKF/ Mar. 22, 1979 SKF-VPS/ Mar. 23, 1979 VPS-X68/ Mar. 24, 1979	X		
2	STS-1	OV-102	905	2	EDW-TIK/ Apr. 27, 1981 TIK-X68/ Apr. 28, 1981		X	
3	STS-2	OV-102	905	2	EDW-BSM/Nov. 24, 1981 BSM-X68/Nov. 25, 1981		X	
4	STS-3	OV-102	905	2	SNG-BAD/Apr. 6, 1982 BAD-X68/Apr. 6, 1982		X	
5	Delivery to KSC	OV-099	905	2	EDW-EFD/July 4, 1982 EFD-X68/July 5, 1982	X		
6	STS-4	OV-102	905	2	EDW-DYS/July 14, 1982 DYS-X68/July 15, 1982		X	
7	STS-5	OV-102	905	2	EDW-SKF/Nov. 21, 1982 SKF-X68/ Nov. 22, 1982		X	
8	STS-6	OV-099	905	2	EDW-SKF/Apr. 14, 1983 SKF-X68/Apr. 14, 1983		X	
9	STS-7	OV-099	905	2	EDW-SKF/June 28, 1983 SKF-X68/June 29, 1983		X	
10	STS-8	OV-099	905	2	EDW-SPS/Sept. 9, 1983 SPS-X68/Sept. 9, 1983		X	
11	Delivery to KSC	OV-103	905	3	EDW-VBG/Nov. 6, 1983 VBG-FWH/Nov. 8, 1983 FWH-X68/9 Nov. 9, 1983	X		

[310] McCormack, interview, 19-20.

Seq. No.	Flight	Orbiter	SCA	Flight Legs	Flight Route/Date	Initial Delivery	Post-Mission	OMM/ OMDP
12	STS-9	OV-102	905	4	EDW-BIF/Dec. 14, 1983 BIF-SKF/Dec. 14, 1983 SKF-VPS/Dec. 15, 1983 VPS-X68/Dec. 15, 1983		X	
13	Mods	OV-102	905	2	X68-SKF/Jan. 26, 1984 SKF-EDW/Jan. 27, 1984			X
14	STS-41C	OV-099	905	2	EDW-SKF/Apr. 17, 1984 SKF-X68/Apr. 18, 1984		X	
15	STS-41D	OV-103	905	2	EDW-LTS/Sept. 9, 1984 LTS-X68/Sept. 10, 1984		X	
16	Delivery to KSC	OV-104	905	2	EDW-EFD/Apr. 12, 1985 EFD-X68/Apr. 13, 1985	X		
17	STS-51B	OV-099	905	2	EDW-SKF/May 10, 1985 SKF-X68/May 11, 1985		X	
18	STS-51G	OV-103	905	2	EDW-BSM/June 28, 1985 BSM-X68/June 28, 1985		X	
19	Mods	OV-102	905	2	EDW-OFF/July 14, 1985 OFF-X68/July 14, 1985			X
20	STS-51F	OV-099	905	4	EDW-DMA/Aug. 10, 1985 DMA-SKF/Aug. 10, 1985 SKF-VPS/Aug. 11, 1985 VPS-X68/Aug. 11, 1985		X	
21	STS-51I	OV-103	905	2	EDW-SKF Sept. 7, 1985 SKF-X68/Sept. 8, 1985		X	
22	STS-51J	OV-104	905	2	EDW-SKF/Oct. 11, 1985 SKF-X68/Oct. 11, 1985		X	
23	STS-61A	OV-099	905	4	EDW-DMA/Nov. 10, 1985 DMA-SKF/Nov. 10, 1985 SKF-VPS/Nov. 11, 1985 VPS-X68/Nov. 11, 1985		X	
24	STS-61B	OV-104	905	2	EDW-SKF/Dec. 7, 1985 SKF-X68/Dec. 7, 1985		X	
25	STS-61C	OV-102	905	4	EDW-DMA/Jan. 22, 1986 DMA-SKF/Jan. 22, 1986 SKF-VPS/Jan. 23, 1986 VPS-X68/Jan . 23, 1986		X	
26	STS-26	OV-103	905	2	EDW-SKF/Oct. 8, 1988 SKF-X68/Oct. 8, 1988		X	
27	STS-27	OV-104	905	3	EDW-DMA/Dec. 11, 1988 DMA-SKF/Dec. 12, 1988 SKF- -X68/Dec. 13, 1988		X	
28	STS-29	OV-103	905	2	EDW-SKF/Mar. 23, 1989 SKF-X68/Mar. 24, 1989		X	

Seq. No.	Flight	Orbiter	SCA	Flight Legs	Flight Route/Date	Initial Delivery	Post-Mission	OMM/ OMDP
29	STS-30	OV-104	905	4	EDW-BIF/May 13, 1989 BIF-DFW/May 15, 1989 DFW-WRB/May 15, 1989 WRB-X68/May 15, 1989		X	
30	STS-28	OV-102	905	4	EDW-EDW/Aug. 18, 1989 EDW-SPS/Aug. 20, 1989 SPS-WRB/Aug. 20, 1989 WRB-X68/Aug. 21, 1989		X	
31	STS-34	OV-104	905	3	EDW-BIF/Oct. 28, 1989 BIF-CBM/Oct. 28, 1989 CBM-X68/Oct. 29, 1989		X	
32	STS-33	OV-103	905	4	EDW-EDW/Dec. 2, 1989 EDW-SKF/Dec. 3, 1989 SKF-VPS/Dec. 3, 1989 VPS-X68/Dec. 4, 1989		X	
33	STS-32	OV-102	905	3	EDW-DMA/Jan. 25, 1990 DMA-SKF/Jan. 25, 1990 SKF-X68/Jan. 26, 1990		X	
34	STS-36	OV-104	905	4	EDW-EDW/Mar. 10, 1990 EDW-BIF/Mar. 11, 1990 BIF-CBM/Mar. 13, 1990 CBM-X68/Mar. 13, 1990		X	
35	STS-31	OV-103	905	3	EDW-SPS/May 5, 1990 SPS-WRB/ May 6, 1990 WRB-X68/ May 7, 1990		X	
36	STS-41	OV-103	905	3	EDW-SPS/Oct. 15, 1990 SPS-VPS/Oct. 15, 1990 VPS-X68/Oct. 16, 1990		X	
37	STS-35	OV-102	905	5	EDW-EDW/Dec. 16, 1990 EDW-BIF/Dec. 18, 1990 BIF-SKF/Dec. 18, 1990 SKF-BAD/Dec. 19, 1990 BAD-X68/Dec. 21, 1990		X	
38	STS-37	OV-104	905	4	EDW-SKF/Apr. 16, 1991 SKF-CBM/Apr. 16, 1991 CBM-MCF/Apr. 17, 1991 MCF-X68/Apr. 18, 1991		X	
39	Delivery to KSC	OV-105	911	6	PMD-PMD/May 2, 1991 PMD-BIF/ May 3, 1991 BIF-SKF/May 5, 1991 SKF-EFD/May 6, 1991 EFD-CBM/May ‘6, 1991 CBM-X68/ May 7, 1991	X		

Seq. No.	Flight	Orbiter	SCA	Flight Legs	Flight Route/Date	Initial Delivery	Post-Mission	OMM/ OMDP
40	STS-40	OV-102	905	4	EDW-BIF/June 19, 1991 BIF-SKF/June 20, 1991 SKF-CBM/June 20, 1991 CBM-X68/June 21, 1991		X	
41	OMDP	OV-102	911	4	X68-X-68/Aug. 9, 1991 X68-MCF/Aug. 10, 1991 MCF-SKF/Aug. 12, 1991 SKF-PMD/Aug. 13, 1991			X
42	STS-48	OV-103	911	4	EDW-BIF/Sept. 24, 1991 BIF-TIK/ Sept. 24, 1991 TIK-CBM/Sept. 25, 1991 CBM-X68/Sept. 26, 1991		X	
43	STS-44	OV-104	911	2	EDW-SPS/Dec. 7, 1991 SPS-X68/Dec. 8, 1991		X	
44	OMDP	OV-102	905	3	PMD-PMD/Feb. 7, 1992 PMD-SKF/Feb. 9, 1992 SKF-X68/Feb. 9, 1992			X
45	STS-42	OV-103	905	5	EDW-EDW/Feb. 11, 1992 EDW-BIF/Feb. 14, 1992 BIF-CBM/Feb. 15, 1992 SKF-CBM/Feb. 16, 1992 CBM-X68/Feb. 16, 192		X	
46	STS-49	OV-105	911	4	EDW-EDW/May 21, 1992 EDW-BIF/May 27, 1992 BIF-SKF/May 29, 1992 SKF-X68/May 30, 1992		X	
47	OMDP	OV-104	911	3	X68-GGG/Oct. 18, 1992 GGG-BIF/Oct. 18, 1992 BIF-PMD/Oct. 18, 1992			X
48	STS-53	OV-103	911	3	EDW-SKF/Dec. 15, 1992 SKF-VPS/Dec. 18, 1992 VPS-X68/Dec. 18, 1992		X	
49	STS-55	OV-102	905	4	EDW-BIF/May 11, 1993 BIF-SKF/May 12, 1993 SKF-CBM/May 12, 1993 CBM-X68/May 14, 1993		X	
50	STS-58	OV-102	911	4	EDW-BIF/Nov. 7, 1993 BIF-SKF/ Nov. 7, 1993 SKF-CBM/ Nov. 7, 1993 CBM-X68/Nov. 8, 1993		X	
51	STS-59	OV-105	911	4	EDW-EDW/Apr. 26, 1994 EDW-ELP/Apr. 30, 1994 ELP-LRF/May 1, 1994 LRF-X68/May 3, 1994		X	

Seq. No.	Flight	Orbiter	SCA	Flight Legs	Flight Route/Date	Initial Delivery	Post-Mission	OMM/ OMDP
52	OMDP	OV-104	911	4	PMD-BIF/May 27, 1994 BIF-CBM/ May 28, 1994 CBM-WRB/May 28, 1994 WRB-X68/May 29, 1994			X
53	STS-64	OV-103	905	2	EDW-SKF/Sept. 26, 1994 SKF-X68/Sept. 27, 1994		X	
54	OMDP	OV-102	905	4	X68-HSV/Oct. 8, 1994 HSV-EFD/Oct. 10, 1994 EFD-BIF/Oct. 11, 1994 BIF-PMD/Oct. 11, 1994			X
55	STS-68	OV-105	911	4	EDW-BIF/Oct. 19, 1994 BIF-DYS/Oct. 19, 1994 DYS-VPS/Oct. 20, 1994 VPS-X68/Oct. 20, 1994		X	
56	STS-66	OV-104	911	3	EDW-SKF/Nov. 21, 1994 SKF-VPS/Nov. 21, 1994 VPS-X68/Nov. 22, 1994		X	
57	STS-67	OV-105	905	3	EDW-DYS/Mar. 26, 1995 DYS-CBM/Mar. 27, 1995 CBM-X68/Mar. 27, 1995		X	
58	OMDP	OV-102	905	2	PMD-EFD/Apr. 11, 1995 EFD-X68/Apr. 14, 1995			X
59	OMDP	OV-103	905	3	X-68-NFW/Sept. 27, 1995 NFW-SLC/Sept. 27, 1995 SLC-PMD/Sept. 28, 1995			X
60	STS-76	OV-104	905	5	EDW-EDW/Apr. 6, 1996 EDW-DMA/Apr. 11, 1996 DMA-DYS/Apr. 11, 1996 DYS-VPS/Apr. 12, 1996 VPS-X68/Apr. 12, 1996		X	
61	OMDP	OV-103	911	4	PMD-PMD/June 25, 1996 PMD-LTS/June 28, 1996 LTS-WRB/June 28, 1996 WRB-X68/June 29, 1996			X
62	OMDP	OV-105	911	2	X68-SKF/July 30, 1996 SKF-PMD/July 30, 1996			X
63	OMDP	OV-105	905	4	PMD-PMD/Mar. 25, 1997 PMD-NFW/Mar. 26, 1997 NFW-WRB/Mar. 26, 1997 WRB-X68/Mar. 27, 1997			X
64	OMDP	OV-104	911	2	X-68-TIK/ Nov. 11, 1997 TIK-PMD/Nov. 14, 1997			X
65	OMDP	OV-104	905	4	PMD-PMD/Sept. 22, 1998 PMD-GRK/Sept. 23, 1998 GRK-HOP/Sept. 23, 1998 HOP/X68/ Sept. 27, 1998			X

Seq. No.	Flight	Orbiter	SCA	Flight Legs	Flight Route/Date	Initial Delivery	Post-Mission	OMM/ OMDP
66	OMM	OV-102	905	2	X68-SZL/Sept. 24, 1999 SZL-PMD/Sept. 25, 1999			X
67	STS-9	OV-103	905	3	EDW-LTS/Nov. 2, 2000 LTS-SZL/Nov. 2, 2000 SZL-X68/Nov. 3, 2000		X	
68	OMM	OV-102	905	3	PMD-DYS/Mar. 1, 2001 DYS-CCAS/Mar. 4, 2001 CCAS-X68/Mar. 5, 2001			X
69	STS-98	OV-104	911	4	EDW-LTS/Mar. 1, 2001 LTS-BAD/Mar. 3, 2001 BAD/VPS/Mar. 3, 2001 VPS-X68/Mar. 4, 2001		X	
70	STS-100	OV-105	905	3	EDW-LTS/May 8, 2001 LTS-LRF/May 8, 2001 LRF-X68/May 9, 2001		X	
71	STS-111	OV-105	911	3	EDW-LTS/June 28, 2002 LTS-SZL/June 28, 2002 SZL-X68/June 29, 2002		X	
72	STS-114	OV-103	905	3	EDW-LTS/Aug. 19, 2005 LTS-BAD/Aug. 19, 2005 BAD-X68/Aug. 21, 2005		X	
73	STS-117	OV-104	905	4	EDW-AMA/July 1, 2007 AMA-OFF/July 1, 2007 OFF-HOP/July 2, 2007 HOP-X68/July 3, 2007		X	
74	STS-126	OV-105	911	4	EDW-BIF/Dec. 10, 2008 BIF-NFW/Dec. 10, 2008 NFW-BAD/Dec. 11, 2008 BAD-X68/Dec. 12, 2008		X	
75	STS-125	OV-104	911	4	EDW-BIF/June 1, 2009 BIF-SKF/June 2, 2009 SKF-CBM/June 2, 2009 CBM-X68/June 2, 2009		X	
76	STS-128	OV-103	911	4	EDW-AMA/Sept. 20, 2009 AMA-NFW/Sept. 20, 2009 NFW-BAD/Sept. 20, 2009 BAD-X68/Sept. 21, 2009		X	

SCA Ferry Flight Stops

Identifier	Airfield	Identifier	Airfield
ATL	Atlanta Intl., GA	IAD	Dulles Intl., VA
AMA	Rick Husband Amarillo Intl., TX	LRF	Little Rock AFB, AR
BAD	Barksdale AFB, LA	LTS	Altus AFB, OK
BFM	Mobile Downtown Airport, AL	PMD	Palmdale Plant, CA
BIF	Biggs Army Airfield/Ft. Bliss, TX	MCF	MacDill AFB, FL
BSM	Bergstrom AFB, TX	NFW	NAS Fort Worth, TX*
CBM	Columbus AFB, MS	OFF	Offutt AFB, NE
CCAS	Cape Canaveral AFS, FL	MCI	Kansas City Intl, MO
DEN	Denver Intl., CO	SKF	Kelly AFB/Kelly Field Annex, TX
DMA	Davis-Monthan AFB, AZ	SLC	Salt Lake City Intl., UT
DYS	Dyess AFB, TX	SNG	Northrop Strip, NM
EDW	Edwards AFB, CA	SPS	Sheppard AFB, TX
EFD	Ellington Field, TX	SZL	Whiteman AFB, MO
FWH	Carswell AFB, TX	STL	St. Louis Intl., MO.
GGG	Gregg County Airport, TX	TUL	Tulsa Intl., OK
GRK	Robert Gray Army Airfield/Ft. Hood, TX	VBG	Vandenberg AFB, CA
HIF	Hill AFB, UT	VPS	Eglin AFB, FL
HOP	Fort Campbell Army Airfield, KY	WRB	Warner/ Robbins AFB, GA
HSV	Huntsville Intl., AL	X68	KSC Shuttle Landing Facility, FL

*Formerly FWH

PART II. *DISCOVERY* (OV-103)

Structurally and materially, the three extant orbiters in the STS fleet, *Discovery* (OV-103), *Atlantis* (OV-104), and *Endeavour* (OV-105), appeared very much alike. However, as Gerald Blackburn, former Rockwell manager and forty-year veteran in the aerospace industry expressed,

> *I think for the average person looking at it, an orbiter is an orbiter is an orbiter – they all look the same. But it's like a race car driver, he knows the difference between the cars and the way they handle.*[311]

As Blackburn noted, *Challenger* was the most significantly different, because it was originally built as a test article for structural testing. "Structurally and materials-wise," the differences between *Discovery*, *Atlantis*, and *Endeavour* were minor.[312]

William (Bill) Roberts, former *Discovery* project engineer at Downey (1988-2002), reflecting on the history of the vehicle, reported that because she was the RTF vehicle after the *Challenger* accident, "all the best resources were put into that vehicle during that turnaround." The second OMDP, done at Palmdale in 1994, was "a unique one for 103 and the program" because it was the first time an orbiter underwent a number of weight-saving modifications. "Basically it was the first time an orbiter was torn apart to the level it was since it was built."[313] *Discovery* has flown the most, and was the first vehicle "that came out of the initial upgrades." Designed to be much lighter, it was the first vehicle to become one of the "high performance" vehicles compared to the previously built orbiters, according to Roberts.[314]

Prior to the *Challenger* accident, when NASA was preparing to launch the space shuttle from Vandenberg AFB, OV-103 was the dedicated vehicle for the Air Force. Because of this, she had a different TPS design.

> *Reentries coming into Vandenberg . . . had a higher cross range requirement, meaning as you're descending you had to come off of your normal inclination and turn into Vandenberg at a much farther distance from your normal trajectory, which means you had to put it down steeper and you're getting higher heat loads. So it had a different TPS design on the underbelly of the vehicle.*[315]

Discovery was the third orbiter built for operational use, following *Columbia* (OV-102) and *Challenger* (OV-099), and it retired as the oldest and most traveled of the three remaining orbiters in the Space Shuttle fleet. *Discovery* completed its thirty-ninth and final mission on

---

[311] Gerald Blackburn, interview by Rebecca Wright, *NASA STS Recordation Oral History Project*, August 24, 2010, http://www.jsc.nasa.gov/history/oral_histories/STS-R/BlackburnGA/BlackburnGA_8-24-10.htm.
[312] Blackburn, interview, 13.
[313] Roberts, interview, 8.
[314] Roberts, interview, 9.
[315] Roberts, interview, 10.

March 9, 2011. In twenty-seven years of service, beginning with its maiden launch on August 30, 1984, *Discovery* orbited the Earth 5,830 times, flew a total of 148,221,675 miles, carried 252 crewmembers to space, made thirteen missions to the ISS, and logged a total of 365 mission days – a year in space.[316]

NASA named *Discovery* after four British vessels: Henry Hudson's ship used in the 1610-11 voyage to find a Northwest passage between the Atlantic and Pacific oceans; *HMS Discovery* led by Captain James Cook, which was used to explore the South Pacific in the 1770s; a second *HMS Discovery* that was part of Captain George Nares' 1875-76 expedition to the North Pole; and the *RRS Discovery*, which carried Captain Robert Falcon Scott's crew during the 1901-04 *Discover Expedition* to Antarctica.

The following sections provide a description of *Discovery's* original assembly (Part IIA), and subsequent modifications (Part IIB), within the broader context of SSP-wide developments. Following the physical description of *Discovery's* systems (Part IIC), her missions and milestones are examined (Part IID). Part IIE concludes this section with a description of ground and ferry operations, which generally pertain to the entire orbiter fleet.

IIA. Manufacture and Assembly

Orbiter Manufacturers

The "production orbiter" OV-103 was built under Production Contract NAS9-14000, Schedule B, awarded to Rockwell International Corporation (now, The Boeing Company) on January 29, 1979.[317] The $1.9 billion contract also included the construction of OV-104 (*Atlantis*), the conversion of *Challenger* from a test vehicle (STA-099) into a flight orbiter, and major orbiter modifications. About 250 major subcontractors provided the approximately two million individual components, parts, and systems to Rockwell's Downey and Palmdale assembly facilities (see Figure Nos. B-1 through B-18 for representative photographs of individual components being manufactured).[318] Major structural components, including the upper and lower forward fuselage, the aft fuselage, the crew module, and the FRCS, were built and tested at Rockwell's Downey, California, facility. Other major structural modules were manufactured under subcontract to Rockwell's Space Transportation Systems Division. Rockwell selected McDonnell Douglas, St. Louis, Missouri, for the $50 million subcontract to build the OMS pods; Grumman Aerospace Corporation in Bethpage, New York, for $40 million, to build the orbiter wings (including the elevons); General Dynamics/ Convair Aerospace in San Diego, California,

[316] NASA KSC, *Space Shuttle Era Facts*.
[317] Chris Gebhardt, "After 26 Years, Workhorse Discovery Stands Ready for Final Mission," February 22, 2011, http://www.nasaspaceflight.com/2011/02/workhorse-discovery-stands-ready-for-final-mission/.
[318] NASA, "Space Transportation System Contractors." In *NSTS Shuttle Reference Manual*, 1988, 971-990; NASA, "Orbiter Manufacturing and Assembly," April 7, 2002, http://spaceflight.nasa.gov/shuttle/reference/shutref/manu/.

to build the midfuselage for $40 million, and Fairchild Industries/Fairchild Republic in Farmingdale, New York, to build the vertical tail, including the rudder/speed brake, for $13 million. North American Rockwell divisions in Tulsa, Oklahoma, and Columbus, Ohio, provided the orbiter payload doors and body flap, respectively.

General Orbiter Flow and Build Sequence

> *The thing I think was most interesting is people at Palmdale had an unwritten agreement with the astronauts. That agreement was to do the best job they could, to give 100 percent, to make sure that it was the best orbiter vehicle that we could ever deliver because of their safety.*[319]

The shuttle parts manufactured by contractors across the US (see table on the following page) were transported to Building 150 at the US AFP 42, Site 1 North, in Palmdale, California, for assembly into the orbiter *Discovery*. The 5,800-acre government-owned, contractor-operated plant is located approximately 50 miles north of Los Angeles. NASA signed a memorandum of agreement with the USAF in 1973 to use Building 150 for the assembly, integration, testing, and checkout of the orbiters. The final assembly of all flight-ready orbiters, as well as the orbiter prototype *Enterprise*, occurred in the building's two high bays.[320]

The general orbiter build sequence, as outlined by Boeing, began with the delivery of the mid-fuselage from the General Dynamics facility in San Diego.[321] After being offloaded, this major component was checked out, then placed in a work station for the installation of systems. Following delivery from Downey, the lower forward fuselage was assembled, checked out, and mated with the midfuselage. The aft compartment was fabricated and assembled at Downey; the auxiliary power unit (APU) system also was installed and checked out here. This subassembly was transported to Palmdale, where it was mated to the midfuselage. The crew module followed a similar path. The structure was manufactured and assembled at Downey, where the systems, including the airlock, were installed. Following checkout, the crew module was transported to Palmdale for installation of the avionics crew system, followed by mating. The upper forward fuselage followed from Downey. The orbiter wings, fabricated, assembled, and checked out at Grumman's facility in Bethpage, New York, were transported by ship from New York, to Long Beach, California, via the Panama Canal, then transported overland to Palmdale and installed in

[319] Robert H. Kahl, interview by Rebecca Wright, *NASA STS Recordation Oral History Project*, August 25, 2010, 3, http://www.jsc.nasa.gov/history/oral_histories/STS-R/KahlRH/KahlRH_8-25-10.htm.
[320] Archaeological Consultants Inc., "Shuttle Orbiter Final Assembly Building/Building 150," (documentation package, NASA JSC, 2007), 7, 11-12.
[321] Boeing, *Orbiter Vehicle Data Pack Document: Orbiter Vehicle Discovery (OV-103), Volume I,* (Huntington Beach, California: The Boeing Company, 2011), 269-272.

Manufacturers of Major Orbiter Components and Subcomponents[322]

Major component	Subcomponent	Manufacturer	Location
Midfuselage		Convair Aerospace Division of General Dynamics Corporation	San Diego, CA
Aft fuselage		Columbus Aircraft Division of Rockwell International (tooling)	Columbus, OH
		Los Angeles Aircraft Division (upper truss thrust structure)	Los Angeles, CA
Forward fuselage		Space Transportation Systems Division of Rockwell International	Downey, CA
	Crew module	Los Angeles Aircraft Division (panels)	Los Angeles, CA
		Avco (bulkheads)	Nashville, TN
		Vought Corporation (skins and bulkheads)	Dallas, TX
		Marvin Engineering (skins and ejection panels)	Inglewood, CA
		Merco Manufacturing Co. (star tracker panels)	Anaheim, CA
	Airlock	Space Transportation Systems Division of Rockwell International	Downey, CA
Wings		Grumman Corporation	Bethpage, NY
	Elevons	Grumman Corporation	Bethpage, NY
	Landing gear doors	Grumman Corporation	Bethpage, NY
Payload bay doors		Tulsa Division of Rockwell	Tulsa, OK
	Actuation system	Curtiss Wright	Caldwell, NJ
	Latches	Ball Brothers Research Corp.	Boulder, CO
	Signal processor	TRW Systems, Electronic Systems Division	Redondo Beach, CA
	Data interleaver	Harris Corp., Electronics Systems Division	Melbourne, FL
Forward reaction control system		Space Transportation Systems Division of Rockwell International	Downey, CA
	Fuel and oxidizer tanks	Martin Marietta	Denver, CO
	Thrusters	Marquardt Co., CCI Corp.	Van Nuys, CA
Vertical stabilizer		Fairchild Republic	Farmingdale, NY
	Rudder/speed brake	Fairchild Republic	Farmingdale, NY
OMS/ RCS pods		McDonnell Douglass	St. Louis, MO
	OMS engines	Aerojet General	Sacramento, CA
	RCS thrusters	Marquardt Co., CCI Corp.	Van Nuys, CA
Body Flap		Columbus Aircraft Division of Rockwell International	Columbus, OH

the vehicle. The vertical tail, made by Fairchild Republic in Farmingdale, New York, was conveyed to Palmdale via truck. At Palmdale, it was checked out and prepared for installation.

[322] NASA, "Space Transportation System Contractors," 971-990; Boeing, *OV-104, Volume I*, 282-304.

The payload bay doors followed from their manufacture site in Tulsa, Oklahoma. Following mating of the payload bay doors, the FRCS, manufactured, assembled, and checked out at Downey, was shipped to Palmdale, where it was prepped and mated. The nose and main landing gear, followed by the body flap, arrived from their manufacturing sites, and were offloaded, checked out, prepared for placement, and installed at Palmdale. The aft orbiter maneuvering system/reaction control system (OMS/RCS) pods, manufactured by McDonnell Douglas in St. Louis, Missouri, were transported by aircraft to the Palmdale assembly facility for installation of the TPS materials. They were not installed on *Discovery* at Palmdale, but were transported separately by aircraft to KSC.[323] After final assembly was completed, the orbiter underwent acceptance testing and final checkout, before being prepared for delivery to KSC.

Historically, according to Gerald Blackburn, the actual build cycle for the orbiter fleet was from about 1972, when long lead items were purchased for *Enterprise* (OV-101), to about 1992. *Columbia* (OV-102) took the longest to build, about seven years, from first lead item on through. Most of the other vehicles had a three to four year build cycle. "A lot of the lessons learned were on *Columbia*, which later translated into the rest of the fleet." [324] The most intense period of orbiter construction at Palmdale was from 1979 to 1986. In 1986, there were four orbiters at KSC.[325]

OV-103 Assembly

Construction of OV-103 began in August 1979, with the long lead fabrication of the crew module. During the latter half of 1980, fabrication of the wings, lower fuselage, and midfuselage was started, and structural assembly of the wings, crew module, midfusleage and aft fuselage were begun. Fabrication and assembly of the payload bay doors and body flap were initiated in March and October 1982, respectively.

In March 1982, major components for the assembly of OV-103 began to arrive at the Palmdale assembly facility, starting with the midfuselage, and followed by the elevons later that month. The wings and lower forward fuselage were delivered to Palmdale at the end of April 1982; both were attached to the mid-fuselage in May. The upper forward fuselage arrived in July, the vertical stabilizer in August, the body flap in October, and the crew module in December. Also, installation of the TPS tiles was under way by October 1982. A pictorial representation of the final assembly of *Discovery* is provided in Figure Nos. B-19 through B-58.

The aft fuselage was delivered in January 1983 and installed that month. Also in January, the crew module and upper forward fuselage were installed. The OMS pods also arrived in January, and in February, the FRCS arrived. A fit-check was completed, and then the FRCS was set up

[323] Boeing, *OV-103, Volume I*, 261. The OMS/RCS pods could be interchanged between vehicles as required to accommodate maintenance and schedule requirements.
[324] Blackburn, interview, 11.
[325] Blackburn, interview, 14.

under a temporary clean room for inspections. In March 1983, the four sections of the payload bay doors were installed. First was the forward port door, then the forward starboard door, followed by the aft port and starboard doors, respectively. The FRCS and the body flap were installed in June.[326] Throughout this time, a number of smaller shuttle components were installed. Final assembly of *Discovery* concluded on August 12, 1983. Post-checkout was completed on September 9, 1983, and testing and other work continued on OV-103 over the next month.

Discovery was rolled out of Building 150 on October 16, 1983 (Figure No. B-59). It weighed 151,419 pounds without the SSMEs, about 6,870 pounds less than *Columbia.* From Palmdale, *Discovery* was transported overland to DFRC, mated to the SCA (Figure No. B-60), and flown to KSC, where it arrived on November 9, 1983.

Over the next six months, *Discovery* spent time in both the OPF for processing, and the VAB for storage. Beginning on May 12, 1984, the ET and SRBs were attached to *Discovery*, and all were moved to LC 39A one week later. On June 2, the SSMEs were tested for twenty seconds as part of a flight readiness firing of the main propulsion system. Deemed a success, *Discovery*'s first launch was scheduled for June 25.[327] The key events and dates for *Discovery's* build sequence are summarized in the following table.

[326] Archaeological Consultants Inc., "Shuttle Orbiter Final Assembly Building/Building 150," 16-17.
[327] Chris Gebhardt, "After 26 Years."

Key Events and Dates in the Construction of OV-103[328]

Date	Event
August 27, 1979	Long lead fabrication of the crew module starts
June 1, 1980	Fabrication and assembly of wings starts
June 20, 1980	Lower fuselage fabrication starts
September 29, 1980	Assembly of crew module starts
October 1, 1980	Assembly and fabrication of mid-fuselage starts
November 10, 1980	Structural assembly of aft fuselage starts
December 8, 1980	Initial installation of the aft fuselage starts
March 2, 1981	Fabrication and assembly of payload bay doors starts
October 19, 1981	Body flap detailed assembly and fabrication starts
October 26, 1981	Initial system installation into the crew module starts in Downey, Calif.
January 4, 1982	Initial system installation of the upper forward fuselage starts
March 16, 1982	Midfuselage delivered to Rockwell International's facility in Palmdale
March 30, 1982	Elevons delivered to Palmdale
April 30, 1982	Wings arrive at AFP 42 from the Grumman Corporation
April 30, 1982	Lower forward fuselage on dock in Palmdale
July 16, 1982	Upper forward fuselage on dock in Palmdale
August 5, 1982	Vertical stabilizer on dock in Palmdale
September 3, 1982	Final assembly starts
October 15, 1982	Body flap on dock in Palmdale
December 28, 1982	Crew module on dock in Palmdale
January 11, 1983	Aft fuselage on dock in Palmdale
February 25, 1983	Final assembly completed and closeout installation in Palmdale
February 28, 1983	Initial subsystems test starts and power-on in Palmdale
May 13, 1983	Initial subsystems testing completed
July 26, 1983	Subsystems testing completed
August 12, 1983	Final acceptance completed
September 9, 1983	Post-checkout completed in Palmdale
October 16, 1983	Rollout from Palmdale
October 28, 1983	First SSME on dock at KSC
November 5, 1983	Overland transport from Palmdale to DFRC
November 6, 1983	Flight from Edwards Air Force Base to Vandenberg Air Force Base
November 8, 1983	Flight from Vandenberg Air Force Base to Carswell Air Force Base in Texas
November 9, 1983	Flight from Carswell Air Force Base in Texas to KSC
November 15, 1983	Modification starts at the Orbiter Processing Facility
December 22, 1983	Second SSME on dock at KSC
January 5, 1984	Third SSME on dock at KSC
June 2, 1984	Flight Readiness Firing
August 30, 1984	First Flight (STS-41D)

[328] NASA KSC, "Space Shuttle Overview: *Discovery* (OV-103)," December 8, 2008, http://www-pao.ksc.nasa.gov/shuttle/resources/orbiters/discovery.html.

IIB. Major Modifications

General Overview

Until 2002, all major mid-life overhauls of the orbiters, including both OMDP and OMM activities, were accomplished at Palmdale.[329] The last OMM at Palmdale, for OV-102, was performed during a 517-day period between September 26, 1999, and February 23, 2001. Starting with OV-103 in September 2002, NASA relocated the orbiter overhaul and upgrade activities from Palmdale to KSC, on the basis of both cost factors and program impacts. When OMDPs/OMMs were performed at Palmdale, USA subcontracted the work to Boeing. When modifications were done at KSC, USA performed the work.[330]

The SSP required an OMM every eight flights for each orbiter, or approximately every three years.[331] Work included the incorporation of new equipment or changes to existing equipment or structures, and both routine and special inspections. Inspections were to verify structural integrity and to identify and mitigate any corrosion or wear of components.[332] Maintenance procedures, deferred work, and correcting "stumble ons" also were performed during an OMDP. Of the twelve OMMs performed in the history of the SSP, eight were performed at the Palmdale facility, and four at KSC. Historically, the duration of each OMM has varied from 5.7 months to 19.5 months. The 1997-1998 OMM of *Atlantis* (OV-104), which included the first installation of the MEDS "glass cockpit," was "the most extensive orbiter modification and maintenance project in the program's history;" it entailed 443 structural inspections and 363 modifications.[333]

Typically, OMMs and upgrades served a number of purposes: to improve safety, to enhance performance, to improve ground turnaround processing, to add new technology, to cut operational costs, to add capability, and to combat obsolescence. In terms of level of importance when it comes to implementation, Bill Roberts believed that "Safety is number one, flight performance number two, and then ground turnaround processing."[334] In addition to the major changes in the aftermath of the *Challenger* (RTF-1) and *Columbia* (RTF-2) accidents, orbiter

---

[329] An OMDP is defined by NASA as a period of time when one of the orbiters is taken out of service for detailed structural inspections and thorough testing of its systems before returning to operational status. These periods also provided opportunities for major modifications and upgrades. (NASA, "Human Space Flight Fiscal Year 1996 Estimate Budget Summary," http://www.hq.nasa.gov/office/budget/fy96/hsf_3.html). Given the variety of applications of the terms OMDP and OMM in the source literature, OMDP and OMM generally are used synonymously throughout this document.

[330] NASA Office of Inspector General, "Followup Audit on Orbiter Maintenance Down Periods at KSC," 1998, http://www.hq.nasa.gov/office/oig/hq/audits/reports/FY98/executive_summary/ig-98-016e.

[331] In actuality, this interval was exceeded because of scheduling complexities. For example, OV-102 had nine flights and four years between its J2 and J3 OMMs; OV-103 had nine flights and four and one-half years between its J2 and J3. CAIB, *Report, Volume II*, 415.

[332] Boeing, *OV-103, Volume II*, 52.

[333] Jay Levine, "Inside Atlantis Modifications and Maintenance near end in Palmdale," *X-Press*, September 18, 1998, 4, http://www.dfrc.nasa.gov/Newsroom/X-Press/1998/Sep18-TX/page4-TX.html.

[334] Roberts, interview, 37.

modifications were made to support specific mission goals, such as extending flight duration in support of the ISS. Other upgrades were part of programmatic weight reduction measures. Also, many changes were implemented during process flows between flights. As the last orbiter to join the fleet, *Endeavour* benefitted from lessons learned. Thus, it was originally built with a drag chute, improved nose wheel steering system, improved hydraulic power units, and upgraded avionics systems, all features which the other orbiters acquired during later, post-assembly modifications.[335] The following table provides the start and end dates, as well as duration, for each OMM performed during the SSP.

Schedule of Orbiter Major Modifications[336]

Orbiter Vehicle	OMM Designation	OMM Start Date	OMM End Date	Duration (in months)
OV-102	"AA"	January 25, 1984	September 11, 1985	18
OV-102	(non-OMDP) (J1)	August 15, 1991	February 7, 1992	5.7
OV-103*	OMDP-1 (J1)	February 17, 1992	August 17, 1992	7
OV-104	OMDP-1 (J1)	October 19, 1992	May 27, 1994	19.5
OV-102	OMDP-1 (J2)	October 13, 1994	April 10, 1995	6
OV-103	OMDP-2 (J2)	September 29, 1995	June 24, 1996	9
OV-105	OMDP-1 (J1)	July 30, 1996	March 24, 1997	8
OV-104	OMDP-2 (J2)	November 14, 1997	September 21, 1998	10.2
OV-102	OMDP-2 (J3)	September 26, 1999	February 23, 2001	17
OV-103*	OMDP-3 (J3)	September 1, 2002	April 1, 2004	19
OV-104*	RTF-2	June 2003	September 2006	28
OV-105*	OMDP-2	December 1, 2003	October 6, 2005	22

*Performed at KSC

Historically, during the first decade of the SSP, NASA undertook major upgrade programs to respond to problems and anomalies experienced during the initial flights. These initial upgrades included the replacement of several thousand insulation tiles with insulation blankets, and modifications to the wheel brakes and APUs.[337] During the approximate two-and-one-half year post-*Challenger* RTF period, more than 200 changes were made to the shuttle system, including the addition of a limited crew escape capacity, stronger landing gear, more powerful flight control computers, and updated inertial navigation equipment.[338] In the early 1990s, structural modifications enabled the shuttle to rendezvous and dock with the *Mir* space station and to support the ISS. Included was the development of a new airlock and docking system as well as weight reductions to allow for increased payload capacity. In the early 1990s, orbiter storage hardware was changed from aluminum to composite or fabric structure.[339] These modifications

[335] USA Communications, "Orbiter Upgrades," *Shuttle Reference and Data*, April 6, 2000, http://www.shuttlepresskit.com/STS-101/REF125.htm.
[336] Boeing, *OV-103, Volume II*, 52; Boeing, *OV-104, Volume II*, 47; CAIB, *Report, Volume II*, 416.
[337] National Research Council, *Upgrading the Space Shuttle* (Washington, DC: National Academy Press, 1999), 9.
[338] NASA JSC, *The 21st Century Space Shuttle*, NASA Fact Sheet (Houston: Johnson Space Center, 2000), spaceflight.nasa.gov/spacenews/factsheets/pdfs/21stCenturyShuttle.pdf.
[339] NASA, *Space Shuttle Program 1999 Annual Report*, 23, http://www.spaceflight.nasa.gov/shuttle/reference/.

resulted in a total weight reduction of more than 600 pounds, as detailed in the table which follows below.

In FY 1997, NASA lifted a "design freeze," imposed the year before, and authorized the SSP to dedicate about $100 million each year to a new upgrade program. This funding went primarily to relatively minor modifications intended to "reduce obsolescence, support missions, improve safety, and reduce costs."[340] In the standdown following the 2003 *Columbia* accident, safety improvements included the expanded use of enhanced imaging equipment, such as the cameras and devices housed in the new OBSS.

Weight Reductions

Like the external tanks, a major evolutionary change for the five operational orbiters was a decrease in overall weight over time. Beginning with *Challenger*, each orbiter was lighter than her predecessor as knowledge was applied from prior construction and assembly. At rollout, *Columbia*, the heaviest orbiter, weighed 158,289 pounds. *Challenger* weighed 155,400 pounds; *Discovery* weighed 151,419 pounds; *Atlantis* weighed 151,315 pounds; and *Endeavour* weighed 151,205 pounds. *Endeavour*, in particular, benefited from the lessons learned from the older shuttles.[341]

Orbiter Storage Hardware Weight Reductions[342]

Part Description	Old Weight	New Weight	Weight Reduction
Lithium hydroxide rack assembly	97	27	70
Ceiling pallet	30	13	17
Floor pallet	27	14	13
External airlock pallet	47	26	21
Pallet assembly EMU (Extravehicular Mobility Unit) adapter	36	22	14
Locker trays (shipset)	164	75	89
Mid-deck lockers (shipset)	495	295	200
Mid-deck accommodations rack	220	100	120
Tool stowage assembly	150	75	75
Totals	1266	647	619

Beginning in 1995, crew seats were made with aluminum alloys, which cut their weight from 110 pounds to 49 pounds.[343] Since the mid-1990s, weight was decreased on the shuttles during OMDPs/OMMs, including the switchover from AFRSI to FRSI on the canopy and wing tip was

[340] National Research Council, *Upgrading the Space Shuttle*, 1. Implementation of major upgrades was contingent upon whether the shuttle would be phased out by 2012.
[341] Jenkins, *Space Shuttle*, 242-243.
[342] NASA, *Space Shuttle Program 1999 Annual Report*, 23.
[343] Michael Klesius, "Evolution of the Space Shuttle," *Air & Space Magazine*, July 2010, http://www.airspacemag.com/space-exploration/Evolution-of-the-Space-Shuttle.html.

made during the second OMDP for both *Discovery* and *Atlantis*, and during the first OMDP for *Endeavour*. Similarly, the wheel well tape replacement and redesign of the flipper doors were made during *Discovery* and *Atlantis*' second OMDP, and *Endeavour's* first. Crew equipment hardware changes were effected during the first OMDP for both *Discovery* and *Atlantis*; this weight saving measure was incorporated into *Endeavour's* original build. The modifications resulted in 1,652 pounds of savings, in addition to the approximately 600 pounds that was removed from the orbiter's storage hardware in the early 1990s, as already noted.[344] These weight-saving modifications are provided in the following table.

Summary of Orbiter Weight Saving Modifications[345]

Modification	Weight Savings (in pounds)
TPS Modifications	
Payload bay doors and mid AFRSI to FRSI	490
Canopy and Wing Tip AFRSI to FRSI	137
Upper Wing AFRSI resizing	70
Aft fuselage sidewall AFRSI to FRSI	101
Wing and Elevon FRSI resizing	30
Payload bay doors FRSI resizing	126
Subtotal	**954**
Other Modifications	
Wheel Well Tape Replacement	39
Flipper Door Redesign	520
Delete OMS/RCS High Point Bleed Lines	30
Delete RCS Sniff Lines	60
Delete FRCS Heat Sink	49
Subtotal	**698**
Crew Equipment Hardware	500-600

Post- Challenger and Post-Columbia Major Modifications

Significant changes were made to the orbiter fleet in the aftermath of both the *Challenger* and *Columbia* accidents. In the aftermath of the *Challenger* accident, and following the recommendations of the Rogers Commission, the orbiters each received seventy-six modifications.[346] The most significant changes during this effort included a crew escape system, carbon brakes, a new drag chute, and improved nose wheel steering and brake controls.

Crew escape system: NASA initially believed a crew escape system was unnecessary on the shuttles.[347] However, in the aftermath of the *Challenger* accident, the Rogers Commission

[344] Boeing, *OV-104, Volume II*, 64.
[345] Information derived from Boeing, *OV-104, Volume II*, 61-64.
[346] Jenkins, *Space Shuttle*, 278-282.
[347] On the first four shuttle missions, *Columbia* had ejection seats for two astronauts. On STS-5, with a crew of five, the seats were disabled. After STS-9 (November-December 1983), the seats were removed. Klesius, "Evolution of

recommended its implementation. After considering their options, NASA elected to install a telescopic slide pole in the orbiters. In an emergency, the side hatch on the shuttle would be jettisoned, the pole would be extended, and the astronaut(s) would slide down the pole and parachute to safety. As designed, the system was effective when the orbiter was below 30,000' and in a glide no faster than 230 miles per hour (mph).[348] *Discovery* was the first orbiter to undergo the modification, and work was completed on April 15, 1988, in time for RTF-1. Thereafter, the crew escape system was installed in *Atlantis* and *Columbia* and built into *Endeavour* at the time of original construction.[349]

Carbon brakes: Following the *Challenger* accident, the original beryllium brakes were replaced with carbon brakes. This design improvement increased the reuse and refurbishment capability while minimizing weight. Historically, the original brakes on each of the main landing gear wheels were designed for a lighter shuttle than was created, and brake damage occurred on the first twenty-four space shuttle landings. As a result, shuttle weight constraints were instituted, brake use was limited to speeds of 205 mph or less, and landings were restricted to Edwards AFB after *Discovery* blew a tire at KSC in 1985. During RTF-1 modifications, improved carbon-lined beryllium stator discs were installed on *Discovery* and *Atlantis* as a temporary solution, and a program was created to develop all-carbon brakes. Those brakes premiered in 1990 on *Discovery* for STS-31, and subsequently were installed on the other orbiters during OMDPs. The new brakes functioned at braking speeds of up to 260 mph and could stop quicker than the first two shuttle brake systems. They also were capable of reuse on up to twenty landings, as opposed to the one-time use for their predecessors.[350]

Orbiter Drag Chute: NASA originally intended the space shuttles to have a parachute braking system, but the idea was abandoned in 1974 because it was believed Edwards AFB's dry lake bed provided sufficient landing distance. As a result, without a drag chute system, orbiter landings in the early days of the SSP resulted in excess tire and brake wear. *Endeavour's* landing at Edwards AFB at the conclusion of STS-49 (May 1992) was the first use of a drag chute to reduce wear on the brakes and reduce rollout distance by up to 2,000 feet. The orbiter drag chute also increased vehicle stability when directional control input was required. *Endeavour* received its drag chute as part of her original build; the other orbiters were retrofitted with this feature during OMDPs in the early 1990s.[351] The new drag chute system, built by Rockwell at the Downey plant, consisted of a mortar-deployed pilot chute that extracted the deceleration drag chute. It was designed to stop the shuttle in 8,000' with a 10 knot tail wind and a temperature of 103 degrees F. The drag chute was manually deployed after touchdown at speeds of 230 knots or less, and was jettisoned at approximately 60 knots to prevent damage to the SSME bells.[352]

---

the Space Shuttle."
[348] Klesius, "Evolution of the Space Shuttle."
[349] Jenkins, *Space Shuttle*, 370-371.
[350] Jenkins, *Space Shuttle*, 410-411.
[351] Boeing, *OV-103, Volume II*, 57.
[352] Jenkins, *Space Shuttle*, 411 and 437.

Development of the drag chute was preceded by tests of an experimental drag chute carried on NASA's NB-52B research aircraft. In 1990, researchers at DFRC conducted a series of eight chute deployment tests, landing at speeds ranging from 160 to 230 miles per hour. Landings were made at both the lakebed runways and concrete strip at Edwards AFB. The successful test series "helped validate the effectiveness of the chute in reducing the rollout distance and brake wear during shuttle landings."[353]

Improved Nose Wheel Steering System: Installation of this modification consisted of hydraulics and avionics upgrades which improved the systems' performance and reliability. Originally, the nose wheel steering system installed on *Columbia* was not effective at maneuvers conducted at high speeds, and it was deactivated on that shuttle. *Challenger* also had the system, but it was never activated; both *Atlantis* and *Discovery* had the capability for nose wheel steering installation, but it was never effected on either. Beginning in 1991, the nose wheel steering systems on *Columbia*, *Atlantis*, and *Discovery* were modified; *Endeavour*, which rolled out that year, was built with the new nose wheel steering system already in place. The improvement provided better control and was operable electro-hydraulically through either the general purpose computers or the rudder pedals.[354]

The **post-*Columbia* RTF modifications** included several changes to the orbiter wing, as well as the addition of the new OBSS to allow for the inspection of the shuttle TPS system while on-orbit. The heat shields on the wings were sent back to the manufacturers for thorough study, and the tail rudders and speed brakes were repaired.[355] On the wings, the front spar was reworked to counter sneak flow, gap fillers were implemented to impede hot gas intrusion, and impact sensors were added. Redesigned ET electrical and fuel umbilical doors were installed, as were redesigned payload bay door joint seals. Removable harnesses were added to the electrical connections that linked the ET and orbiter, and new FRCS rain covers were added.[356] Four "hardening" initiatives were implemented on all of the orbiters to increase the impact resistance and to reduce existing design vulnerabilities. These included front spar sneak flow protection for RCC panels 5 through 13; main landing gear corner void elimination; FRCS carrier panel redesign to eliminate bonded studs; and the replacement of side windows 1 and 6 with thicker outer thermal panes.[357] A description of selected changes follows.

Wing Leading Edge (WLE) Front Spar Protection for Sneak Flow: Materials were added to the exposed lower 2" of the wing leading edge front spar to protect against hot gas flow ("sneak

---

[353] Peter W. Merlin, "Drag Chute Reduced Shuttles' Brake and Tire Wear," September 12, 2011, http://www.nasa.gov/mission_pages/shuttle/flyout/B-52_drag_chute_tests_prt.htm.
[354] Boeing, *OV-104, Volume II*, 51; Jenkins, *Space Shuttle*, 407, 408 and 437.
[355] Pat Duggins, *Final Countdown: NASA and the End of the Space Shuttle Program* (Gainesville, Florida: University Press of Florida, 2007), 193-200.
[356] Boeing, *OV-103, Volume II*, 54-92.
[357] NASA, *NASA's Implementation Plan*, 1-21.

flow") and convective heating conditions, in the event of a 0.25" hole in the lower RCC surface.[358]

WLE Horse Collar Gap Filler Redesign: The WLE horse collar gap fillers, located in the substructure behind the RCC panels, were redesigned with the addition of a 0.5" sleeve for redundancy to protect the lower access panel. The additional sleeving was to prevent hot gas intrusion into the WLE cavity in the event of a partial carrier tile loss.[359]

Wing sensors: Though it was not a recommendation by the CAIB, after January 2003, NASA installed eighty-eight sensors on each shuttle WLE behind the RCC panels during post-*Columbia* RTF modifications to monitor the condition of the wings. The eighty-eight sensors included sixty-six accelerometers to detect impacts and gauge their strength and location. Each made 20,000 readings per second to detect impacts.[360] In addition, twenty-two temperature sensors measured how heat was distributed across the wing spans. The data collected by the sensors during liftoff was collected by a laptop computer on the flight deck and then sent to the Mission Control Center once the ET was jettisoned.

Orbiter Boom Sensor System: The OBSS was created in the aftermath of the *Columbia* accident in response to the CAIB recommendation for on-orbit shuttle inspections. The Canadian Space Agency designed and constructed the OBSS as a 50' extension of the Remote Manipulator System (RMS).[361] This extension allowed the arm to reach around the spacecraft for the best possible views. The OBSS included a pair of sensor systems with cameras and lasers to inspect the TPS after each lift-off and before each landing.[362] The boom extension housed a laser camera system and a laser-powered measuring device, as well as a television camera and a digital camera. Installed on the starboard side of the payload bay, the OBSS was used to inspect the WLE RCC, and to measure the depth of damage sustained by the orbiter's TPS during launch. It also had the "capability to support an EVA crewmember in foot restraints for focused inspection and repair activities."[363] The OBSS debuted with STS-114 in July 2005.

---

[358] Boeing, *OV-104, Volume II*, 73.
[359] Boeing, *OV-104, Volume II*, 74.
[360] Klesius, "Evolution of the Space Shuttle;" NASA KSC, "Shuttle in Shipshape: Part II," March 8, 2005, http://www.nasa.gov/returntoflight/system/rtfupgrades_partII.htm.
[361] The shuttle RMS consists of a 50'-long robot arm and hand with three joints, mounted on the port side of the payload bay. It was built by the Canadian Space Agency, and first used on STS-2 (November 1981). In 2000, all the joints were refurbished, the gear boxes and motor modules were replaced, and asbestos brakes were replaced with ceramic ones. Klesius, "Evolution of the Space Shuttle."
[362] Boeing, *OV-104, Volume II*, 75; NASA, *NASA's Implementation Plan*, 1-33.
[363] Klesius, "Evolution of the Space Shuttle."

Space Station Support Upgrades

Upgrades implemented in the 1990s were related to the support of missions to *Mir* and the ISS. These included Extended Duration Orbiter (EDO) upgrades, as well as a new payload bay airlock and docking system.

Extended Duration Orbiter: *Columbia* was the first orbiter to be modified for extended duration flight. A new suite of upgrades first flew on STS-50 (June 1992). These changes included an improved toilet; a regenerative system to remove carbon dioxide from the air; connections for a pallet of additional hydrogen and oxygen tanks to be mounted in the payload bay; and extra stowage room in the crew compartment.[364] A fifth set of cryogenic tanks were added to *Discovery* during OMDP-2. This was done so the orbiter could remain in space longer when it began to fly missions to the ISS later that decade.[365]

Orbiter Docking System and External Airlock: The orbiter docking system (ODS) was created so that the shuttle could link with the Russian space station *Mir* and the ISS and provide a secure external airlock. The original airlock, which measured 150 cubic feet, was located inside the middeck. It featured one hatch opening into the middeck and the other into the payload bay. To support missions to the space stations, the airlock was enlarged to 185 cubic feet and relocated to the payload bay. A third hatch was added on top for docking with *Mir* (1995-1998) and the ISS (starting with STS-88, December 1998). The new airlock provided an air tight tunnel between the shuttle and station.[366] The ODS initiative began in July 1992, and the prototype was installed on *Atlantis* two years later; the approximate project cost was $95.2 million. The external airlock was first flown on STS-71 (June 1995). The ODS later was installed on *Discovery* and *Endeavour*. After assembly of the ISS started, *Atlantis*' interim ODS was modified.[367] The success of the ODS was integral before construction of the ISS proceeded. It facilitated the exchange of crew members and cargo between the orbiters and *Mir* and demonstrated that the ISS was feasible.[368]

The ODS, placed on top of the external airlock, was a Russian-supplied piece of hardware basically designed to be compatible with *Mir*.[369] The ODS docking base was a metal structure on which the Russian-built docking mechanism was mounted. The four electrical connectors in which power, commands, and data were transferred between the orbiter and ISS were mounted on the docking base. The docking base housed supporting ODS wiring. The docking system was not put on the airlock at Palmdale, but rather installed at KSC.[370]

---

[364] NASA JSC, "The 21st Century Space Shuttle."
[365] Bruce Buckingham, "Discovery Scheduled to Depart KSC for Orbiter Modifications in Palmdale, Calif.," NASA news release, September 25, 1995, http://www-pao.ksc.nasa.gov/kscpao/release/1995/94-95.htm.
[366] Boeing, *OV-104, Volume II*, 67.
[367] Jenkins, *Space Shuttle*, 326, 381-382.
[368] Duggins, *Final Countdown*, 124-125.
[369] Roberts, interview, 35.
[370] Roberts, interview, 35.

Other Significant Orbiter Modifications

Additional changes to the orbiter structure or systems were done to improve safety (e.g., improved main landing gear tire and wheel assembly), to upgrade technology (e.g., MEDS; Station to Shuttle Power Transfer System (SSPTS); 3-String GPS), to correct in-flight problems (e.g., fuel cell performance monitoring; forward reaction control system rain cover redesign), or to address post-flight anomalies (forward attach/ET fitting stud redesign). In a series of orbiter "Data Packs," Boeing described more than thirty "significant" orbiter modifications, and the respective time of implementation, for OV-103, OV-104, and OV-105. A brief description of these changes, and a summary table, follow.

Structural criteria (Loads database): *Enterprise*, *Challenger*, and *Columbia* were designed with structural design criteria (loads database) of 5.1; during construction it was realized that a 5.4 loads database was necessary. *Challenger* was modified during conversion from a test article to a flight orbiter in 1981, and *Columbia* was modified after STS-9 in 1983. *Discovery*, *Atlantis*, and *Endeavour* were built with the stronger load criteria. Wing strength criteria rose to a 6.0 loads database in 1992 in an effort to raise the orbiter landing weight to 250,000 pounds, and each space shuttle was modified during OMDPs.[371] After the orbiter structural criteria were increased, *Discovery* and *Atlantis* were built with lighter wings in order to save orbiter weight. However, data acquired during *Columbia's* first flights drew questions about the decreased wing strength, and the wings on *Discovery* and *Atlantis* were strengthened during OMDPs. *Endeavour* was built with the stronger wings.[372]

Improved Main Landing Gear Tire and Wheel Assembly: Early in the SSP, NASA set out to improve shuttle landings. The main landing gear wheel and tire assembly was redesigned to improve safety margins for higher touchdown speeds and vertical loads. A new larger size tire design incorporated two additional carcass plies, grooveless tread, and higher rated pressure. Two added nylon plies (eighteen plies total) increased tire structural strength. The removal of tire tread grooves improved wear.[373] The main landing gear's axle was thickened to provide more resistance, to reduce the chance of brake damage, and to decrease tire wear. Additionally, openings were cut in the main landing gear's hydraulic passages in the piston housing to stop pressure surges and damage when the brakes were pumped; the electronic brake control boxes were upgraded to equally distribute hydraulic brake pressure; and the anti-skid detector was removed. Finally, gauges were added to the nose and every main landing gear wheel to keep track of tire pressure before, during, and after each flight.[374]

---

[371] Jenkins, *Space Shuttle*, 242.
[372] Jenkins, *Space Shuttle*, 242.
[373] Boeing, *OV-104, Volume II*, 71.
[374] NASA, *NSTS 1988 News Reference Manual* (Florida: Kennedy Space Center, 1988), http://science.ksc.nasa.gov/shuttle/technology/sts-newsref/.

Significant Orbiter Modifications[375]

Modification	Implementation Period		
	OV-103	**OV-104**	**OV-105**
Improved Nose Wheel Steering System	OMM-1	OMM-1	Original Build
Five Rotor Structural Carbon Brake	Flt -10/Apr. '90	Flt-8/Apr. '91	Original Build
Orbiter Drag Chute	OMM-1	OMM-1	Original Build
Orbiter ET Umbilical Door Latch and Drive Actuators	OMM-3	OMM-2	OMM-1
Tire Pressure Monitoring Improvement	OMM-2	OMM-2	Original Build
ET Door Drive "C" Link Bolts	Flt-23/Aug. '97	Flt-20/Sept. '07	Flt-12/Jan. '90
Payload Bay Door Expansion Joint Dog-Bone Redesign	OMM-3	OMM-2	OMM-1
Main Propulsion System 17-inch Disconnect	OMM-2	OMM-2	OMM-1
Multifunction Electronic Display Subsystem (MEDS)	OMM-3	OMM-2	OMM-1
Orbiter Docking System (ODS) – External Airlock	OMM-2	OMM-2	OMM-1
ODS	OMM-2	OMM-2	OMM-1
Radiator Shield and Isolation Modification	OMM-3	OMM-2	Flt-14/ Feb.'00
Fuel Cell Performance Monitoring	Flt-24/June '98	OMM-2	Flt-12/Jan. '98
Improved Main Landing Gear Tire and Wheel Assembly	Flt-32/July '06	Flt-29/Feb. '07	Flt-20/Aug. '07
Monoball Production Break	OMM-3	Flt-25/Apr. '02	Flt-17/Dec. '01
Wing Leading Edge (WLE) Front Spar Protection for Sneak Flow	Flt-31/July '05	Flt-27/Feb. '07	Flt-20/Aug. '07
WLE Horse Collar Gap Filler Redesign	Flt-31/July '05	Flt-27/Feb. '07	Flt-20/Aug. '07
Orbiter Boom Sensor System (OBSS)	Flt-31/July '05	Flt-27/Feb. '07	Flt-20/Aug. '07
Forward Attach/ET Fitting Stud Redesign	Flt-32/July '06	Flt-28/June '07	Flt-20/Aug. '07
Orbiter Wiring Connector-Saver Redesign	OMM-1	OMM-1	OMM-2
ET Aft Attach Material Change	Flt-31/July '05	Flt-27/Feb. '07	Flt-20/Aug. '07
UHF Space Communication System	OMM-2	OMM-2	OMM-1
Orbiter/ET Separation Debris Containment	OMM-2	Flt-13/Nov. '94	Flt-8/March '95
FRCS Rain Cover Redesign	Flt-31/July '05	Flt-27/Feb. '07	Flt-20/Aug. '07
APU Heating Modification	Flt-37/Aug. '09	Flt-30/May '09	Flt-23/July '09
X_o1040 and X_o1090 Mid Fuselage/Boron Aluminum Strut Replacement	Flt-24/June '98	Flt-21/May '00	Flt-14/Feb. '00
Rudder Speed Brake Inconel Thermal Barrier Redesign	Flt-38/Apr. '10	Flt-31/Nov. '09	Flt-24/Feb. '10
Emergency Egress Slide Deployment Mechanism Improvement	OMM-2	OMM-2	Original Build
Orbiter Floor Reinforcement for 20G Seat Loads	OMM-2	OMM-2	OMM-1
Station to Shuttle Power Transfer System (SSPTS)	Flt-34/Oct. '07	N/A	Flt-20/Aug. '07
3-String Global Positioning System (GPS)	N/A	N/A	OMDP-1

Multifunction Electronic Display Subsystem: The Multifunction CRT (Cathode Ray Tube) Display System was state-of-the-art when it was installed in the space shuttle cockpits beginning in the late 1970s. However, by 1988, glass cockpits with multicolor displays and true graphics were common in commercial airplanes, and a study began to determine if they could be utilized by the space shuttle fleet. In 1992, NASA started a $209 million cockpit upgrade program, which included the MEDS. Installation began during OMDPs four years later. Initially, the plan called for the MEDS to be installed in two phases at KSC, but it was decided that the system could be

[375] Boeing, *OV-103, Volume II*; Boeing, *OV-104, Volume II*; Boeing, *OV-105, Volume II*.

inaugurated at once.[376] Developed by Honeywell Space Systems in Phoenix, Arizona, the MEDS featured nine high-resolution, full-color, flat-panel, liquid crystal display units on the forward instrument panel. Two additional display units were located in the aft cockpit, with one on a side panel and another at the aft payload bay windows.[377] The new screens, which replaced thirty-two gauges and electromechanical displays and four CRT displays, provided easier pilot recognition of key functions. A secondary benefit was a reduction in orbiter weight (75 pounds) and in power consumption (90 watts).[378] Design changes included completely replacing the forward panel structure, modifying cockpit display and switch panels, and replacement of ducting for active cooling.[379] According to Robert Kahl, Boeing's site director (Palmdale) for the shuttle, the MEDS was a "huge" modification which entailed literally gutting the crew module.[380] The first flight of the MEDS "glass cockpit" was the *Atlantis* STS-101 mission, launched in May 2000.

Station to Shuttle Power Transfer System: The SSPTS allowed a docked shuttle to make use of power generated by the ISS's solar arrays. This reduced usage of the orbiter's onboard fuel cells, allowing the spacecraft to stay docked to the station for an additional four days (without an EDO pallet). The SSPTS was installed on OV-103 and OV-105 only. It permitted increased time for ISS assembly and maintenance, science experiments, crew handover time, and for orbiter TPS or other contingency repair.[381]

3-String Global Positioning System: Starting in 2000, the TACAN ground stations were scheduled for gradual phase-out in favor of GPS navigation. As a result, GPS systems were installed in the orbiters. Single-string GPS systems were initially installed to gain confidence. The 3-string system was installed only on OV-105. The upgrade was cancelled for OV-103 and OV-104, leaving them with single-string GPS systems and the TACAN units which worked with ground units that remained in service.[382]

Fuel Cell Performance Monitoring: After an in-flight anomaly, which resulted in a minimum duration flight, the fuel cell single-cell measurement system was developed to enhance the ability to fully assess the fuel cell performance. The fuel cell measurement system was used to provide additional fuel cell health data.[383]

FRCS Rain Cover Redesign: The FRCS rain covers were redesigned to change the material from a type of paper to Tyvek, and to add a pocket to catch the air. This was to prevent the

---

[376] Jenkins, *Space Shuttle*, 373-374.
[377] Craig Covault, "MEDS Glass Cockpit To Enhance Shuttle Safety," *Aviation Week & Space Technology*, March 6, 2000, 54.
[378] Covault, "MEDS," 54.
[379] Boeing, *OV-104, Volume II*, 66.
[380] Kahl, interview, 6.
[381] Boeing, *OV-103, Volume II*, 80.
[382] Boeing, *OV-105, Volume II*, 87.
[383] Boeing, *OV-104, Volume II*, 70.

release of the covers at high velocities during ascent, which impacted windows and thermal seals, resulting in some damage/breach of the TPS.[384]

Forward Attach/ET Fitting Stud Redesign: Following flight STS-102, a crack was detected in the forward ET attach point fitting stud. The square shaft of the stud was redesigned to provide a larger bearing surface area to facilitate rotation.[385]

Orbiter ET Umbilical Door Latch and Drive Actuators: Two aft umbilical openings were located on the underside of the orbiter, through which electrical and propellant umbilical connections entered the orbiter from the ET. Two doors associated with the umbilical openings were in the open position during ground operations and through powered flight. They were then closed after ET separation to protect the umbilical cavities during entry and landing. Redesign to the door drive and latch torque limiters was required.[386]

Tire Pressure Monitoring Improvement: Monitoring capability was added to the nose and main landing gear assemblies to provide the crew with the ability to view in-flight tire pressure, and to quickly determine tire leak rate and temperature. Pressure and temperature measurement transducers were added to all the wheels.[387]

ET Door Drive "C" Link Bolts: The ET door bolts were replaced with those fabricated of a harder material. This upgrade was the result of bolt failure during turnaround processing prior to the launch on OV-103.[388]

Payload Bay Door Expansion Joint Dog-Bone Redesign: Dog-bone seal assemblies were located at each payload bay door expansion joint. They provided environmental sealing, grounding between door segments, and thermal barrier protection. The assembly tended to bind on either side of the joint seal cavities, which could have potentially caused structural damage. The redesign entailed the installation of extended angle brackets, eliminating the need for the existing retainer clips.[389]

Main Propulsion System 17-inch Disconnect: The 17" LO2 and LH2 umbilical disconnects located at the lower left and right aft fuselage provided the propellant feed interface from the ET to the orbiter main propulsion system and the three SSMEs. The disconnects also provided the capability for ET fill and drain of oxygen and hydrogen. Design changes included the latch system, two-piece follower-arm torsion bar bearing, and new linkage and seals in the valve actuator.[390]

---

[384] Boeing, *OV-104, Volume II*, 81.
[385] Boeing, *OV-104, Volume II*, 76.
[386] Boeing, *OV-104, Volume II*, 54.
[387] Boeing, *OV-104, Volume II*, 55.
[388] Boeing, *OV-104, Volume II*, 56.
[389] Boeing, *OV-104, Volume II*, 57.
[390] Boeing, *OV-104, Volume II*, 58.

Radiator Shield and Isolation Modification: Eight radiator panels containing coolant loops with Freon were located inside the payload bay doors. These panels were vulnerable to strikes by micro-meteroid and orbital debris while on-orbit. This modification bonded 0.020" thick doublers to the panel face-sheet directly over the Freon tubes to provide additional impact protection.[391]

Monoball Production Break: Harnesses routed to the LH2 and LO2 electrical monoball established connections between the orbiter and the ET. These harnesses, located in a high traffic area in the aft fuselage, were vulnerable to damage during ground processing. Modification added a monoball wiring production break and removable harnesses, thus simplifying any subsequent repairs.[392]

Orbiter Wiring Connector-Saver Redesign: Connector-savers in four areas (monoball, T-0 Interface, OMS pod interface, and Ku-band assemblies) were redesigned to protect the receptacles from excessive wear during orbiter processing.[393]

ET Aft Attach Material Change: The ET/Orbiter aft attach interface shell material was changed from 6061-T651 aluminum plate to higher strength 7050-T7451 aluminum plate to eliminate potential local material damage. This reduced the potential for compression damage to the aft shell that could result in increased bending moments to the aft attach bolts during ascent.[394]

UHF Space Communication System: On-orbit ultra-high frequencies (UHF) were originally shared with the DoD. Later, because the DoD needed exclusive rights to those frequencies, new frequencies were obtained with new hardware that was compatible with ISS operations. Two new UHF communication systems were installed on the orbiter. One provided two-way communication with the ground, and the other provided communication with the orbiter and ISS during EVAs.[395]

Orbiter/ET Separation Debris Containment: During STS-41, the "hole-plugger" in one of OV-103's orbiter/ET aft attach fitting failed to seat properly. As a result, debris from the frangible nut escaped the container. More positive closure of the container was achieved by changing to a blade valve configuration.[396]

---

[391] Boeing, *OV-104, Volume II*, 69.
[392] Boeing, *OV-104, Volume II*, 72.
[393] Boeing, *OV-104, Volume II*, 77.
[394] Boeing, *OV-104, Volume II*, 78.
[395] Boeing, *OV-104, Volume II*, 79.
[396] Boeing, *OV-104, Volume II*, 80.

APU Heating Modification: On-orbit, the APU fuel line temperatures had to be controlled to prevent freezing, rupture, or detonation. New thermostatically-controlled heaters, activated by switches, were added.[397]

X_O = 1040 and X_O = 1090 Mid Fuselage/Boron Aluminum Strut Replacement: A new design replaced four boron-aluminum struts with thicker walled aluminum struts at the X_O = 1040 and X_O = 1090 frames to increase the margin at these locations.[398]

Rudder Speed Brake Inconel Thermal Barrier Redesign: The rudder speed brake on the trailing edge of the vertical stabilizer contained sixty thermal spring clips which provided thermal protection from SRB/SSME plume heating during ascent. The Inconel thermal barrier taps which bridged the gap between the spring clip seals were redesigned to improve strength and durability.[399]

Emergency Egress Slide Deployment Mechanism Improvement: During crew training exercises, at times, the emergency egress slide deployment mechanism lanyard assembly released prematurely, resulting in the failure of the slide to inflate. The lanyard was shortened from 36" to 26" to eliminate the problem.[400]

Orbiter Floor Reinforcement for 20-g Seat Loads: Structural modification to the flight deck floor (commander and pilot seat locations) and middeck floor (mission specialist seat 5) was required to achieve 20-gravity (g) crash load structural capability.[401]

Discovery (OV-103) Major Modifications

NASA initially planned to modify orbiters during normal processing at KSC, but as the shuttle fleet aged, more time was necessary to adequately inspect, test, repair, upgrade, improve, and modify equipment. Most of the major modifications were executed during three OMDPs, as well as two major modification periods in the aftermath of the *Challenger* (RFT-1) and *Columbia* (RTF-2) accidents. More than 1600 modification records were completed. *Discovery's* OMDP-1 was performed at KSC post-STS-42 after fourteen flights; she flew seven more missions before OMDP-2 was performed at Palmdale following STS-70. The third OMDP, at KSC, followed completion of STS-105, the ninth mission since the previous down period. *Discovery* underwent thousands of changes during her down periods.[402]

---

[397] Boeing, *OV-104, Volume II*, 82.
[398] Boeing, *OV-104, Volume II*, 83.
[399] Boeing, *OV-104, Volume II*, 84.
[400] Boeing, *OV-104, Volume II*, 85.
[401] Boeing, *OV-104, Volume II*, 86.
[402] Boeing, *OV-103, Volume II*, 52.

According to Bill Roberts, the biggest challenge to the upgrade of OV-103 was working within existing limitations, particularly in regard to the capabilities of the old general purpose computers (GPCs) and the processors.

> *"As the vehicle got older, the program realized that we were limited. Sure, there's fast processing of data, but we couldn't do that because you couldn't gut the vehicle to the point where you changed out your GPCs. One of the mods did improve the GPCs, but it was a small improvement compared to what the capability of computers are today."*[403]

RTF-1

In January 1986, *Discovery* was in the VAB at KSC awaiting transport to Vandenberg AFB. However, that plan changed in the aftermath of the *Challenger* accident. Selected as the Return to Flight orbiter, *Discovery* was moved on October 30, 1986, from the VAB to OPF-1. NASA workers removed many of the major components and returned them to their manufacturers for refurbishment.[404] Subsequently, *Discovery* was powered down in February 1987. More than 200 modifications were made over the next six months. "Because 103 was the return to flight vehicle after the *Challenger* accident, all the best resources were put into that vehicle during that turnaround."[405] The majority of the post-*Challenger* modifications and upgrades were directed at eliminating as much risk as possible in the operating systems. Thus, Criticality 1 hardware was identified, and either modified or eliminated from the vehicle.[406] For example, check valves were eliminated, as well as plumbing items in the OMS/RCS area. At the component level, improvements either eliminated the Criticality 1 for that system or improved it.[407] Other upgrades included the installation of a crew escape system and reconfiguration of the landing system.

OMDP-1

In early 1992, *Discovery* was due for her first scheduled down period after completing her eighth flight since RTF-1 (STS-26) in 1988. OMDP-1 was performed at KSC between February 17 and August 17, 1992.[408] Seventy-eight modifications were completed, most notably the replacement of beryllium brakes with a carbon brake system, the addition of nose wheel steering, and the installation of a drag chute. Corrosion was repaired, the structural system was examined, and the TPS was improved.

---

[403] Roberts, interview, 27.
[404] Jenkins, *Space Shuttle*, 291-292.
[405] Roberts, interview, 8.
[406] Criticality 1 hardware is defined as those hardware components that if they were to fail, would cause the loss of life or vehicle.
[407] Roberts, interview, 13-15.
[408] Boeing, *OV-103, Volume II*, 52.

OMDP-2

On September 27, 1995, three years after her last OMDP, *Discovery* left KSC for Palmdale. Over the next nine months, between September 29, 1995 and June 24, 1996, *Discovery* underwent ninety-six modifications and eighty-seven deferred maintenance items. "Basically it was the first time an orbiter was torn apart to the level it was since it was built," Bill Roberts related.[409] According to Roberts, the goal of OMDP-2 was to lighten the vehicle and gain performance in preparation for the flights to the ISS. This period "had more significant modifications and upgrades to an orbiter than ever before," and OV-103 was "the first vehicle to get all of those upgrades."[410] Improvements to the TPS included the replacement of tiles to make the system lighter, stronger, and more durable. AFRSI blankets were replaced with FRSI. A RCC panel between the nose cap and the nose wheel well door was added to provide improved insulation against the heat of reentry. The aluminum foil tape on the wheel wells was replaced with aluminized Kapton tape, and the Inconel and titanium flipper doors were changed to aluminum. Additionally, the whole crew module was rewired for the modular auxiliary data system.[411]

Other major modifications included the addition of a fifth cryogenic tank, the replacement of the internal airlock with an external airlock to support missions to the ISS, and the first installation of the permanent ODS for docking to the ISS. Improvements to the orbiter propellant supply system included a redesigned 17" disconnect valve. Also, a new crew escape system was added.

OMDP-3/RTF-2

OMDP-3 began on September 1, 2002, at KSC, nine flights and six years after OMDP-2; work was completed on April 1, 2004.[412] *Discovery*, the first orbiter to undergo an OMM at KSC, received ninety-nine scheduled upgrades and underwent eighty-eight special tests, including new RTF changes.[413] Safety modifications also were performed. Nearly all accessible parts were removed from the vehicle, exposing the orbiter's airframe, which was inspected for corrosion, and wear and tear. Examination included nearly 150 miles of wiring. Anticorrosive compound and paint were applied after the airframe was stripped. More than 1,400 of the 24,000 tiles were replaced. Many modifications were made to address the recommendations of the CAIB. Among the changes was the addition of new sensors in the leading edge of the wings, a new safety measure that monitored the orbiter's wings for debris impacts. Also, twenty-two temperature sensors and sixty-six accelerometers were added. The OBSS was added, and the orbiter was equipped with cameras and laser systems to inspect *Discovery's* TPS while in space. The front spar on the wings was retooled to counter sneak flow, and gap fillers were used to impede hot gas intrusion. The MEDS glass cockpit was installed, which improved graphic capabilities,

[409] Roberts, interview, 8.
[410] Roberts, interview, 33, 34.
[411] Roberts, interview, 29.
[412] Boeing, *OV-103, Volume II*, 52.
[413] Anna Heiney, "My Shuttle's in the Shop," February 23, 2004, http://www.nasa.gov/missions/shuttle/f_omdp1.html.

reduced shuttle weight, and eased instrumentation use. Redesigned ET electrical and fuel umbilical doors were installed, as were redesigned payload door joint seals. The heat rejection panels on the radiator doors were insulated. Removable harnesses were introduced on the electrical connections that linked the ET and orbiter, and new FRCS rain covers were added.[414]

Other Modifications

Changes to *Discovery* were not limited to her OMDPs and RTF down periods. Hundreds of changes, large and small, were made during between-flight processing.

Discovery was one of two orbiters modified at KSC so that the Centaur upper stage could fit into the payload.[415] The rocket was built to deploy satellites while the shuttle was in orbit. The $5 million alterations to OV-103 included the addition of controls on the aft flight deck for loading and monitoring Centaur, and extra plumbing to load and vent the rocket's cryogenic propellants. However, no space shuttles carried the Centaur into space, and the idea of flying with a rocket full of liquid fuel in an orbiter's payload bay was deemed too risky after the *Challenger* accident on January 28, 1986.[416]

Between the *Challenger* and *Columbia* accidents, there were four major between-flight alterations to *Discovery*. The brakes were changed from the original beryllium to carbon after STS-33 in November 1989, and a single-string GPS was installed on the shuttle after STS-56 in April 1993.[417] The weakened ET door bolts were replaced after STS-82 in February 1997. Following STS-85 in August 1997, the fuel cell measurement system was implemented to provide better data, and stronger struts were added to the midfuselage.

Following the *Columbia* accident in 2003, there were four more major between-flight alterations to *Discovery*. Larger, stronger tires were added and the ET attachment was reconfigured after STS-114 ended in August 2005. The SSPTS was implemented in December 2006. After STS-119 in March 2009, the APU was converted so it could be controlled by a thermostat. After STS-128 in September 2009, the rudder speed brake was improved.[418]

---

[414] Boeing, *OV-103, Volume II*, 54-92.
[415] *Challenger* was the other modified orbiter. *Atlantis* was originally built with a Centaur capability. Jenkins, *Space Shuttle*, 246.
[416] Jenkins, *Space Shuttle*, 246; NASA KSC, "Discovery (OV-103)."
[417] Gebhardt, "After 26 Years."
[418] Boeing, *OV-103, Volume II*, 54-92.

IIC. Physical Description[419]

Discovery was a double-delta winged reentry vehicle[420] that had the ability to carry both passengers and cargo into low-Earth orbit. It had approximate overall dimensions of 122'-2" in length (from nose to tail), 78' in width (from wing tip to wing tip), and 56'-8" in height, to the top of the vertical tail when the landing gear was deployed (Figure No. B-61). The height of the orbiter with the landing gear stowed was roughly 46'-4.5". It was primarily constructed of aluminum alloys, and covered with a reusable TPS. The original specifications for the vehicle required that the orbiter be capable of 100 flights; *Discovery* flew a total of thirty-nine missions.

The orbiter had its own coordinate reference system, which was separate from that for the entire Space Shuttle vehicle (Figure No. B-62). This reference system, similar to those used by most aircraft manufacturers, allowed engineers, technicians, and astronauts to locate specific points on and within the orbiter. The x-axis of this system extended along the length of the orbiter; the y-axis traveled through the width of the orbiter, and the z-axis extended through the height of the orbiter. The origin point of the orbiter's coordinate system was situated 236" forward of the tip of the nose (x-axis), along the centerline of the vehicle (y-axis), approximately 207" below the lowest point of the orbiter's belly, excluding the landing gear, when the payload bay doors were in the true horizontal position.[421]

Structurally, *Discovery* was divided into nine major sections (Figure No. B-63). These included the forward fuselage, which was comprised of the upper forward fuselage, the lower forward fuselage, and the crew module; the FRCS module; the midfuselage; the payload bay doors (two total); the wings (two total); the aft fuselage; the OMS/RCS module (two total); the vertical stabilizer; and the body flap.

Major Structural Sections

Forward Fuselage

The **forward fuselage** (Figure No. B-64) was comprised of a lower forward fuselage and an upper forward fuselage, which joined together to encase the crew module. All three components were manufactured by Rockwell International at their plant in Downey, California.[422] As a whole, the forward fuselage had a length of approximately 28.83', a width of 17' at its widest

---

[419] This description focuses on *Discovery*, since she is the "shuttle of record." Any differences in *Atlantis* and *Endeavour* are noted throughout as appropriate.
[420] A delta wing is a wing that takes the form of a triangle; it derives its name from its similarity to the written form of the upper-case Greek letter Delta (Δ). The "double-delta" indicates that the angle formed by the leading edge of the wing, or its sweepback, changes.
[421] For this description, the length of a component will always refer to its x-axis dimension; the width to its y-axis dimension; and height to its z-axis dimension.
[422] Jenkins, *Space Shuttle*, 367.

point (where it connected to the midfuselage), and a maximum height of 13', excluding the nose landing gear.

The upper and lower forward fuselage segments were constructed of conventional 2024 aluminum alloy.[423] Their internal structural skeleton was formed by a series of frames, spaced 30" to 36" on center; the frames in each segment aligned with their counterparts in the other segment. Riveted to these frames were the skin-stringer panels, which were comprised of single curvature, stretch-formed skins braced by riveted stringers, spaced 3" to 5" on center.[424] There were two main bulkheads within the forward fuselage, one at the X_O = 378 mark and one at the X_O = 582 mark. The X_O = 582 bulkhead was manufactured of a machined upper frame and a built-up lower frame. It served as the attachment point between the forward fuselage and the midfuselage; the two components were separated by a flexible membrane. The X_O = 378 bulkhead contained an upper and a lower half. The upper portion was constructed of flat aluminum and formed sections, which were riveted and bolted together; this portion of the bulkhead was the forward end of the upper forward fuselage. The lower section, made of machined aluminum, was built into the lower forward fuselage and provided the interface fitting for the nose section. The nose section was constructed of aluminum machined sidewalls and fitted with machined beams and struts. Two truss supports connected it to the top of the upper half of the X_O = 378 bulkhead; two trunnion supports fastened it to the lower half of the X_O = 378 bulkhead.[425]

The forward fuselage was designed to carry the basic body-bending loads of the vehicle, and to provide a reaction to the nose landing gear loads.[426] Additionally, through the nose section, the forward fuselage supported the nose cap, the nose landing gear wheel well and doors, the nose landing gear, and the FRCS module.[427] The roughly 64"-diameter nose cap was formed by a single piece of RCC, and was attached to an interface on the lower forward fuselage. Thermal barriers protected the seal. Centered within the underside of the lower forward fuselage was the 8'-long, 3'-5"-wide wheel well; its aft end abutted the X_O = 378 bulkhead. The well consisted of two support beams, two upper closeout webs, drag-link support struts, a nose landing gear strut, actuator attachment fittings, and the nose landing gear door fittings. The two doors, which were made of aluminum alloy honeycomb, were attached to the nose section with hinges. Both doors were the same length, but the left was wider than the right, to provide an overlap when closed.

---

[423] "2084 Aluminum Alloy" is a type of aluminum alloy that uses copper and magnesium as the alloying elements. It has a high strength to weight ratio, and good fatigue resistance, which makes it ideal for use in aircraft construction.
[424] Riveted skin-and-stringer aluminum is sheet aluminum that is reinforced with aluminum ribs (stringers) that are riveted to the skin panels. The ribs are extruded, machined, or formed from sheet stock.
[425] United Space Alliance (USA), *Shuttle Crew Operations Manual* (Houston: United Space Alliance, 2004), 1.2-1; Boeing, *OV-103, Volume I*, 83-84.
[426] A body-bending load was a load that tended to change the radius of a curvature of the body.
[427] The nose gear is described further in the Deceleration and Landing Systems section (beginning on page 192); the FRCS module is described further later in this section (beginning on page 129).

Each door was also fitted with a pressure seal and a thermal barrier, and had an up-latch fitting at the forward and aft ends, which locked the door closed when the landing gear was retracted.[428]

The skin panels of the forward fuselage (Figure Nos. B-65 through B-68) were fitted with structural provisions that supported various pieces of flight equipment. For example, there were two air data sensors near the nose cone, one on each side of the vehicle, just below the FRCS module. Additionally, the top surface of the vehicle contained ten communications antennas. Just to the aft of the nose cone was a line of three Ku-band and microwave scanning beam landing system (MSBLS) antennas. Three TACAN antennas, placed in a triangular arrangement, were located between the FRCS module and the forward flight deck windows. Behind the forward flight deck windows, along the centerline of the vehicle, was one S-band, frequency modulation (FM) antenna, and centered between the overhead observation windows was one S-band payload antenna. In addition, one S-band phase modulation (PM) antenna was located to either side of the overhead windows. [429]

The bottom surface of the orbiter's forward fuselage (Figure No. B-68) was fitted with three TACAN antennas, one along the centerline of the vehicle, one near the starboard side, and one near the port side. One UHF antenna, fitted with an access door, was also situated along the centerline of the orbiter; directly behind it was one S-band FM antenna. Two S-band PM antennas were also located on the bottom surface of the forward fuselage. In addition, there were two radio alternate transmitters, and two radio alternate receivers, which formed a box around the UHF antenna. One last feature of the bottom surface of the forward fuselage was the forward orbiter/ET attach fitting, which was located at the Xo = 378 bulkhead, on the skin panel aft of the nose gear wheel well.[430]

In addition to structural provisions for flight equipment, the forward fuselage contained various external access panels to equipment or to different internal systems for flight processing activities. On the top surface (Figure No. B-65), there were two adjacent star tracker doors on the port side of the vehicle. The starboard side of the forward fuselage (Figure No. B-67) contained two vent doors just to the aft of the FRCS module. In addition, there was an access panel for the ground emergency egress window jettison T-handle. The port side of the forward fuselage (Figure No. B-66) had two vent doors, in the mirror location of those on the starboard side, as well as a water service panel and an opening for the main crew hatch.[431]

Discovery's **crew module** (Figure No. B-64) had approximate overall dimensions of 16.5' in length and 17.5' in height; it had a rough volume of 2,533 cubic feet. The module was constructed of 2219 aluminum alloy plate with integral stiffening stringers and internal framing,

---

[428] USA, *Crew Operations*, 1.2-1, 1.2-2; Boeing, *OV-103, Volume I*, 84; Jenkins, *Space Shuttle*, 408.
[429] The antennas are discussed in more detail in the communications systems section, beginning on page 157.
[430] This fitting also served as the forward attachment point for the SCA.
[431] The crew hatch is described in more detail on page 126.

all of which were welded together to create a pressure-tight vessel.[432] Gold-coated, multilayer insulation blankets were attached to the outside surfaces.[433] There were roughly 300 penetrations within the module, all of which were sealed with plates and fittings.[434] Ten of these penetrations were the windows within the flight deck level. There were six windows at the forward end, surrounding the commander and pilot stations, two in the aft bulkhead, and two in the top surface of the vehicle.[435]

The crew module was connected to the forward fuselage at only four attachment points to limit thermal conductivity between the two components. The two main attachment points were situated at the aft end of the flight deck floor level. The third attachment point, which handled all vertical load reactions, was located on the centerline of the X_O = 378 bulkhead. The fourth attachment point, used to handle all lateral load reactions, was situated on the lower segment of the X_O = 582 bulkhead.[436]

The crew module contained three internal levels (Figure No. B-70): the flight deck at the top, the middeck in between, and the equipment bay at the bottom. Over these three levels, the crew module supported the vehicle's ECLSS, avionics equipment, guidance, navigation and control (GNC) equipment, inertial measurement units, displays and controls, star trackers, and crew accommodations for sleeping, waste management, seating, and eating. The module was accessed via the crew hatch, located on the port side of the orbiter, which was the only means of entry into and out of the orbiter (except in the case of emergency situations).[437] Two access openings in the flight deck floor, one on each side of the orbiter, allowed travel between the middeck and flight deck; both had approximate dimensions of 26" x 28".[438] A ladder was attached to the left opening for access between the levels at Earth atmospheric conditions. No provisions were available to allow the crew, or ground personnel, physical access into the equipment bay.

Flight Deck

The flight deck served as the location for flight controls and crew stations for launch, on-orbit operations, and landing (Figure Nos. B-71 through B-74). It was functionally divided into two areas: the forward flight deck and the aft flight deck. The forward flight deck generally included the commander and pilot stations; the aft flight deck consisted of the mission control station

---

[432] "2219 Aluminum Alloy" is a type of aluminum alloy that uses copper and nickel as the alloying elements. It has excellent resistance to corrosion, and has highly efficient thermal and electrical properties, making it an ideal use in extreme temperatures.
[433] *Enterprise* and *Columbia* had these blankets attached to the interior frames and skin of the forward fuselage; *Challenger*, *Atlantis*, and *Endeavour*, like OV-103, had them attached directly to the outside of the crew compartment. Jenkins, *Space Shuttle*, 367.
[434] During assembly procedures, there was a large removable panel in the aft bulkhead to provide access to the crew compartment. Boeing, *OV-103, Volume I*, 85.
[435] USA, *Crew Operations*, 1.2-3; Boeing, *OV-103, Volume I*, 85.
[436] USA, *Crew Operations*, 1.2-3, 1.2-4; Boeing, *OV-103, Volume I*, 86.
[437] A description of the crew escape systems begins on page 208.
[438] Typically, the right opening was closed and the left was open. USA, *Crew Operations*, 1.2-5.

(behind the pilot's seat), the payload control station (behind the commander's seat), and the on-orbit control station, mounted to the aft bulkhead. During launch and landing operations, the flight deck typically held four crewmembers, the commander in the front port seat and the pilot in the front starboard seat, with two mission specialists behind them.[439] The commander and pilot seats, which were used for all on-orbit propulsion activities, were left in place during the entire mission. The rear mission specialist seats, on the other hand, were typically removed and stowed while the vehicle was in orbit.[440]

All crew seats had approximate dimensions of 25.5" high, 15.5" wide, and 11" deep, and were primarily made of 7075 aluminum alloy.[441] The commander and pilot seats were fitted with two shoulder harnesses and a lap belt for restraint, and were capable of moving up to 5" backward and 10" upward, with the aid of a single electric motor; this assisted the commander and pilot in seeing and reaching controls during ascent and reentry. These seats also had stowage compartments for in-flight equipment, removable seat cushions, and provisions for oxygen and communications connections to the crew altitude protection system.[442] The mission specialist seats were also fitted with two shoulder harnesses and a lap belt. These seats could not move forward/backward or upward/downward, but they could be tilted a maximum of 10 degrees. Like the commander and pilot seats, these were also fitted with removable cushions and oxygen/communications connections; however, they did not contain any stowage compartments.[443]

Throughout the forward and aft flight deck areas, there were approximately 2,100 displays and controls. These displays and controls were divided among various panels, each of which had its own alphanumeric designation based on its location on the flight deck (Figure Nos. B-75, B-76). The designations for those panels on the forward wall of the flight deck began with an "F," while the labels for the panels on the aft wall began with an "A." The numeric designation for both forward and aft panels followed a sequential pattern that started at the top left corner (as facing the wall) and reading across in rows. A similar numbering pattern was used for the overhead

---

[439] USA, *Crew Operations*, 1.2-4.
[440] Jenkins, *Space Shuttle*, 369.
[441] "7075 Aluminum Alloy," is a type of aluminum alloy, which uses zinc as the primary alloying element. It has a strength comparable to many forms of steel and good fatigue strength; however, it has less resistance to corrosion than other aluminum alloys. This seat design was initiated in 1995, in preparation for ISS operations. The original seats were much heavier, and could not withstand the same loads as the new seats. At the same time, new floor fittings were designed to reduce loading at the attach points, a factor critical in relation to floor warping. The floor warping requirement was actually developed by the Federal Aviation Administration in response to common attach point failures that had been seen in commercial airline accidents. All of the seats were installed in the different orbiters as they went through their OMDP cycles. During the ALT and Orbital Flight Test (OFT) flights, the orbiter was fitted with only two seats, the commander and pilot seats, both of which were zero-zero ejection seats (seats designed to eject the crew from a grounded stationary position, or a low-altitude, low-velocity emergency). These were disabled after STS-4 and removed following STS-9. Jenkins, *Space Shuttle*, 369-370.
[442] There is also manual control over the movement of the seats, but that is available only during the on-orbit phase of the mission. Jenkins, *Space Shuttle*, 369.
[443] Jenkins, *Space Shuttle*, 369.

panels, which began with an "O," and the center console panels, which began with the letter "C." The panels along the right and left walls, denoted by "R" and "L," respectively, were numbered slightly differently. Those to the front of the bulkhead (i.e., within the forward flight deck) were numbered from top to bottom, forward to aft, whereas those behind the bulkhead (i.e., in the aft flight deck) were numbered from left to right, top to bottom.[444]

The forward flight deck was arranged in a standard pilot/copilot layout (Figure No. B-71), with the commander's seat on the port side of the vehicle and the pilot's seat on the starboard side. Both stations were capable of piloting the vehicle during all phases of flight; those panels that contained the appropriate controls were mirrored on each station. The forward flight deck had an area of approximately 24 square feet, including the center console; the side consoles added 3.5 square feet.[445]

A key feature of the forward flight deck was the MEDS (Figure No. B-77), commonly referred to as the "glass cockpit," which was designed in the early 1990s.[446] The MEDS extended across the three forward control panels, and contained nine identical, color, multifunction display units, four integrated display processors, and four analog-to-digital converters. The display units were similar to the flat panel displays developed for the Boeing 777, except modified to use a liquid crystal display produced in the U.S. The screen was 6.71" in height and width, with an allowable horizontal viewing angle of +/- 60 degrees and an allowable vertical viewing angle of +45/-10 degrees.[447] The integrated display processors performed all of the functions of the original display electronics units and display driver units, except for the operation of the rotational hand controllers. The processors controlled the operation of the MEDS, and provided the interface to the GPCs. The analog-to-digital converters converted roughly thirty-two analog flight instrument signals into digital transmissions that were usable by the MEDS.[448]

The dedicated displays were used to provide the flight crew with the data required to either fly the vehicle manually, or to monitor the automatic flight control system performance. The data were generated by the navigation or flight control system software, or more directly by the navigation sensors. There were eleven multifunction display units that made up the dedicated display system; they included the primary flight displays, the surface position indicator, the RCS activity lights, and the head-up displays. Nine displays were located among the commander and

---

[444] USA, *Crew Operations*, 1.1-8 through 1.1-10.
[445] USA, *Crew Operations*, 1.2-5; Boeing, *OV-103, Volume I*, 87.
[446] The original was referred to as the electro-mechanical cockpit.
[447] The display units replaced the original three cathode ray tube displays, and various dedicated displays, such as the altitude director indicators, the two horizontal situation indicators, and the altitude/vertical velocity indicators (Figure No. B-78). The MEDS was installed in each orbiter during one of its OMDPs. *Atlantis* was the first to receive it, during her 1998 OMDP; *Columbia* received hers during her late-2000 OMDP, *Discovery* got hers during her OMDP-3, and *Endeavour* got hers during her OMDP-2. Boeing, *OV-103, Volume II*, 70; Jenkins, *Space Shuttle*, 374-376.
[448] Jenkins, *Space Shuttle*, 375.

pilot stations, and two were on the aft flight deck panel near the aft-facing windows; all were considered part of the MEDS.[449]

The primary flight display, or the "flight instruments," was located between the commander's and pilot's stations in the forward flight deck. The visuals on the display changed with each phase of the mission to show the appropriate data. As the mission phase changed, data no longer needed were removed from the display, and the area was replaced with pertinent data to the new phase of flight, or left blank.[450] The various screens displayed the attitude director indicator, the horizontal situation indicator, and various flight instrument tapes and meters.

The attitude director indicator (Figure B-79) provided information relative to the vehicle's attitude, as well as attitude rates and errors; it was displayed as a software simulated enclosed ball that gimbaled to represent three degrees of freedom. A digital readout also showed the current pitch, yaw, and roll in degrees.[451] The horizontal situation indicator (Figure B-80) displayed a pictorial view of the vehicle's position with respect to various navigation points. It also showed a visual perspective of certain GNC parameters, such as direction, distance, and course/glide path deviation. It was typically displayed during ascent, abort, and entry.[452] Flight instrument tapes were only shown during ascent and entry, and consisted of several meters or digital displays that showed vehicle parameters, such as angle of attack, Mach/velocity, equivalent air speed, altitude, altitude rate, altitude acceleration, and a g-meter. With the exception of the altitude acceleration, the value of each parameter was read by a digital window centered on the moving tape.[453]

The surface position indicator was also a MEDS display; it was active only during the entry phase of flight (Figure B-81). This indicator displayed the actual position of the orbiter's elevons, body flap, rudder, aileron, and speedbrake, as well as the commanded speedbrake position. There was a separate indicator for each elevon; the indicators were in the order of appearance as viewed from the rear of the vehicle (i.e., left outboard, left inboard, right inboard, right outboard). The scales of each display typically ranged between the software limits for the particular component.[454]

The RCS activity lights were typically displayed on panel F6 in the forward flight deck; they were activated following main engine cut-off. The primary purpose of the lights was to indicate RCS jet commands by axis and direction during transitional and orbit phases. They were also used to indicate when more than two yaw jets were commanded, and when the elevon drive rate

[449] USA, *Crew Operations*, 2.7-1.
[450] USA, *Crew Operations*, 2.7-3.
[451] USA, *Crew Operations*, 2.7-3, 2.7-4.
[452] USA, *Crew Operations*, 2.7-8.
[453] USA, *Crew Operations*, 2.7-3, 2.7-14.
[454] USA, *Crew Operations*, 2.7-17, 2.7-18.

was saturated. There were three lights, one of which controlled vehicle roll (left to right), one controlled yaw (left to right), and one controlled pitch (up and down).[455]

A head-up display was located on the glare-shield in both the commander's and pilot's stations. The display served as an optical miniprocessor that cued the commander and pilot during the final phase of entry, in particular during the final approach to the runway. The display presented the same data that was shown on several other instruments, including the primary flight display and the surface position indicator. It superimposed flight commands and information on a transparent combiner in the window's field of view, requiring only minimal eye movement by the commander and pilot between the orbiter windows (head up) and the dedicated display instruments (head down).[456]

The commander and pilot stations were each also fitted with a rotational hand controller, which could control vehicle rotation along all three axes. These controllers allowed the crew to command different vehicle components depending on the phase of the mission. For ascent, they could gimbal the SSMEs and the SRBs; for orbital insertion and deorbit, they gimballed the OMS engines and commanded thrusting of the RCS engines; while on-orbit, they commanded the RCS thrusters; during reentry, they provided normal flight control-type inputs, commanding either the RCS thrusters or other aerodynamic surfaces as required. Each station was also fitted with a rudder pedal, which controlled the rudder during atmospheric flight, as well as the nose wheel steering system and the main wheel brakes during ground operations. The pedals also had a speedbrake/thrust controller, used to either vary the SSME thrust level during ascent or operate the speedbrake during descent.[457]

The aft flight deck (Figure No. B-74), which had an area of roughly 40 square feet, contained the displays and controls for executing attitude or translational maneuvers associated with rendezvous, stationkeeping, docking, payload deployment and retrieval, payload monitoring, RMS operations, payload bay door operations, and closed-circuit television operations. The aft flight deck was fitted with a rotational hand controller, similar to those in the commander and pilot stations, that was used to control the RMS; it also had a translational controller. In addition, the aft flight deck contained two dedicated displays that were considered part of the MEDS.[458]

In order to aid with piloting the vehicle, as well as on-orbit operations, the flight deck contained ten window sets, all of which were manufactured by the Corning Glass Company in Corning, New York.[459] There were six windows on the forward flight deck, with two above the aft flight deck, and two in the aft bulkhead, which looked out on the payload bay. The windows on the forward deck were surrounded with active cooling system loops to reduce heat loads during

---

[455] USA, *Crew Operations*, 2.7-19, 2.7-20.
[456] USA, *Crew Operations*, 2.7-21.
[457] Jenkins, *Space Shuttle*, 371-372.
[458] USA, *Crew Operations*, 1.2-4, 1.2-5; Boeing, *OV-103, Volume I*, 87.
[459] Jenkins, *Space Shuttle*, 369.

reentry. They were also the thickest pieces of glass ever produced in the optical quality for see-through viewing. The innermost pane was 0.625" thick, and was constructed of tempered aluminosilicate glass that was designed to withstand crew compartment pressure. The exterior face of this pane was coated with a red reflector coating, which reflected infrared rays (heat producing) while still transmitting the visible spectrum. The middle pane was constructed of 1.3"-thick, low-expansion, fused silica glass, and provided a thermal shock layer. The inner and outer surfaces were coated with a high-efficiency, anti-reflection coating to improve visible light transmission. The outer pane was of the same material as the middle pane, but was only 0.625" thick. It provided thermal and impact protection, and its inner surface was coated with the same high-efficiency, anti-reflection coating as the middle pane. The two inner panes measured 35" diagonally and were mounted to the crew cabin; the outer pane measured 42" diagonally and was attached to the forward fuselage. Redundant seals surrounded each window. The forward windows were used by the commander and pilot for entry and landing activities, as well as appropriate on-orbit operations.[460]

The two overhead windows were of the same construction as the forward windows, except for thickness. For these windows, the inner and center panes were 0.45" thick and the outer pane was 0.68" thick; their clear view area was 20" x 20". Like the forward windows, the two inner panes were attached to the crew cabin, while the outer pane was attached to the forward fuselage. The overhead port window was fitted with a pyrotechnic charge release for emergency exit purposes. The rear windows consisted of only two panes of glass, which were identical to the inner and middle panes of the forward windows, except for thickness and size. Each pane was 0.3" thick and measured 14.5" x 11"; both panes were attached to the crew compartment. The rear and overhead windows were used during rendezvous and docking procedures, as well as payload bay activities. All of the windows were provided with shades to control sun glare while the vehicle was in orbit. On the forward windows, these shades were rolled up and stored at the base of the windows. The overhead window shades were stored in the middeck and fitted to attachments on the windows. The rear window shades were held in place with Nomex Velcro around their perimeter.[461]

Middeck

Completely stripped of all equipment, the middeck was approximately 160 square feet in area; during a mission, its gross mobility area was nominally 100 square feet (Figure Nos. B-82, B-83). The middeck provided accommodations for the crew, such as a galley for food preparation, the waste management system (toilet, trash, etc.), and lockers for equipment and astronaut personal effects storage as well as experiment storage, and three avionics bays. During launch and landing procedures, the middeck was fitted with three seats, typically inhabited by mission

[460] USA, *Crew Operations*, 1.2-6, 1.2-7; Jenkins, *Space Shuttle*, 367-368.
[461] USA, *Crew Operations*, 1.2-6; Jenkins, *Space Shuttle*, 368. Nomex is the trademark name for a rigid, heat resistant felt manufactured by DuPont.

specialists; these were stowed during on-orbit operations. If the sleep stations were not present, the middeck could accommodate an additional three seats.[462]

The crew hatch was located at the middeck level on the port side, and had an approximate diameter of 40" (Figure No. B-84). It was attached to the vehicle by hinges, a torque tube, and support fittings; it was also fitted with a pressure seal and an Inconel thermal barrier was situated between it and the TPS mounted to the forward fuselage.[463] The hatch could open to a 90-degree angle, and at its center was a 10" clear-view window that consisted of three panes of glass. The inner pane of glass was 11.4" in diameter and 0.25" thick, while the center pane was 11.4" in diameter and 0.5" thick. The outer pane was 15" in diameter and 0.3" thick. A window cover was permanently attached to the frame via a hinge, which allowed for easy opening and closing. The crew hatch could be operated from the interior or the exterior of the vehicle; following the *Challenger* accident, the hatch was modified to allow it to be explosively jettisoned in emergency situations.[464]

The middeck contained three of the orbiter's six avionics equipment bays.[465] Two of these, Avionics Bay No. 1 (port side) and Avionics Bay No. 2 (starboard side), were located along the forward bulkhead. Together, they extended across the entire width of the cabin; each was 39" in length and stood the full height of the middeck. The third bay, Avionics Bay No. 3A, was located on the starboard side of the aft bulkhead. It also had a length of 39" and stood the full height of the middeck; its width was roughly 46".[466] This avionics bay also had a built-in storage compartment, referred to as Volume 3B. This compartment typically held a cabin air cleaner and emergency breathing masks.[467]

The middeck had a stowage capacity of roughly 140 cubic feet. Crew, equipment, and experiment storage was provided by forty-four identical modular stowage lockers, each of which measured 11" x 18" x 21". The modular lockers were comprised of Kevlar-epoxy sandwich panels with a non-metallic core (Figure No. B-85).[468] The majority of the lockers were located along the forward wall of the middeck; typically, there were between six and eight rows of lockers, stacked in five columns. Modular stowage lockers were also installed on the forward side of the aft avionics bay. Usually, these were arranged in two columns with five or six rows.

---

[462] USA, *Crew Operations*, 1.2-5; Boeing, *OV-103, Volume I*, 87-88. The seats were the same as the mission specialist seats used on the flight deck.
[463] Inconel is a registered trademark of Special Metals Corporation. It is a family of metallic, non-magnetic, nickel-chromium based superalloys that are oxidation and corrosion resistant, making them ideal for high temperature applications.
[464] USA, *Crew Operations*, 1.2-5; Boeing, *OV-103, Volume I*, 88.
[465] The space shuttle avionics system controlled, or assisted in controlling, most of the shuttle systems. The avionics system consisted of more than 300 major electronic black boxes located throughout the vehicle, and was designed to withstand multiple failures through redundant hardware and software.
[466] USA, *Crew Operations*, 1.2-5; Jenkins, *Space Shuttle*, 378.
[467] USA, *Crew Operations*, 2.24-4.
[468] Originally, the lockers were comprised of aluminum; the change in material provided a weight reduction of roughly 200 pounds in preparation for ISS activities. Jenkins, *Space Shuttle*, 378.

The lockers were interchangeable, and attached to the orbiter with spring-loaded captive bolts. They could be removed and installed during flight by the crewmembers. The modular lockers were fitted with insertable trays, which could be adapted to accommodate a wide variety of soft goods, loose equipment, and food.[469]

Aside from the modular stowage lockers, the forward wall of the middeck could be fitted with a work or dining table.[470] The aft wall of the middeck contained the opening for the airlock's access hatch. The access hatch opening was roughly situated along the centerline of the orbiter's y-axis; its center was approximately 24" above the middeck floor. To the upper port side of this opening was a control panel. On the port side of the aft middeck wall was the vehicle's waste management compartment, which included the toilet, as well as towel storage.

The starboard wall of the middeck had various attach points for crew sleeping bags (Figure No. B-86). In addition, this wall could be fitted with a four-tier bunk bed assembly for the astronauts to sleep in (see Figure No. B-82).[471] There was also a storage compartment, Volume B, along the starboard wall; it was typically used for dry trash, towels, or dirty laundry.[472] The port wall of the middeck contained the galley, the middeck accommodation rack, the crew hatch, and a few control panels. When installed, the galley/food system (Figure No. B-87) was situated near the forward end of the port wall. The galley was a multipurpose facility that provided a centralized location for handling all food preparation activities, stowage, and dining. It contained an oven, a rehydration station, hot and cold water, associated controls, and storage for utensils, condiments and other implements. The oven consisted of two principle compartments. The upper compartment was designed to heat up to fourteen rehydratable food containers inserted on tracks; the lower compartment could accommodate up to seven flexible packages. The rehydration station dispensing system interfaced directly with food and beverage packages to provide rehydration capability and drinking water for crewmembers.[473]

The galley was fitted with various switches and levers for different operations, such as dispensing hot water, selecting the amount of water, an oven/rehydration station on/off switch, two water heater on/off switches, and an oven fan switch. An auxiliary port water quick disconnect was also provided for dispensing water through a 12' flex line.[474] Next to the galley was a pantry, also referred to as Volume A, for the storage of snack food, beverages, condiments, and utensils. Only one set of utensils, which included a knife, a fork, a tablespoon, and a small pair of scissors, was provided for each crewmember for the entire flight.[475]

---

[469] USA, *Crew Operations*, 2.24-1, 2.24-2.
[470] USA, *Crew Operations*, 2.24-2.
[471] See the discussion on crew systems, beginning on page 212.
[472] USA, *Crew Operations*, 2.24-2.
[473] USA, *Crew Operations*, 2.12-1.
[474] USA, *Crew Operations*, 2.12-2.
[475] USA, *Crew Operations*, 2.12-3.

The provided food supply was categorized as either menu food, pantry food, or fresh food; meals were individually tailored based on crewmember preference. Menu foods were the three typical daily meals (breakfast, lunch, dinner); pantry food was a two-day contingency food supply that also contained snacks and beverages; and fresh foods were perishable items such as fruits, vegetables and tortillas. In addition, reentry kits were provided for each crewmember, which contained either empty drink bags and salt tablets, chicken consommé packets, or Astroade packets. These were to provide the necessary water and salt for each crewmember for readjustment to 1-g atmospheric conditions.[476] The middeck accommodation rack (Figure No. B-88), which typically consisted of four compartments, was located to the aft of the galley. The middeck accommodation rack provided storage for small payloads and experiments in the middeck of the orbiter. It was installed just forward of the crew hatch in the aft area of the galley. If the middeck accommodation rack was not required, a lightweight version of the rack was installed, which could hold a maximum load of 390 pounds. It contained the same volumetric space as the standard rack.[477]

The ceiling of the middeck was fitted with various panels, light fixtures, and openings. Five compartments were located in the middeck floor for storage: they were labeled Volumes D, E, F, G, and H. Volume D was a floor compartment that was partially blocked by the forward lockers; it was used to store EVA tools, gravity suits, and miscellaneous items. Volume E was located next to Volume D and was used for official flight kits and personal preference kits; access to the compartment required the removal of two lockers. Volume F was the wet trash compartment, and was located in the floor near the starboard wall. Volume G was immediately to the aft of Volume F and contained contingency hygiene equipment and a spare odor bacteria filter; two lockers had to be removed for access to the compartment. Volume H, located at the base of the interdeck ladder on the port side of the middeck, was used to store EVA accessories.[478]

Equipment Bay

Aside from the compartments listed above, the *Discovery's* equipment bay (Figure No. B-89) contained components for various systems, such as fans for the avionics bays, water tanks (potable and wastewater), water pumps, air supply and return ducts, and heat exchangers.[479]

Forward Reaction Control System Module

The **FRCS module** (Figure No. B-90) was manufactured by Rockwell's Space Transportation System Division, located in Downey, California.[480] The module had rough overall dimensions of 84" in length, with a width of 72" and height of 28" at its forward end, and a width of 132" and

[476] USA, *Crew Operations*, 2.12-3, 2.12-4.
[477] USA, *Crew Operations*, 2.24-6.
[478] USA, *Crew Operations*, 2.24-2 through 2.24-4.
[479] Jenkins, *Space Shuttle*, 367.
[480] Jenkins, *Space Shuttle*, 367.

height of 64" at its aft end. While the top surface was rounded to correspond with the forward fuselage, the bottom surface was shaped to fit around the nose landing gear wheel well. Similar to the forward fuselage, it had conventional 2024 aluminum alloy, single-curvature, stretched form skin-stringer panels, which were riveted to a series of frames made of the same material. It was secured to the orbiter behind the nose cap (roughly at X_O = 294) and at the X_O = 378 bulkhead of the forward fuselage, with sixteen fasteners. This allowed the module to be removed for servicing, as required.[481]

The function of the module was to house the components associated with the FRCS.[482] This included fourteen primary engines, three near the forward end of the top surface, three at the aft end of the top surface, and four in the aft portion of each side surface, and two vernier engines, one near the center of each side. All of the engines were fitted with thermal barriers for protection. Attached to the inside of the module were the fuel (monomethylhydrazine [MMH]) and oxidizer (nitrogen tetroxide [N_2O_4]) tanks, on the left and right sides, respectively; two helium tanks, one per side; four heater panels; a fuel manifold; fluid piping; and several valves.[483]

Ground servicing access to the FRCS was provided by various panels around the module (see Figure Nos. B-65, B-66, B-67), which were protected during flight by TPS-clad, aluminum covers. On the port side of the module were the fuel purge/drain/checkout panel (forward) and the fuel servicing panel (aft), while the starboard side of the module was fitted with the oxidizer purge/drain/checkout panel (forward) and the oxidizer servicing panel (aft). In addition, two electrical panels were situated on the top surface of the module, an access panel to the port side, and a disconnect panel to the starboard. Each side of the module also had a relief vent, one for the MMH (port) and one for the N_2O_4 (starboard).

Midfuselage

The **midfuselage** (Figure No. B-91) was constructed by the Convair Aerospace Division of General Dynamics Corporation in San Diego, California.[484] It had approximate dimensions of 60' in length, 17' in width, and 13' in height, and served as the structural backbone of the orbiter vehicle. On each side of the midfuselage, at the forward end, was a wing glove, which was used as an attachment point for the wing. To the aft of the wing glove, along the bottom of each side of the midfuselage, was the wing attachment interface. At the aft end of the midfuselage was the wing carry-through, just forward of which, on each side, was a main landing gear trunnion support structure, situated within the wing attachment interface.[485]

---

[481] USA, *Crew Operations*, 1.2-3; Boeing, *OV-103, Volume I*, 91.
[482] The RCS is discussed in further detail beginning on page 205.
[483] USA, *Crew Operations*, 1.2-3; Boeing, *OV-103, Volume I*, 91.
[484] Jenkins, *Space Shuttle*, 382.
[485] USA, *Crew Operations*, 1.2-9.

The internal structure of the midfuselage was comprised of twelve main vertical frame assemblies, each of which was fitted with horizontal and vertical side strengthening elements. The horizontal strengthening elements, which sat below the payload bay area, were made from boron/aluminum tubes with bonded titanium end fittings; the vertical side strengthening elements were composed of machined aluminum. These frames divided the midfuselage into thirteen bays. The exterior of the midfuselage was faced with integrally-machined, reinforced aluminum skin panels. The skin panels located above the wing glove and wing attachment interface were reinforced by longitudinal T-stringers (forward eight bays) or aluminum honeycomb panels (aft five bays). The panels within the wing attachment interface had vertical aluminum stiffeners. The forward and aft ends of the midfuselage were open, and fitted with reinforced skin and longerons to provide an interface with the X_O = 582 bulkhead of the forward fuselage and the X_O = 1307 bulkhead of the aft fuselage.[486]

Discovery's midfuselage was strengthened following data collected from the earliest flights of the shuttle program, which showed higher than expected temperatures and stresses. To accomplish this, engineers attached torsional straps through the floor area (forward eleven bays only), which tied together all of the internal stringers, helping to eliminate potential torsional loads. In addition, vulcanized silicon rubber material was bonded to the lower midfuselage, from the fourth through the twelfth bays; this material helped to absorb heat and distribute it more evenly across the lower section.[487]

The midfuselage provided the main support for the payload bay doors, hinges, tie-down fittings, forward wing glove, and various orbiter systems, while forming the payload bay area and interfacing with the forward fuselage, the aft fuselage, and the wings. Supported by the twelve main vertical frame assemblies were the sill longerons, one per side, which with the door longerons, absorbed any bending loads on the vehicle. The sill longerons also supported payloads that were stowed in the payload bay, as well as the Ku-band antenna, the payload bay door actuation system, and, if installed, the RMS.[488] To support the various payloads, each longeron was fitted with 172 potential attach points, spaced at 3.933" on center.[489] These were augmented by eighty-nine attach points along the centerline keel at the bottom of the payload bay, seventy-five of which could support deployable payloads. Mounted above the sill longerons were the door longerons, one per side, which were supported by thirteen hinge fittings. Approximately halfway up each side of the midfuselage was an electrical wire tray, which contained all of the necessary wiring between the aft fuselage and the crew compartment.[490]

---

[486] USA, *Crew Operations*, 1.2-9; Boeing, *OV-103, Volume I*, 95-96.
[487] This same modification was made to *Columbia*, *Challenger*, and *Atlantis*; *Endeavour's* midfuselage incorporated these features in its original construction. USA, *Crew Operations*, 1.2-10; Jenkins, *Space Shuttle*, 382.
[488] The Ku-band antenna, the payload bay door actuation system, and the RMS are further discussed in the communications system section, beginning on page 157.
[489] Forty-eight of these points were technically unusable because of their proximity to orbiter hardware.
[490] USA, *Crew Operations*, 1.2-9, 1.2-10; Boeing, *OV-103, Volume I*, 95-97.

Within the lower portion of the midfuselage was a variety of equipment associated with the orbiter's avionics, electrical power, environmental control and life support, hydraulics, and main propulsion systems. This equipment included such items as LH2 and LO2 tanks, fuel cells, hydraulic fluid lines, Freon pumps, purge circuits, nitrogen lines, power distribution boxes, and wire trays.[491]

Since 1996, *Discovery* contained an external airlock (Figure No. B-92), located within the forward end of the payload bay. The airlock assembly, constructed by Rockwell's Space Transportation Systems Division in Downey, California, provided a place where the astronauts could suit up and prepare for their EVA, without having to depressurize the entire crew compartment.[492] It had an approximate height of 83" and a rough diameter of 63", providing for an empty volume of about 228 cubic feet, and was constructed of aluminum and covered with thermal blankets.[493] The structural interface with the orbiter was via the X_O = 582 bulkhead, trunnion fittings at the payload bay centerline, and a beam-truss framework running across the payload bay.[494] A variety of utility panels and recharging stations were mounted to its internal walls to service and checkout the EVA equipment. The airlock also contained various handrails and foot restraints to assist crewmembers in maneuvering; all were sized for EMU gloves and boots as appropriate. Typically, an airlock stowed two EMUs, and was sized to hold two fully-suited crewmembers at the same time.[495]

The airlock was fitted with three, 40"-diameter, D-shaped openings (Figure No. B-93); the inner hatch, the EVA hatch, and the docking hatch. The inner hatch was mounted to the external surface on the forward side of the airlock, and opened into the middeck. The EVA hatch was mounted to the external surface on the aft side of the airlock, and permitted the crewmembers to exit the airlock into the payload bay. The docking hatch was situated in the top of the airlock and was used for docking operations. Each of the hatches was fitted with six interconnected latches and a gearbox/actuator, a hinge mechanism and hold-open device, a differential pressure gauge on each side, and two equalization valves. Each was also fitted with a 4"-diameter window at the center, the dual panes of which were comprised of polycarbonate plastic. Each hatch was fitted with dual pressure seals, one mounted to the hatch and the other to the airlock structure; a leak check quick disconnect was installed between the seals to verify hatch pressure integrity before flight. The gearbox with latches allowed the crew to open and close the hatch during transfers and EVA operations. The gearbox and latches were mounted to the low pressure side of the

---

[491] USA, *Crew Operations*, 1.2-10; Boeing, *OV-103, Volume I*, 98. These pieces of equipment will be discussed further in the appropriate system's section.
[492] Jenkins, *Space Shuttle*, 381.
[493] USA, *Crew Operations*, 2.11-9. Originally, all of the orbiters, with the exception of *Enterprise*, contained internal airlocks, located at the rear of the middeck. Jenkins, *Space Shuttle*, 379.
[494] Boeing, *OV-103, Volume I*, 101.
[495] A one-person EVA was not permitted by NASA. Additionally, experience has shown that three fully-suited crewmembers could fit in the airlock. Jenkins, *Space Shuttle*, 380.

hatch, but there was a gearbox handle on both sides. This enabled each hatch to be fully locked or unlocked from either side.[496]

The external airlock contained an air circulation system that provided conditioned air to the airlock during non-EVA periods. The duct for this system was installed once the inner hatch was opened, and needed to be removed before the hatch was closed for airlock depressurization. Depressurization was controllable only from inside the airlock. This operation was conducted immediately prior to the EVA, after all prebreathe sessions and suit checkouts. The airlock was not repressurized until the EVA was complete, and the participating crewmembers had returned; this operation could be controlled from either the middeck or inside the airlock.[497]

The external airlock was fitted with an orbiter docking system (Figure No. B-94) that was used to dock the shuttle to the ISS. It had approximate dimensions of 6.5' in length, 15' in width, and 13.5' in height.[498] The system consisted of three major components: the external airlock (described above), the truss assembly, and the androgynous peripheral docking system.[499] The truss assembly was physically attached to the payload bay, and provided a sound structural base to house the components of the docking system. It also held rendezvous and docking aids, such as camera/light assemblies and trajectory control systems.[500]

The androgynous peripheral docking system achieved the capture, dynamic attenuation, alignment, and hard docking of two spacecraft through identical mechanisms attached to each vehicle. The docking system was supported by a structural base ring that housed twelve pairs of structural hooks; attached to this was an extendible guide ring with three petals. Each guide petal contained a motor-driven capture latch. The docking system also contained three interconnected ball screw/nut mechanism pairs; six electromagnetic brakes (dampers); and five fixer mechanisms, which allowed for only z-axis movement of the active ring.[501]

Payload Bay Doors

The orbiter's **payload bay doors** (Figure No. B-95) were manufactured by Rockwell International's Tulsa, Oklahoma, Division.[502] Each door had a total length of 60', and was comprised of five segments, which were made of graphite epoxy/Nomex composite honeycomb panels; between each segment was a circumferential expansion joint to assist with the extreme temperature changes. The five segments were sized and arranged so that each door was divided into a forward section and an aft section, each of which had an approximate length of 30'. Each door roughly measured 8.75' along the y-axis and 6.7' along the z-axis, and had a mean chord of

[496] USA, *Crew Operations*, 2.11-10, 2.11-12.
[497] USA, *Crew Operations*, 2.11-8.
[498] Jenkins, *Space Shuttle*, 381.
[499] USA, *Crew Operations*, 2.19-1.
[500] USA, *Crew Operations*, 2.19-1.
[501] USA, *Crew Operations*, 2.19-2.
[502] Jenkins, *Space Shuttle*, 383.

approximately 10'. Each was capable of opening to a maximum angle of 175.5 degrees. Although the payload bay was not a pressurized area, thermal seals were fitted to the doors to provide an air-tight space when they were closed and latched.[503]

Each door was connected to its corresponding midfuselage longeron with thirteen Inconel-718 external hinges. Eight of these were "floating" hinges that allowed forward and aft movement of the door panels in response to thermal expansion and contraction of the materials. Each door was driven by a rotary actuator that powered a 55'-long torque shaft, which pushed the door open and pulled it closed; the right (starboard) door had to be opened first and closed last because it contained the structural/seal overlap and the centerline latching mechanism. This latching mechanism was comprised of sixteen latches, which were grouped into four latch gangs. Each of these gangs consisted of four latches, bellcranks, push rods, levers, rollers, and an electromechanical actuator. Additionally, the payload bay doors were further secured by eight positive position latches at each end (four per side), which hooked into the forward and aft fuselage bulkheads.[504]

The payload bay doors maintained a pressure seal for the payload bay during the ascent and descent phases of flight, and then provided crew access to the onboard payloads while in space. Since the doors remained open nearly the entire time the vehicle was in orbit, each was fitted with two to four radiator panels that were considered part of the orbiter's active thermal control system.[505]

Wings

The two orbiter **wings** (Figure No. B-96) were fabricated from conventional aluminum alloys by Grumman Aerospace of Bethpage, Long Island, New York.[506] Each wing had a length of roughly 67', a width that ranged from 1' to 29', and a maximum height (thickness) of approximately 5'. Each wing consisted of a wing glove/forward wing box, a leading edge spar, an intermediate section (within which was the main landing gear well), a torque box, the wing/elevon interface, the elevon seal panels, and two elevons along the trailing edge. The inner leading edge of the wing (i.e., the edge of the forward part of the wing) had an 81 degree sweep; the outer leading edge (i.e., the edge of the aft part of the wing) had a 45 degree sweep. The wings were attached to the wing interface sections of the midfuselage by a tension bolt splice along the upper surface, and a shear splice along the lower surface. Together, they provided the conventional lift and control for the orbiter when it was within the Earth's atmosphere.[507]

---

[503] Boeing, *OV-103, Volume I*, 103-104; Jenkins, *Space Shuttle*, 383.
[504] Boeing, *OV-103, Volume I*, 104-105; Jenkins, *Space Shuttle*, 383.
[505] Boeing, *OV-103, Volume I*, 104; Jenkins, *Space Shuttle*, 383. The radiator panels, manufactured by LTV in Grand Prairie, Texas (now Lockheed Martin), are described in more detail beginning on page 182. Jenkins, *Space Shuttle*, 384.
[506] Jenkins, *Space Shuttle*, 387.
[507] USA, *Crew Operations*, 1.2-7; Boeing, *OV-103, Volume I*, 92; Jenkins, *Space Shuttle*, 387. A weight reduction program was initiated for the orbiters following construction of *Columbia* and *Challenger*, and before the

The forward wing box, which roughly extended from the X_O = 807 mark to the X_O = 1008 mark, had an internal structure that was comprised of aluminum ribs, aluminum tubes, and tubular struts; its skin panels were fabricated of stiffened aluminum. Its purpose was to aerodynamically blend the wing leading edge into the midfuselage wing glove. The leading edge spar of the forward wing box, situated along the outboard section of the wing, was constructed of corrugated aluminum, and served as the attachment point for the RCC wing leading edge panels.[508]

The intermediate section of each wing was approximately located between the X_O = 1008 and X_O = 1191 marks. Its internal structure was made of aluminum multiribs and tubes, while the skin was comprised of aluminum alloy honeycomb panels. It was within this section that the angle of the leading edge sweep changed. Along the inner face of the intermediate section of each wing, between the X_O = 1040 and the X_O = 1191 marks, was its corresponding main landing gear wheel well. The wheel well, which had approximate dimensions of 12.6' in length and 6' in width, was fitted with doors that were attached to the lower surface of the wing. The outboard door hinges, as well as the outboard main landing gear trunnion and drag link, were braced by a structural rib; the inboard counterparts were supported by the midfuselage. The doors were comprised of conventional aluminum honeycomb panels, with machined aluminum hinge beams and hinges. Each was fitted with pressure seals and thermal barriers.[509]

The torque box of each wing extended from approximately the X_O = 1191 mark to roughly the X_O = 1365 mark. It had an internal structure comprised of a conventional eleven, aluminum alloy rib truss arrangement with four graphite composite spars; its upper and lower surfaces were formed by stiffened aluminum panels.[510] As the primary structural portion of the wing, its purpose was to carry airloads into the midfuselage, as well as to resist bending and twisting loads. Immediately to the aft of the torque box was the wing/elevon interface area, which was roughly located between the X_O = 1365 and the X_O = 1397 marks. This area was comprised of a series of fifteen hinged panels, commonly referred to as flipper doors, which were attached to the trailing edge spar of the torque box; they were manufactured of aluminum and covered with FRSI.[511]

Each of *Discovery's* wings had a two-piece elevon (see Figure No. B-96), divided into an inboard segment and an outboard segment, which were physically connected to the trailing edge

---

construction of *Discovery* and *Atlantis*, leading to a redesign of portions of the wings. As a result, additional doublers and stiffeners were inserted into the *Discovery* and *Atlantis*' wings to maintain positive margins of safety. USA, *Crew Operations*, 1.2-9; Jenkins, *Space Shuttle*, 388.

[508] USA, *Crew Operations*, 1.2-7, 1.2-8; Boeing, *OV-103, Volume I*, 92. *Columbia* and *Challenger's* leading edge spars were made of non-corrugated aluminum honeycomb sandwich construction. *Enterprise's* leading edge spar was made of fiberglass.

[509] USA, *Crew Operations*, 1.2-8; Boeing, *OV-103, Volume I*, 92-93.

[510] *Columbia* and *Challenger* had corrugated aluminum spars, which was later shown to be inadequate, leading to the installation of an additional rib.

[511] USA, *Crew Operations*, 1.2-8; Boeing, *OV-103, Volume I*, 94. Prior to 2000, the inner eight panels were made of titanium honeycomb sandwich construction, while the outer seven panels were comprised of Inconel honeycomb sandwich construction. Jenkins, *Space Shuttle*, 388.

spar of the torque box. The inboard elevon measured approximately 13.79' in width; the length at its inner face was roughly 8.72', while the length at its outer face was about 6.27'. The outboard elevon had a width of approximately 12.42', with an inner length of about 6.08' and an outer length of roughly 3.88'. The elevons were comprised of conventional aluminum multirib and beam construction, and faced with aluminum honeycomb skins. Their upper leading edge was fitted with a titanium rub strip that provided a sealing surface for the flipper doors. Protective thermal seals were located on the elevon lower cove area, while thermal spring seals were fitted on the upper rub strip. Each elevon segment was connected to the trailing edge spar by three hinges, which were attached to hydraulic actuators, which allowed for a maximum deflection of 33 degrees upward and 18 degrees downward.[512]

Aft Fuselage

The **aft fuselage** (Figure No. B-97), which was manufactured by Rockwell International in Downey, California, had approximate overall dimensions of 18' in length, 22' in width, and 20' in height.[513] At the forward end of the aft fuselage was the X_O = 1307 bulkhead, which was comprised of machined and beaded sheet aluminum segments and served as the interface with the midfuselage. It also provided the forward attachment point for the vertical stabilizer, through an aluminum support frame that extended for the entire length of the fuselage. At the rear of the aft fuselage was the heat shield (at roughly the X_O = 1293 mark), that closed off the fuselage and protected the SSMEs during ascent and reentry. This shield consisted of a machined aluminum base, to which were attached honeycomb domes that supported flexible and sliding seal assemblies. There were also three engine-mounted head shields, comprised of Inconel honeycomb material, which were removable for access to the SSME power heads. Below the heat shields was a small compartment that contained the four hinge points and actuators for the body flap.[514]

Aside from the X_O = 1307 bulkhead and the aft heat shield, the aft fuselage was comprised of an outer shell, a SSME thrust structure, and an internal secondary structure. The outer shell was composed of integral-machined aluminum, with numerous penetrations associated with the internal systems. On the top surface of the outer shell, there was one APU exhaust port, three water spray boiler vent, and one ammonia vent to the starboard side of the vertical stabilizer, and two APU exhaust ports and one LH2 feedline relief vent to the port side of the vertical stabilizer. The rear of the outer shell, or the heat shield, contained three openings for the SSMEs, one on top and two on the bottom, as well as one propellant crossfeed disconnect access panel to either side of the top engine. The starboard and port sides of the outer shell were mirror images of one another. Each contained an aft hoist attach access point, just below the forward end of the

[512] USA, *Crew Operations*, 1.2-8; Boeing, *OV-103, Volume I*, 93-94. The elevons are technically capable of deflecting 40 degrees upward and 20 degrees downward; however, the 33/18 limits were set to avoid over-stressing the airframe. USA, *Crew Operations*, 1.2-8; Jenkins, *Space Shuttle*, 388.
[513] USA, *Crew Operations*, 1.2-10; Boeing, *OV-103, Volume I*, 106; Jenkins, *Space Shuttle*, 385.
[514] USA, *Crew Operations*, 1.2-11; Boeing, *OV-103, Volume I*, 107.

OMS/RCS pod; an aft fuselage access door to the rear of the attach point; a T-0 umbilical panel below the aft end of the OMS/RCS pod; an APU servicing panel; and various vent holes.[515]

The bottom surface of the aft fuselage (see Figure No. B-68) featured the two ET attach/umbilical compartments, the compartment for the LO2 situated on the starboard side and the LH2 on the port side. The ET attach point in each compartment was situated at the outer forward corner, with a jack pad directly behind it.[516] The LO2 compartment also had a LO2 feedline disconnect at the inner forward corner with a gaseous oxygen (GO2) pressurization disconnect to its outer aft side, and an electrical umbilical in the aft center. Likewise, the LH2 compartment had a LH2 feedline disconnect at the inner forward corner with a gaseous hydrogen (GH2) pressure disconnect to its outer aft, an electrical umbilical in the aft center, and a LH2 tank recirculation disconnect towards the inner aft corner. Each of the compartments was fitted with a 48" x 48" beryllium door that electromechanically closed following ET separation. The two door hinges were located on the inner sides of the compartments.[517]

The internal thrust structure (see Figure No. B-97) was essentially a framework that was primarily comprised of twenty-eight machined, diffusion-bonded truss members; the bonds were formed with titanium strips.[518] In selected areas, the structure was reinforced with boron-epoxy tubular struts, which added stiffness to the component while minimizing the weight. The internal thrust structure was divisible into an upper thrust structure, which supported the top SSME, and a lower thrust structure that held the bottom two SSMEs. The upper thrust structure was composed of integral-machined aluminum construction with aluminum frames, with the exception of the vertical fin support frame, which was made of titanium. This structure also supported the OMS pods, the drag chute compartment, and the upper SSME.[519] In addition, the internal thrust structure included the SSME load reaction truss structure, engine interface fittings, and the SSME gimbal actuator support structure.[520]

The aft fuselage's internal secondary structure was made of conventional aluminum, with titanium and fiberglass used to thermally isolate the equipment within the component. The assembly contained various secondary brackets, buildup webs, trusses, and machined fittings for additional support where loads were higher, and included support provisions for the APUs, avionics, hydraulics, environmental control and life support systems, and electrical wiring trays. Some of these supports were shock-mounted to the structure.[521]

---

[515] USA, *Crew Operations*, 1.2-11; Boeing, *OV-103, Volume I*, 108.
[516] The mount mechanism was considered part of the ET and is described in that section.
[517] USA, *Crew Operations*, 1.2-11; Boeing, *OV-103, Volume I*, 108.
[518] *Endeavour's*, however, is made of built-up titanium forgings. Jenkins, *Space Shuttle*, 386.
[519] The drag chute compartment was an add-on for *Columbia*, *Challenger*, *Discovery*, and *Atlantis*; it was a built-in production feature for *Endeavour*. Jenkins, *Space Shuttle*, 386.
[520] USA, *Crew Operations*, 1.2-11; Boeing, *OV-103, Volume I*, 107.
[521] USA, *Crew Operations*, 1.2-11; Boeing, *OV-103, Volume I*, 108.

The aft fuselage housed the main propulsion system of the orbiter (Figure No. B-98), including the three SSMEs and the propellant distribution manifold, as well as the APU and hydraulics systems, the flash evaporators, and the ammonia boiler. It supported and interfaced with the two OMS pods, the wing aft spar, the midfuselage, the orbiter/ET rear attachments, the SSMEs, the aft heat shield, the body flap, the vertical tail, and two T-0 launch umbilical panels. It also provided a load path to the midfuselage main longerons, main wing spar continuity across the forward bulkhead of the aft fuselage, structural support for the body flap, and structural housing around all internal systems for protection from operational environments and controlled internal pressures during flight.[522]

Orbital Maneuvering System/Reaction Control Subsystem Pods

Discovery was fitted with two rear **OMS/RCS pods** (Figure Nos. B-99, B-100), which were manufactured by the McDonnell Douglas Astronautics Company, St. Louis, Missouri.[523] Each pod had a length of 21.8', excluding the RCS housing, with a forward width of 8.41' and an aft width of 11.37', and a maximum height of 5'-9". The pods were comprised of a load-bearing thrust structure, made of 2124 aluminum alloy, with cross braces fabricated from aluminum tubing. Each pod also had a forward and aft support bulkhead, and a floor truss beam, comprised of 2124 aluminum alloy, and a centerline beam, made from 2024 aluminum sheeting with titanium stiffeners and graphite-epoxy frames. The curved skin panels were made from graphite epoxy composite honeycomb sandwich material. The RCS housing, with approximate overall dimensions of 64" in length and width, and 40" in height, was situated at the lower outside aft end of each pod. It was comprised of aluminum sheet metal (flat areas) and graphite epoxy honeycomb sandwich (curved panels). The RCS housing attached to the rear of the OMS section of the pod.[524]

Each pod was mounted to one of the outboard sides of the aft fuselage, right or left, by eleven bolts; pressure and thermal seals were located at the interface. Although each could be removed separately for maintenance, when they were attached to the orbiter, their internal propellant tanks were connected via crossfeed lines, which allowed a propellant exchange between the two pods. The pods were capable of withstanding acoustic levels up to 162 decibels, and heat levels between -170 degrees and +135 degrees Fahrenheit.[525]

The surface panels of each OMS/RCS pod held the engine interfaces, as well as removable panels that provided access to the internal systems and the attach points. The RCS housing carried twelve primary thrusters, three on the upper face, three on the lower face, four on the outer face, and two on the aft face, as well as two vernier thrusters, one on the lower face and one on the aft face. Thermal barriers were provided at each RCS thruster. The inner face of the

[522] USA, *Crew Operations*, 1.2-10, 1.2-11; Boeing, *OV-103, Volume I*, 106-107.
[523] Jenkins, *Space Shuttle*, 389.
[524] USA, *Crew Operations*, 1.2-11, 1.2-12; Boeing, *OV-103, Volume I*, 112-113.
[525] Jenkins, *Space Shuttle*, 389-390.

housing contained the RCS manifold drain/purge panel. To the inside of the RCS housing, in the aft face of each OMS section, was a single OMS engine. Adjacent to the engine was the ground service panel for both the OMS and RCS engines. The curved surface of the pod contained a pressurant checkout panel, an electrical/hydraulics access panel, and various relief valves.[526]

The interior of the RCS housing only contained the thrusters and the fuel and oxidizer piping. The actual fuel tanks were located in the forward portion of the main section of the pod; the MMH (fuel) tank to the upper side and the N_2O_4 (oxidizer) tank to the lower side. Two helium pressurization tanks for the RCS sat near the upper aft end of the pod. To the aft of the RCS fuel and oxidizer tanks were the respective tanks for the OMS engine; its helium pressurization tank was situated to the aft of the OMS oxidizer tank. Other components within the pod included fuel/oxidizer piping between the OMS engine and its associated tanks, piping between the helium pressurization tanks and their associated fuel tanks, and various relief valves.[527]

Vertical Stabilizer

The **vertical stabilizer** (Figure B-101) was fabricated by Fairchild Republic in Farmingdale, Long Island, New York.[528] It had a true horizontal length of approximately 32', a true vertical height of roughly 24', and a leading edge sweep of 45 degrees. It was attached to the top of the aft fuselage by two tension tie bolts at the front, and eight shear bolts at the rear; a thermal barrier was provided at the interface between the stabilizer and the aft compartment. The vertical stabilizer, which consisted of a structural fin surface, the rudder/speed brake surface, a tip and a lower trailing edge, was designed to handle an acoustical environment of up to 163 decibels, and a temperature of up to 350 degrees F.[529]

The fin structure was essentially a torque box that was manufactured of integral aluminum ribs, webs, stringers, and integral-machined aluminum spars.[530] It was through this subcomponent that the vertical stabilizer was attached to the vehicle. It was also primarily this subcomponent that provided the vertical stability for the orbiter. The tip of the vertical stabilizer was also made of aluminum, while the lower trailing edge, which housed the rudder/speed brake power drive unit, had aluminum honeycomb skin panels. While the fin structure is a common component on conventional aircraft, the split rudder/speed brake assembly was unique to the orbiter vehicle. The assembly, which had approximate dimensions of 16.6' in height, 7.5' in width at the bottom, and 4.18' in width at the top, was made of conventional aluminum ribs and spars, faced with aluminum honeycomb skin panels. It was attached to the vertical tail fin through rotating hinge

[526] Jenkins, *Space Shuttle*, 391.
[527] USA, *Crew Operations*, 1.2-12; Boeing, *OV-103, Volume I*, 113.
[528] The vertical tail for *Endeavour* was manufactured by Grumman Aerospace of Long Island, New York, who had taken over many of Fairchild Republic's contracts prior to the construction of this fifth orbiter. Jenkins, *Space Shuttle*, 388.
[529] USA, *Crew Operations*, 1.2-13, 1.2-14; Boeing, *OV-103, Volume I*, 109.
[530] *Enterprise's* vertical stabilizer was made of conventional aluminum alloy skin and stringer construction. Jenkins, *Space Shuttle*, 388.

parts; an Inconel honeycomb aerodynamic seal and a thermal barrier seal were situated between the two.[531]

The rudder/speed brake assembly was powered by the orbiter's hydraulic system. Each half of the split rudder was fitted with its own drive shaft, allowing the assembly to be operated solely as a rudder, solely as a speedbrake, or a combination of the two. When operated as a rudder, to provide yaw control for the vehicle within low supersonic and subsonic speeds, both drive shafts were turned in the same direction, to a maximum deflection of 27 degrees, with a maximum deflection rate of 14 degrees per second. When the assembly was operated as a speed brake, the shafts were turned in opposite directions for a maximum deflection of 49.3 degrees for each half, with a maximum deflection rate of 10 degrees per second. When combined, the assembly had a total maximum deflection of 61.5 degrees.[532]

Body Flap

The **body flap** (Figure No. B-102), which was manufactured by Rockwell International's Structures Division in Columbus, Ohio, was the wedge-shaped component that was mounted to the lower trailing edge of the aft fuselage.[533] It had an approximate total length of 7.24', with a width of 21.08' where it connected to the aft fuselage and a width of 18.25' at its trailing edge. It consisted of two main parts: a forward section and a trailing edge. The forward section was comprised of aluminum honeycomb skin panels, which were supported by aluminum ribs and spars. The forward end of its upper face contained five removable panels, which were attached to the internal ribs with quick-release fasteners. These panels provided access to the four integral-machined aluminum actuator ribs that were fitted with two self-aligning bearings for mechanical attachment to the four rotary actuators within the aft fuselage. The remaining skin panels on the forward section of the body flap were attached to the internal supports with structural fasteners. The lower surface was also fitted with an articulating pressure and thermal seal, which blocked heat and air from entering the aft fuselage, as well as protected the hinges and actuators from thermal damage. The trailing edge of the body flap, which had an approximate length of 2.33', was a full-depth aluminum honeycomb panel. It was attached to the forward section of the body flap by hinge pins connected to piano-hinge half cap angles mounted on the rear spar. Extending through the trailing edge were two moisture drain lines and one hydraulic fluid line.[534]

The main functions of the orbiter's body flap were to shield the three SSMEs from the heat of reentry, and to provide pitch control for the vehicle during atmospheric flight following its reentry into Earth's atmosphere. The body flap was capable of pivoting 15.7 degrees upward and 26.55 degrees downward.[535]

---

[531] USA, *Crew Operations*, 1.2-13; Boeing, *OV-103, Volume I*, 109-110.
[532] USA, *Crew Operations*, 1.2-14. Limited rudder operations were also available when the assembly was at its full speedbrake position (total angle of 98.6 degrees).
[533] Jenkins, *Space Shuttle*, 386.
[534] USA, *Crew Operations*, 1.2-12, 1.2-13; Boeing, *OV-103, Volume I*, 114-115.
[535] USA, *Crew Operations*, 1.2-12; Jenkins, *Space Shuttle*, 386.

Orbiter Markings

Discovery had various markings applied to her outer surfaces. These markings typically served one of two purposes: to identify the vehicle or to provide instructions to ground technicians. On both the port and starboard sides of the forward fuselage, just below the flight deck windows and roughly in line with the payload bay door hinges, *Discovery's* name was painted in black lettering. Her name was also painted on the top surface of the starboard wing, just forward of the inboard elevon. Above her name on the starboard wing was a painted U.S. Flag; the NASA "meatball" logo was painted on the top surface of the port wing. In addition, towards the aft end of both the port and starboard sides of the midfuselage, was a painted U.S. Flag, the words "United States," and a NASA "meatball" logo.[536]

All of *Discovery's* instructional markings were located toward the forward end of the vehicle. On the port side of the vehicle, there were rescue instructions on the crew hatch, and locational data and instructions for a fuel cell purge port. The starboard side also contained instructions for an emergency rescue of the crew, as well as data regarding a fuel cell purge port. On top of the vehicle, to the port side of the overhead windows, was a triangular danger sign.

Thermal Protection System

Discovery's exterior was covered with a TPS (Figure Nos. B-103 through B-107) that kept the orbiter's structural skin from exceeding 350 degrees F, primarily during the reentry phase of a mission. Earlier spacecraft had used ablative heat shield materials, but these forms of thermal protection could only be used once because the materials were designed to burn away, carrying the excess thermal energy. Due to the reusable nature of the Space Shuttle orbiter, heat-sink materials were chosen to protect the vehicle's aluminum structure because they were reusable. In addition, the TPS was capable of handling the forces induced by deflections in the orbiter's airframe as the structure responded to different external environments (i.e., the wide range of temperatures experienced in the vacuum of space).[537] The materials also established the aerodynamics over the vehicle.[538]

Discovery's TPS was comprised of three principal components, which included RCC, insulation tiles, and insulation blankets. *Discovery* was fitted with fifty-seven RCC panels/segments,

---

[536] The flag on the starboard side is painted in the reverse of how it is normally viewed, with the stars in the upper right corner. This portrayal of the flag is proper for the starboard side of a moving vehicle, as it gives the effect of the flag flying in the breeze as the wearer moves forward.

[537] David Baker, *Owners' Workshop Manual* (Minneapolis, Minnesota: Zenith Press, 2011), 72-74. A heat sink is a component that is used to conduct heat away from an object, in this case the orbiter's airframe, that would otherwise reach destructive temperatures.

[538] *Atlantis* and *Endeavour* had the same amount of RCC panels, and roughly the same quantities of tiles and blankets. *Columbia's* tile count was higher and its blanket count lower than *Discovery's*; the same was true of *Challenger*. USA, *Crew Operations*, 1.21-15. Aerodynamics refers to the study of the motion of air, particularly when it interacts with a moving object.

roughly 24,300 tiles, and about 3,300 blankets. The heat load experienced during reentry determined which component was used in a specific location. Gap fillers were used to supplement the principal TPS components.[539]

Reinforced Carbon-Carbon

RCC was used where reentry temperatures on the vehicle exceeded 2,300 degrees F. This included *Discovery's* wing leading edges, nose cone, chin panel, and the immediate area around the forward orbiter/ET attach point; these locations reached the highest temperatures during reentry.[540] The twenty-two leading edge panels on each wing were connected to the wing forward spar with metallic floating joints, which helped to reduce loading on the tiles caused by wing deflections. These metallic joints were protected by Incoflex insulation.[541] T-seals, also made of RCC, were placed between the panels to prevent the flow of hot gases into the leading edge cavity and to allow for lateral motion and thermal expansion. The nose cap was a single piece of RCC, which was secured to the lower forward fuselage by a pair of thermal seal strips, also made of RCC. The nose cone area was further insulated by a ceramic-fiber blanket filled with silica fibers.[542] The RCC chin panel, comprised of a single piece of RCC, was installed on *Discovery* in 1988.[543] Below the eleven RCC panels around the orbiter-ET attach point was a ceramic-fiber blanket filled with silica fibers, similar to the one below the nose cone.[544]

Discovery's RCC panels were manufactured by LTV (now Lockheed Martin) of Grand Prairie, Texas. RCC was a composite material comprised of pyrolyzed carbon fibers within a pyrolyzed carbon matrix, and coated with silicon carbide.[545] The carbon fibers/matrix provided rigidity and strength, while the silicon carbide coating provided high-temperature oxidation protection. The panels underwent densification with a hydrolyzed tetraethylorthosilane solution, and were sealed with sodium silicate for additional protection against oxidization.[546] The RCC panels were resistant to temperatures of up to 3,000 degrees F and were excellent thermal conductors.

---

[539] NASA, *Orbiter Thermal Protection System*, NASA Facts (Florida: Kennedy Space Center, 2008), 2, http://www.nasa.gov/centers/kennedy/pdf/167473main_TPS-08.pdf.
[540] The chin panel was the area on the lower surface, immediately aft of the nose cap.
[541] Jenkins, *Space Shuttle*, 398. In January 1999, Nextel 440 insulation was added to *Discovery*'s lower RCC wing leading edge panels to prevent plasma flow from entering the wings in case orbital debris punctured the RCC.
[542] Jenkins, *Space Shuttle*, 398-9.
[543] Initially, this area was fitted with high-temperature reusable surface insulation (HRSI) tiles. Due to constant damage by impacts during ascent and overheating during reentry, the decision was made to replace the tiles with RCC. Jenkins, *Space Shuttle*, 399.
[544] Jenkins, *Space Shuttle*, 399.
[545] Jenkins, *Space Shuttle*, 397. Pyrolysis is a thermochemical decomposition of organic compounds without the use of oxygen. The process generates gas and liquid products, while leaving a carbon-rich solid residue.
[546] NASA, *Orbiter Thermal Protection System*, 5. Densification is a process by which the density of a material is increased. The inner surface of all TPS tiles were densified to a depth of 0.125", which allowed for a more even distribution of applied loads.

Insulation Tiles

Five different types of insulation tiles were used on *Discovery*. These included high-temperature reusable surface insulation (HRSI), low-temperature reusable surface insulation (LRSI), fibrous refractory composite insulation (FRCI), toughened uni-piece fibrous insulation (TUFI),[547] and Boeing Rigid Insulation (BRI). To adhere the tile to the airframe, a strain isolation pad made of Nomex felt, which limited vibration-induced damage and compensated for thermal expansion and contraction, was bonded to the tile. The tile and pad combination was then bonded to the orbiter with a silicone adhesive, which remained flexible at low temperature and maintained bond strength at high temperatures.[548]

Like the RCC panels, **HRSI tiles** have been used on the orbiters since original assembly. These tiles covered the entire underside of *Discovery*, except the few places that used RCC. HRSI tiles were also located around the flight deck windows, on the FRCS module around the thrusters, on the sides of the forward fuselage immediately aft of the FRCS module, the wing glove areas, the interface between the wings and the wing leading edge panels, and the upper side of the elevon trailing edges. In addition, HRSI tiles were fitted on the forward and lower aft sides of the OMS/RCS pods, along the leading and trailing edges of the vertical stabilizer, on the SSME base heat shield, and on the upper body flap surface.[549] The tiles were available in two bulk densities, 9 pounds per cubic foot and 22 pounds per cubic foot. There were roughly 20,000 low-density tiles and 525 high-density tiles on *Discovery*.[550] The tiles were produced in 6” x 6” squares, cut to fit their specified location, and ranged in thickness from 1” to 6”. The thicker tiles were generally found toward the front of the orbiter, where more heat was encountered.[551]

Manufactured by Lockheed Missiles and Space Company[552] of Sunnyvale, California, HRSI tiles were made from a slurry composed of 99.8 percent silica glass fibers and water; only 10 percent of the total volume was solid material. After they were machined to the precise shape, a reaction-cured glass coating was applied to the top surface and sides, which turned a glossy black color after being baked in a kiln. The black coating allowed for maximum heat loss during reentry. In addition, the tiles received two applications of a waterproofing agent (dimethylethoxysilane) and one application of a silica powder densifier. HRSI tiles could withstand temperatures up to 2,300 degrees F.[553]

---

[547] Jenkins, *Space Shuttle*, 395-401.
[548] NASA, *Orbiter Thermal Protection System*, 4.
[549] Jenkins, *Space Shuttle*, 397-398. HRSI tiles were located in the same places on *Columbia*, *Challenger*, *Atlantis*, and *Endeavour*. *Columbia* also had HRSI tiles on her rudder/speed brake and upper wing surfaces.
[550] NASA, *Orbiter Thermal Protection System*, 2. The higher density HRSI tiles were used around the windows and landing gear doors. NASA, *Orbiter Thermal Protection System*, 3.
[551] NASA, *NSTS Manual*.
[552] The Lockheed Missiles and Space Company is now known as the Lockheed Martin Corporation.
[553] Jenkins, *Space Shuttle*, 399; NASA, *Orbiter Thermal Protection System*, 3.

LRSI tiles were also original to the orbiters. On *Discovery*, these tiles were located on top of the forward fuselage, between the cockpit and overhead windows, and on the forward section of the OMS pods.[554] LRSI tiles came in two densities, 9 pounds per cubic foot and 12 pounds per cubic foot; there were approximately 725 and seventy-seven of each density on the orbiter, respectively. In contrast to the HRSI tiles, LRSI tiles ranged from 0.2" to 1.4" thick, and were produced in 8" x 8" squares; they were also cut to fit their designated location. LRSI tiles could withstand temperatures up to 1,200 degrees F.[555]

LRSI tiles were also manufactured by Lockheed Missiles and Space Company, and were very similar to HRSI tiles in composition. LRSI tiles also underwent the exact same waterproofing and densification processes. The main difference between the two was the applied coating, which for LRSI tiles turned white.[556] The white coating provided thermal control for the vehicle while it was in orbit.

FRCI tiles were developed after the SSP began. Approximately 2,950 FRCI tiles have replaced damaged HRSI tiles on *Discovery* since her maiden voyage in 1984; the FRCI tiles were not characteristic of any particular area of the vehicle. FRCI tiles had a bulk density of 12 pounds per cubic foot, and were comprised of 20 percent Nextel and 80 percent silica.[557] The tiles were produced in 6" x 6" squares, cut to fit their specified location, and ranged in thickness from 1" to 5". Like HRSI tiles, FRCI tiles were able to withstand temperatures up to 2,300 degrees F.[558]

FRCI tiles were developed by NASA's Ames Research Center ca. 1981, and manufactured by Lockheed Martin. The manufacturing process for FRCI tiles was similar to the process used to make HRSI tiles. As noted above, the slurry for the FRCI tiles contained 20 percent Nextel fiber, which resulted in a more durable and lighter tile. Additionally, the glass coating for the FRCI tiles was compressed as it was cured, to reduce the coating's sensitivity to cracking.[559]

TUFI tiles were also developed following the start of the SSP. Approximately 304 TUFI tiles were located on *Discovery's* base heat shield and lower body flap surface. TUFI tiles were essentially FRCI tiles that included small quantities of alumina fiber in the base slurry, which increased the thermal stability and conductivity of the material. TUFI tiles, also known as alumina-enhanced thermal barrier (AETB-8) tiles had a density of approximately 8.4 pounds per

---

[554] LRSI tiles were located in the same places on *Columbia*, *Challenger*, *Atlantis*, and *Endeavour*. *Columbia* also had LRSI tiles on portions of her upper wing surfaces, the upper surface of the two outboard elevons, the top of the FRCS module (in areas where the HRSI tiles were not used), on portions of the vertical stabilizer, and on the rudder/speed brake.
[555] Jenkins, *Space Shuttle*, 400; NASA, *Orbiter Thermal Protection System*, 3.
[556] Jenkins, *Space Shuttle*, 400.
[557] Jenkins, *Space Shuttle*, 399-400; NASA, *Orbiter Thermal Protection System*, 2-3. Nextel is the trademark name for an alumino-boro-silicate fiber developed by the 3M Company.
[558] Jenkins, *Space Shuttle*, 400; NASA, *NSTS Manual*.
[559] NASA, *NSTS Manual*.

cubic foot.[560] The tiles were also more resilient to debris strikes because of the higher density exterior. TUFI tiles were developed in 1993 by NASA's Ames Research Center; they were fabricated by Rockwell International. Like HRSI and FRCI tiles, TUFI tiles were able to withstand temperatures up to 2,300 degrees F.[561]

BRI tiles were the fifth and last tiles used on the orbiter; the tiles were located on *Discovery*'s landing gear doors, wing leading edge, and external tank doors. They were developed by Boeing following the *Columbia* accident, and had a density of 18 pounds per cubic foot.[562] The tiles were made of a mixture of silica and alumina fibers and were processed so that the alumina fibers laid flat to conduct heat horizontally rather than vertically. BRI tiles were also five to ten times stronger and more durable than their predecessors and were capable of reaching higher reentry temperatures without warping. Like HRSI, FRCI and TUFI tiles, BRI tiles were able to withstand temperatures up to 2,300 degrees F.[563]

Insulation Blankets

There were two different styles of TPS insulation blankets: FRSI blankets and Fibrous Insulation Blankets (FIBs), which are also known as Advanced FRSI (AFRSI) blankets. Both types of insulation blankets were bonded directly to the orbiter by a room-temperature vulcanizing (RTV) silicon adhesive. The adhesive was applied at a thickness of roughly 0.20" to reduce weight and minimize thermal expansion during temperature changes. The direct application of the blankets also improved durability, reduced fabrication and installation costs, and reduced installation time.[564]

FRSI blankets have been used on the orbiters since original assembly. These blankets were located on the top surface of the forward three-quarters of *Discovery's* payload bay doors, on the upper surface of her wings, and on the upper surface of her two inboard elevons.[565] FRSI blankets were made of Nomex felt and coated with a white-pigmented silicone rubber paint, which waterproofed the felt and provided the required thermal and optical properties. FRSI blankets generally measured 3' x 4', and were between 0.16" and 0.32" thick. FRSI blankets could withstand temperatures up to 700 degrees F.[566]

---

[560] Jenkins, *Space Shuttle*, 400; Richard W. Orloff, ed., *Space Shuttle Mission STS-59 Press Kit* (Washington, DC: NASA, 1994), 37, http://www.scribd.com/doc/19723409/NASA-Space-Shuttle-STS59-Press-Kit.
[561] NASA, STS-59 Press Kit, 37.
[562] NASA, *Orbiter Thermal Protection System*, 6. The tiles first flew on *Discovery's* nose landing gear doors during STS-121 in 2006. Bob Howard, "Beat the Heat: Boeing Team Develops Tiles to Make Shuttle Safer, Easier to Maintain," *Boeing Frontiers* June 2006, http://www.boeing.com/news/frontiers/archive/2006/june/i_ids2.html.
[563] Howard, "Beat the Heat."
[564] Jenkins, *Space Shuttle*, 401.
[565] FRSI blankets were located in the same places on *Challenger*, *Atlantis*, and *Endeavour*. *Columbia* had FRSI blankets on portions of her upper wing surfaces, around the overhead windows in the forward fuselage, on the entire top surface of her payload bay doors, on the aft sides of the payload bay doors, on large sections of her midfuselage, and on the upper surface of the two inboard elevons.
[566] Jenkins, *Space Shuttle*, 400-401; NASA, *Orbiter Thermal Protection System*, 3. The lighter FRSI blankets

AFRSI blankets were developed following the assembly of *Columbia*. These blankets covered the sides of *Discovery's* forward fuselage, midfuselage, and aft fuselage; the portions of the top surface of the forward fuselage not faced with HRSI and LRSI tiles; and the aft quarter of the top surface, and the sides of the payload bay doors. In addition, the blankets were fitted on the sides of the OMS/RCS pods, the sides of the vertical stabilizer, the rudder/speed brake, and the top surfaces of the two outboard elevons.[567] The blankets were made by placing a core of pure silica felt in between a layer of silica fabric (outer side) and a layer of glass fabric; they were sewn together with pure silica thread, in a 1" grid, producing a quilted pattern. They were then coated with ceramic colloidal silica and high-purity silica to provide extra strength and erosion resistance. The blankets were generally 3' x 3', although the size and shape could vary considerably, and ranged in thickness from 0.45" to 0.95". AFRSI blankets could withstand temperatures up to 1,200 degrees F.[568]

Gap fillers

Discovery's tiles were installed with gaps in between the individual tiles, allowing for expansion and contraction as the temperature fluctuated; the gaps ranged from 0.028" to 0.2". Gap fillers were used to prevent plasma from reaching the vehicle's airframe.[569] The fillers were made of Nomex felt, were typically 0.75" wide, and had a thickness of 0.09", 0.115", or 0.16". Horse collar-shaped gap fillers were located between the RCC wing leading edge panels; each had a small sleeve designed to prevent hot gas from passing into the wing leading edges in case a tile was punctured.[570]

Flight Critical Systems

The orbiter had a variety of systems that were required for operation of the vehicle. These included the APU/hydraulics system; the caution and warning system; the communications system; the data processing system; the dedicated display systems; the electrical power system; the environmental control and life support system; the guidance, navigation, and control system; the landing/deceleration system; the main propulsion system; different mechanical systems; the orbital maneuvering system; and the reaction control system.[571]

---

replaced AFRSI blankets beginning with *Discovery*'s second OMDP from 1995 to 1996.

[567] AFRSI blankets were located in the same places on *Challenger*, *Atlantis*, and *Endeavour*. *Columbia* had limited AFRSI blankets, which were situated on most of the side surface of the payload bay doors, large sections of her midfuselage, on the OMS/RCS pods, and on the sides of her vertical stabilizer.

[568] Jenkins, *Space Shuttle*, 401; NASA, *Orbiter Thermal Protection System*, 5-6.

[569] NASA, *Orbiter Thermal Protection System*, 4.

[570] This was a modification made to the fillers in response to the *Columbia* accident. Boeing, *OV-103, Volume II*, 77-78.

[571] The main propulsion system, which primarily consists of the SSMEs and ET, will be discussed in Parts III and IV.

Auxiliary Power Unit/Hydraulic System

Discovery was designed to perform in a similar manner to a standard aircraft as it descended through the Earth's atmosphere for landing. The vehicle contained aerodynamic control surfaces, landing gear, and engines that required a hydraulic system in order to function properly. Power for the triple-redundant hydraulics system was provided by three APUs, as opposed to the orbiter's electrical power system. *Discovery's* APUs and hydraulics systems were similar to those found on large commercial aircraft.[572]

Functions and Operations

Discovery contained three functionally identical, but independent, APUs, which produced the power for one of the vehicle's three redundant hydraulic systems (Figure No. B-108).[573] In turn, the hydraulic systems provided hydraulic pressure to various hydraulic actuators throughout the vehicle (Figure B-109). These actuators were used for the following functions: gimbaling the three SSMEs to provide thrust vector control; actuating various control valves on the SSMEs; moving the orbiter aerosurfaces, such as the elevons, body flap, and the rudder/speed brake; retracting the ET/orbiter LO2 and LH2 disconnect umbilicals after the ET was jettisoned; deploying the main and nose landing gear systems; operating the main landing gear brakes and anti-skid features; and operating the nose wheel steering.[574]

Discovery's APU/hydraulic system operated during launch and landing procedures, in normal gravity and zero gravity atmospheres, and at varying temperatures. Prior to launch, the APU's fuel tank was loaded with roughly 333 pounds of anhydrous hydrazine, which provided about 90 minutes of operating time, and pressurized with gaseous nitrogen to 400 pounds per square inch (psi).[575] In addition, the tank for the water spray boiler was filled with around 138.5 pounds of water mixed with propylene glycol monomethyl ether in an azeotropic mixture (53 percent water/40 percent ether).[576] Other prelaunch preparations included pressurizing the gaseous nitrogen for the lube oil system to roughly 140 (pounds per square inch, absolute (psia); filling the tank in the APU injector water cooling system with around 9 pounds of water and pressurizing it to approximately 120 psi; and the water spray boiler pressure vessel was filled with roughly 0.77 pounds of nitrogen and pressurized to around 2,400 psi.[577]

At approximately 8 hours prior to launch, astronaut support personnel powered on the water spray boiler controllers, which in turn activated the water spray boiler system heaters to ensure

---

[572] Baker, *Manual*, 83-85.
[573] The APUs were considered "auxiliary" because they generated power separately from the fuel cells. USA, *APU/Hydraulic/Water Spray Boiler Systems Training Manual* (Houston: United Space Alliance, 2008), 2-1.
[574] USA, *APU*, 1-1; USA, *Crew Operations*, 2.1-1.
[575] Enough fuel was provided to support the nominal running time, and any defined launch abort mode. USA, APU, 2-5.
[576] USA, *APU*, 4-4.
[577] USA, *Crew Operations*, 2.1-5, 2.1-10, 2.1-13

that the boilers were ready to operate for launch. Roughly 30 minutes before liftoff, the pilot opened the boiler system's gaseous nitrogen supply valve to pressurize the storage tank. Approximately 6 minutes and 15 seconds before launch, the pilot began the prestart sequence for the APUs. This involved confirming that the water spray boiler system was operational, activating the APU controllers, and depressurizing the main hydraulic pump. Afterwards, the pilot opened the APU fuel tank valves and waited for the indication that the units were ready to start. The APUs were officially started at 5 minutes before launch, at which point the pressures of the main hydraulic pumps were monitored; if the pressure at each pump was not maintained greater than 2,800 psi after T-4:05, the launch was aborted.[578]

During launch, hydraulic fluid was fed to the main engine throttling valves, and the main engine thrust vector control actuators. Following main engine cutoff and ET jettison, fluid was fed to the ET umbilical plate retraction actuators.

The APUs and water spray boilers operated until roughly 13 minutes after launch, when the SSMEs were purged, dumped, and positioned for orbit operations, following which the fuel and water line heaters were activated to prevent freezing.[579] Approximately 2 hours after liftoff, the water spray boiler steam vent heaters were turned on for at least 1 ½ hours to remove any ice that accumulated in or around the vents. At the same time, the crew placed the hydraulic circulation pump switches into the automatic mode; this allowed the GPCs to maintain system temperatures and pressures. Roughly 6 hours after launch, the APU gas generator and fuel pump heaters were activated. The APU/hydraulics system then remained inactive until the day before the deorbit burn.[580]

While the vehicle was on orbit, the circulation pump was used to maintain accumulator pressure and for hydraulic thermal conditioning. The systems management software activated the pump if the hydraulic lines were cold and needed thermal conditioning, or if the hydraulic accumulator pressure had decayed and needed to be repressurized.[581] The circulation pump motor and inverter provided the primary source of heat to warm the hydraulic fluid, which flowed through and cooled the motor/inverter assembly. Additionally, a temperature-controlled bypass valve could direct the hydraulic fluid through a Freon/hydraulic heat exchanger to pick up the heat from the vehicle's Freon coolant loops, if the temperature at the heat exchanger inlet was less than 105 degrees F.[582] The valve directed the fluid around the exchanger if the temperature at the inlet was greater than 115 degrees F. In the case of pressurizing the accumulator, the flow from the high pressure pump was redirected through the accumulator until its pressure was above 2,563 psia, at

---

[578] USA, *Crew Operations*, 2.1-21; USA, APU, 5-2.
[579] USA, *Crew Operations*, 2.1-21, 5.2-4; USA, APU, 5-3.
[580] USA, *APU*, 5-3, 5-4; USA, *Crew Operations*, 2.1-21.
[581] USA, *APU*, 3-4.
[582] The Freon coolant loops were part of the ECLSS. They removed heat from other parts of the orbiter, and transferred it to the hydraulic fluid.

which point the flow was then combined with the low pressure output prior to being sent through the hydraulic lines.[583]

The redundant APU heaters were set to maintain temperatures between 55 and 65 degrees F. There was also a system of heaters for the fuel pump, gas generator valve module, and gas generator bed heater; these were also redundant. The temperatures for the fuel pump and gas generator valve module were maintained at 100 degrees F, while the temperature for the gas generator bed heater was maintained between 360 and 425 degrees F. The temperature of the gas generator ensured efficient APU startup through efficient catalytic reaction; the heaters were automatically deactivated at APU start. Each APU also had a heater system for the lube oil system lines; like the others, this system had a redundancy. The lube oil lines were maintained at a temperature between 55 and 65 degrees F.[584]

Each water boiler, water tank and steam vent was equipped with redundant electrical heaters to prevent freeze-up while on orbit. The boiler and tank heaters automatically cycled from on at 50 degrees F to off at 55 degrees F, while the steam vent heaters were activated approximately two hours before APU startup. They then cycled on at 150 degrees F and off at 175 degrees F.

On the day prior to reentry, one of the APUs was started to supply hydraulic pressure throughout the vehicle for the flight control system checkout; its associated water spray boiler was also activated. The checkout operation required approximately five minutes, after which the system was again shut down. Approximately 3 hours and 30 minutes before the deorbit burn, the water spray boiler steam vent heaters were activated and the hydraulic circulation pumps were shut down. Roughly 45 minutes before the deorbit burn, the crew pressurized the water spray boiler tanks, activated the APU controllers, and set the hydraulic pumps to low pressure. One of the APUs was started five minutes prior to the deorbit burn; the remaining two APUs were started roughly 30 minutes later, at 13 minutes before the entry interface. At the same time, all three hydraulic systems were pressurized to normal. If necessary, an automatic cycle sequence was performed to ensure warm hydraulic fluid was reaching the vehicle's aerosurface drive units.[585]

The APU/hydraulic system continued to operate until after the orbiter landed. Hydraulic fluid was sent to the elevons, the rudder/speed brake, the body flap, the landing gear deploy mechanism, the nose wheel steering, and the brakes. A hydraulic load test was sometimes performed after touchdown to test the response of the APU catalyst bed under high load conditions. Data from this test were used to extend the installed life of the APU (generally set at five flights) before an overhaul. After this test was finished, the SSME hydraulic isolation valves were opened in order to set the engines to their transport position. The APUs, hydraulic systems, and water spray boilers were then completely shut down.[586]

---

[583] USA, *APU*, 3-4, 3-6.
[584] USA, *APU*, 2-19.
[585] USA, *Crew Operations*, 2.1-22, 5.4-1, 5.4-3, 5.4-4; USA, *APU*, 5-5.
[586] USA, *Crew Operations*, 2.1-22, 5.5-1; USA, *APU*, 5-5.

System Description

Auxiliary Power Unit: The APU was a hydrazine-fueled, gas turbine-driven power unit that was fueled by liquid anhydrous hydrazine, which was different from the monomethyl hydrazine in the RCS. The three units were located behind the X_O = 1307 bulkhead, within the aft compartment and beneath the OMS pods (Figure Nos. B-108, B-110). Each unit consisted of a fuel tank, fuel tank valves, a fuel pump, fuel control valves, a gas generator bed and turbine, a digital controller, a lubricating oil system, an injector cooling system, heaters, an exhaust duct, a lube oil cooling system, and fuel/lube oil vents and drains. In addition, each was fitted with insulation and redundant electrical heater systems to prevent the fuel from freezing and to maintain the required lubricating oil viscosity.[587]

Each APU had its own 28”-diameter, spherical hydrazine fuel tank, with a 350 pound capacity. All three fuel tanks were mounted on supports, which were cantilevered from the interior surface of the aft fuselage; two on the port side and one on the starboard side. Each tank was fitted with a diaphragm, which separated the hydrazine from the gaseous nitrogen that was used to pressurize the fuel. In addition, each had hydrazine fill and drain service connections, as well as a gaseous nitrogen servicing connection. Pressurized gaseous nitrogen was used to expel the hydrazine fuel from the tank and into the fuel distribution system. At the tank outlet, the fuel traveled through a filter that removed any particulates. After the filter, the fuel was fed through two isolation valves in parallel before being routed to the APU fuel pump. These redundant valves allowed fuel to flow to the APU, or isolated the APU from the supply tank.[588]

The APU fuel pump was a fixed-displacement, gear-type pump that discharged fuel at approximately 1,400 to 1,500 psi, delivering hydrazine at a rate of 14 pounds per minute to the titanium gas generator bed. The fuel pump was mated to the gearbox; both were suspended partly inside a cavity that was designed to contain fuel and oil leaks. The cavity was divided into two sections to separate the fuel and the oil. A filter was located at the outlet of the pump, and a relief valve was included in the event that the filter became clogged. The pump was driven by the turbine, located downstream, by a shaft from the reduction gearbox.[589] Past the fuel pump were the primary and secondary fuel control valves, installed in series, which controlled the operating speed of the APU.[590] There were two speed control selections: normal and high. When operating normally, the primary valve pulsed to maintain a speed of roughly 74,000 revolutions per minute (rpm), while the secondary valve was set at full-open and attempted to control at 81,000 rpm. If the high speed mode was selected, the primary valve was set at full-open and attempted to control the speed at 83,000 rpm, and the secondary valve pulsed to control the speed at about 81,000 rpm. When the valve controlling the turbine speed was closed, the fuel was routed

[587] USA, *APU*, 1-1, 2-1, 2-3, 2-5; USA, *Crew Operations*, 2.1-1, 2.1-2.
[588] USA, *APU*, 2-5; USA, *Crew Operations*, 2.1-2. Since the turbine was not spinning at startup, the fuel bypassed the fuel pump by way of a startup bypass line and went directly into the gas generator. USA, *APU*, 2-7.
[589] USA, *Crew Operations*, 2.1-4.
[590] The valves were controlled by four identical speed control channels within the APU digital controller. At the unpowered state, the primary valve was open while the secondary valve was closed. USA, *APU*, 2-8.

through a bypass line back to the inlet of the pump. An automatic shutdown feature turned off the pump if the speed fell below 57,600 rpm or rose above 92,880 rpm.[591]

Downstream of the flow control valves, the hydrazine fuel was fed into a gas generator, at a rate of roughly 14 pounds per minute. The gas generator, which consisted of an injector and a bed of Shell 405 catalyst in a pressure chamber, was mounted within the APU exhaust chamber, allowing exhaust gas to cool the generator. The gas generator converted all incoming liquid fuel into a spray, which was then directed onto the catalyst bed. Upon contact with the Shell 405 catalyst, the hydrazine underwent an exothermic reaction, causing the fuel to decompose into a hot gas. The gas rapidly expanded and passed through the single-stage turbine that produced the power for the APU's associated hydraulic main pump; it also drove the APU fuel pump and lubrication oil pump. The turbine was a 5.5"-diameter, two-pass, impulse pressure-driven unit with a typical operating speed of 74,160 rpm. It had an exhaust system comprised of three 2.5" ducts, located near the root of the orbiter's vertical tail, two to the left and one to the right. Between the turbine and the hydraulic main pump was a speed reduction box used to reduce the shaft speed and increase the torque from the turbine prior to directing it to the hydraulic pump. Each APU was fitted with its own digital controller, which operated the APU within a controlled speed range and provided automatic shutdown protection for overspeed and underspeed situations.[592]

Each APU had a scavenger-type lubricant oil system with a fixed-displacement pump, which was necessary to lubricate the gearbox and fuel pump. The oil system pump was driven at about 12,215 rpm by the APU gearbox, with gaseous nitrogen used to pressurize the system. The gaseous nitrogen was kept in its own tank that held enough to repressurize the gearbox six or seven times.[593] A distribution line exited the lube pump and carried the oil through a water spray boiler for cooling, from which it was directed to the accumulators and gearbox. There were two accumulators used to maintain the pressure within the system, by allowing for thermal expansion of the oil and accommodating any gas initially trapped within the lube circuit.[594]

Each APU was also fitted with a gas generator injector water cooling system, which was only used when the normal cool-down period (180 minutes) was unavailable. A single, 9.4"-diameter, water tank served all three APUs; the tank held 8.5-9.5 pounds of water, sufficient for approximately six cooldowns, and was pressurized with gaseous nitrogen. Three supply lines extended from the tank, one for each APU; all spent water (in the form of steam) was exhausted into the aft fuselage. In addition, each APU was provided with a set of redundant heaters for the fuel tank, the fuel line, and the water line; they were set to maintain system temperatures

---

[591] USA, *Crew Operations*, 2.1-5; USA, *APU*, 2-8. Due to valve cycling, the actual fuel consumption of an operating APU was in the range of 1 to 4 pounds per minute.
[592] USA, *Crew Operations*, 2.1-5; USA, *APU*, 2-10, 2-11. The digital controller first flew in 1993, and was designed to provide increased fault tolerance so that no single component failure would cause a shutdown of the APU. USA, *APU*, 2-12.
[593] USA, *APU*, 2-12. Gearbox repressurizations were not uncommon, with certain APUs requiring more than others.
[594] USA, *Crew Operations*, 2.1-6.

between 55 and 65 degrees F. There was also a system of heaters for the fuel pump, gas generator valve module, and gas generator bed heater, which were maintained at a temperature of 100 degrees F (fuel pump and gas generator valve module) and between 360 and 425 degrees F (gas generator bed heater). There was also a heater system for the lube oil system lines; they were maintained between 55 and 65 degrees F.[595]

Hydraulic System: *Discovery* had three independent hydraulic systems for redundancy (Figure Nos. B-109, B-110). The systems were functionally identical, but differed in volume, routing, and subsystem support. Each system consisted of a main hydraulic pump, a hydraulic reservoir, a hydraulic bootstrap accumulator, an electrical circulation pump, a hydraulic/Freon heat exchanger, and electrical heaters. The pumps for all three systems were located in the vehicle's aft compartment, behind the X_O = 1307 bulkhead.[596] Hydraulic lines extended throughout the orbiter, typically within the equipment bay of the crew compartment, below the payload bay in the midfuselage, and at the bottom of the aft compartment.

The main hydraulic pump for each hydraulic system was a variable displacement type, which operated at roughly 3,900 rpm, providing up to 63 gallons of fluid per minute at 3,000 psia at normal speed, or up to 69.6 gallons per minute at 3,000 psia at high speed.[597] It was fitted with an electrically-operated depressurization valve to reduce both the pump outlet pressure and the torque at startup.[598] Just downstream of the pump was a filter module, which also contained a high-pressure relief valve and a pressure sensor.[599]

Each hydraulic system also contained a hydraulic reservoir, which had a capacity of 8 gallons and provided for thermal expansion and contraction of the fluid. In addition, the reservoir helped maintain positive head pressure at the main pump and the circulation pump inlets, as well as maintain leaks, if necessary. The pressure of the reservoir was maintained by an accumulator bootstrap mechanism, which was of a bellows type and was precharged with gaseous nitrogen. The accumulator was fitted with a 40:1 differential area piston that dampened pressure surges. It also provided pressure on the main pump inlet so that the system could be restarted in zero gravity.[600]

The circulation pump was comprised of two fixed-displacement, gear-type pumps arranged in parallel and driven by a single motor. One pump was a high pressure (2,500 psia)/low volume, and the other was low pressure (200 psia)/high volume. The former was used to maintain

---

[595] USA, *APU*, 2-17, 2-18, 2-19; USA, *Crew Operations*, 2.1-10, 2.1-11.
[596] USA, *APU*, 3-1, 3-2.
[597] USA, *Crew Operations*, 2.1-16, 2.1-17. This pump was similar to those on high performance aircraft. USA, *APU*, 3-2.
[598] USA, *APU*, 3-2; USA, *Crew Operations*, 2.1-16. A failure of this valve while the APU was not running would prevent the APU from being started, but a failure of the valve while the pump was running under normal pressure would go unnoticed.
[599] USA, *Crew Operations*, 2.1-17.
[600] USA, *APU*, 3-3; USA, *Crew Operations*, 2.1-19.

accumulator pressure while the hydraulic system was inactive on orbit, and the latter was used to circulate hydraulic fluid through the orbiter's hydraulic lines while the system was inactive in order to warm cold spots. A temperature-controlled bypass valve was included in the system to direct the hydraulic fluid through or around the Freon/hydraulic heat exchanger depending on its temperature. In addition, heaters were provided for those portions of the hydraulic lines that could not be warmed by fluid circulation while the system was inactive on orbit. The heaters were automatically controlled by thermostats, to maintain temperatures within a specified range.[601]

Water Spray Boiler: There were three identical, independent water spray boiler systems (Figure No. B-111) in *Discovery*, each of which corresponded to one of the APUs and was located within the aft fuselage. This system was used to cool both the lube oil system and the hydraulic system. Each water spray boiler had approximate dimensions of 45" in length, 31" in height, and 19" in width, and was comprised of electronic controllers, a water tank, and a boiler. The boilers helped to maintain the temperature of the lube oil at roughly 250 degrees F; the temperature of the hydraulic fluid was maintained between 210 and 220 degrees F. In addition, each system was equipped with redundant electrical heaters to prevent freeze-up while on orbit.[602]

Each boiler had two identical electronic controllers, which were powered by different buses; only one was used at a time. They were used to control the water spray and the hydraulic fluid bypass valve. In addition, they powered sensors used to compute the quantity of water remaining in their respective tank. The water supply tank was a positive-displacement, bellows-type, aluminum tank with a capacity of 142 pounds. The welded metal bellows separated the water, typically mixed with an antifreeze additive of propylene glycol monomethyl ether, from the gaseous nitrogen used to pressurize the tank. A separate gaseous nitrogen pressure vessel, with a 6"-diameter, stored the nitrogen until use. The feed line extended from the tank and split into two parallel lines prior to reaching the boiler; one of the lines was used to spray the hydraulic fluid line, through three spray bars, and the other to spray the lube oil line, through two spray bars.[603] The spray bars were flush with the internal surface of the boiler, which itself encased the loops for the hydraulic fluid and the oil lubricant.

As the water boiled off, the lube oil and hydraulic fluid were cooled. The steam produced by each boiler was vented out of an exhaust duct located on the top surface of the vehicle, on the starboard side of the vertical stabilizer. There were two controllers, powered by different buses; only one was used at a time. Each controlled the water spray and the hydraulic fluid bypass valve; they were identical.[604] The hydraulic fluid was passed through the water spray boiler three times, while the lube oil passed through only twice. As the hydraulic fluid and lube oil passed through the boiler, they were sprayed with water from three spray bars and two spray bars,

---

[601] USA, *APU*, 3-4, 3-6, 3-7; USA, *Crew Operations*, 2.1-19, 2.1-21.
[602] USA, *APU*, 4-1, 4-8; USA, *Crew Operations*, 2.1-12, 2.1-16.
[603] USA, *APU*, 4-3, 4-4; USA, *Crew Operations*, 2.1-12, 2.1-13.
[604] USA, *APU*, 4-4, 4-7.

respectively. The bars for each were controlled independently through their own valve. The water spray boiler helped to maintain the temperature of the hydraulic fluid between 210 and 220 degrees F; the temperature of the lube oil was maintained at roughly 250 degrees F.[605]

Caution and Warning System

Discovery was fitted with a caution and warning system (CWS), which alerted the crew of any hazardous conditions, or to situations that required time-critical procedures (under 5 minutes) to correct. The system interfaced with nearly every other vehicle system, including the APU/hydraulics, data processing, ECLSS, electrical power system, flight control, guidance and navigation, main propulsion system (MPS), RCS, OMS, and the mission payloads. Four alarm classes constituted the CWS: Class 1 (emergency), Class 2 (caution and warning), Class 3 (alert), and Class 0 (limit-sensing).[606] The system consisted of software and electronics that provided the crew with visual and/or aural cues, dependent upon the class of the malfunction.

There were five types of visual cues associated with the CWS. Most were incorporated within the control panels on the flight deck. There was a red master alarm light on the F2 and F4 panels in the forward flight deck, and the A7 panel on the flight aft deck (see Figure Nos. B-75 and B-76 for flight deck panel locations). The forward flight deck also contained a forty-light array on panel F7 (Figure No. B-112) and a blue systems management light; fault messages generated by the GPCs appeared on the dedicated displays. In addition, a 120-light array was situated on panel R13U in the mission station on the flight deck. On the middeck, there was a red master alarm light on panel MO52J. Aural cues were sent to the communications system for distribution to flight crew headsets or speaker boxes.[607]

Class 1 consisted only of the most severe emergencies: smoke detection/fire suppression and rapid cabin depressurization. Class 1 was strictly a hardware system that included hard-wired sensors, which monitored the designated parameters and issued all alarms.[608] Both smoke detection and fire suppression capabilities were provided within the crew cabin avionics bays, and within the crew cabin proper. The smoke detection subsystem was comprised of ionization detection elements, which sensed the levels of smoke concentration or the rate of concentration change. The normal parameters for the smoke detection system were 300 to 400 micrograms per cubic meter. If a detection element sensed an out-of-parameter condition, the subsystem would

[605] USA, *Crew Operations*, 2.1-12.
[606] USA, *Crew Operations*, 2.2-1, 2.2-2, 2.2-5; Jeffrey W. McCandless, Robert S. McCann and Bruce R. Hilty, "Upgrades to the Caution and Warning System of the Space Shuttle," Paper presented at the Proceedings of the Human Factors and Ergonomics Society 47th Annual Meeting, Santa Monica, CA, October 13, 2003, 17-18, http://human-factors.arc.nasa.gov/publications/20051025103849_McCandless_HFES_2003%202.pdf.
[607] USA, *Crew Operations*, 2.2-1.
[608] A hardware only system was one in which input was not processed by the vehicle's multiplexers/demultiplexers or other software systems. USA, *Crew Operations*, 2.2-2.

illuminate the applicable lights on different panels, and a siren, similar to those on typical emergency vehicles, was activated.[609]

The fire suppression subsystem contained equipment specifically for the crew cabin avionics bays, as well as the cabin's habitable areas. Each of the three avionics bays had one permanently-mounted Halon 1301 extinguisher bottle, which measured roughly 8" in length and 4.25" in diameter, and contained approximately 3.8 pounds of Halon.[610] Each had a switch to arm the bottle, and a pushbutton to discharge the Halon. The discharge created a Halon concentration of 7.5 to 9.5 percent that provided protection for roughly seventy-two hours. The habitable area of the crew cabin was fitted with three Halon 1301, hand-held fire extinguishers; two were located on the middeck, one above the airlock hatch and the other above the main crew hatch, and the third was on the flight deck, within the pilot's station. These hand-held extinguishers were operated by inserting their tapered nozzle into the fire hole port located on the affected display/control panel, and then depressing the actuating mechanism for 15 seconds. They could also be used as a backup for the extinguishers in the avionics bays.[611]

Rapid cabin depressurization was the second Class 1 alarm situation. This subsystem consisted of a cabin pressurization rate detector that sensed the rate at which the atmospheric pressure within the crew compartment was changing. If air was leaking from the cabin at a rate much higher than normal (rapid depressurization), the klaxon, a short, repeating tone that was readily distinguishable from other CWS tones, sounded. At the same time, the four Master Alarm pushbuttons were lit. In addition to rapid cabin depressurization, if there was a decrease in pressure greater than or equal to 0.12 pounds per square inch per minute, a Class 3 alert sounded; if the change in pressure versus the change in time decreased at a rate of -0.08 pounds per square inch per minute or greater, an alarm was issued.[612]

Class 2 incorporated the largest set of malfunctions, which were considered not as critical as Class 1, but still potentially life-threatening.[613] Class 2 consisted of two subclasses, the primary CWS, which was comprised of a hardware system, and a backup CWS, which was comprised of a software system. The primary CWS monitored up to 120 parameters through sensors located throughout the orbiter's critical systems, and had three modes of operation: ascent, normal, and acknowledge. Under the normal setting, the CWS received its input from transducers through either signal conditioners or flight forward multiplexer/demultiplexers; all baseline limit values

---

[609] USA, *Crew Operations*, 2.2-2, 2.2-5, 2.2-6. An out-of-parameter condition was defined as a concentration of 2,000 (+/- 200) micrograms per cubic meter for at least 5 seconds, and/or a rate of smoke increase of 22 micrograms per cubic meter per second for eight consecutive counts in 20 seconds.
[610] Halon 1301, or bromotrifluoromethane, is an organic halide introduced in the 1960s as a gaseous fire suppression agent for use around valuable materials, such as aircraft and computer mainframes. "Bromotrifluoromethane," *wikipedia.org*, last modified April 3, 2011.
[611] USA, *Crew Operations*, 2.2-6, 2.2-7, 2.2-9.
[612] USA, *Crew Operations*, 2.2-11. The normal change in pressure versus change in time rate was 0 psi per minute.
[613] McCandless, et. al., "Caution and Warning System," 17-18.

were stored within the CWS electronics unit, which was located within Avionics Bay 3.[614] When a primary CWS warning was issued, the appropriate light on the panel F7 array and all four Master Alarm indicators were illuminated, and a tone sounded. During the ascent mode of operation, the system operated the same as it did in the normal mode, except that the Master Alarm indicator on panel F2 (commander's area of the flight deck) did not illuminate. Similarly, in the acknowledge mode of operation, the annunciator matrix on panel F7 did not illuminate, unless the Master Alarm pushbutton on panel F2 (commander's area) or panel F4 (pilot's area) was depressed.[615]

The backup CWS was part of the orbiter's systems management fault detection and annunciation, GNC, and backup flight system software programs. If the backup CWS sensed an out-of-tolerance condition, it caused the four Master Alarm lights and the Backup C/W Alarm, on panel F7 on the flight deck, to illuminate, and displayed a message on the fault message line and fault summary page. It also activated the aural master alarm for Class 2.[616]

Class 3, the Alert system, was a purely software system that was operated by the orbiter's systems management software; these alerts were generally of lower priority than Class 1 or Class 2 alarms. The primary purpose of the Class 3 system was to inform the crew of a situation that could lead to a Class 2 alarm, or a condition that required a long procedure (more than 5 minutes) to correct. If the system detected that a specific parameter exceeded its limits, the blue systems management light was illuminated, and an alert tone, typically a steady tone of a predefined duration, was sounded. In addition, a fault message was displayed on both the fault message line and the fault summary page. The out-of-limits conditions were sensed by both the GNC system and the systems management software.[617]

The CWS also contained a Class 0, or Limit Sensing system, which provided visual cues only. These cues appeared on the data processing system display, and consisted of up and down arrows next to the monitored parameter(s). The up arrow indicated than the upper limit for a particular parameter had been exceeded, while the down arrow indicated that the lower limit for a parameter had been met or exceeded. The down arrow was also used to indicate a state that did not agree with the nominal state (for example: when a fan that was normally on, was off).[618]

---

[614] Nearly all of the baseline limit values were set to be identical to those programmed into the backup CWS, but were changeable through switches on panel R13U on the flight deck. If power was lost and recovered, the limits returned to their original values. USA, *Crew Operations*, 2.2-3, 2.2-12.
[615] USA, *Crew Operations*, 2.2-12.
[616] USA, *Crew Operations*, 2.2-3, 2.2-4.
[617] USA, *Crew Operations*, 2.2-5.
[618] USA, *Crew Operations*, 2.2-5.

Communications System

Functions and Operations

The orbiter's communications system provided a variety of data paths between the orbiter and Mission Control. These included two-way internal and extravehicular voice and data links, and two-way audio, telemetry, and video communications. In addition, the system provided two-way data links between the vehicle and the ISS. The communications system could handle six different types of data: telemetry (operating conditions and configurations; systems, payloads and crew biotelemetry measurements); command (functional or configuration changes); rendezvous and tracking (onboard radar/communications system for tracking/performing rendezvous with orbiting satellites/spacecraft); video; voice; and documentation (printed data from the thermal impulse printer system). The information was passed directly between onboard equipment through wires, or between the vehicle and the ground by radio frequency links. All commands that were sent to the orbiter from the ground were routed to the onboard GPCs through the network signal processor and associated flight forward multiplexer/demultiplexer (MDM).[619]

Radio frequency communication took place directly with the ground sites, through the space flight tracking and data network (STDN) ground stations, or indirectly, through a TDRS system (TDRSS).[620] For direct communications, transmissions from the ground to the orbiter were referred to as uplinks, while signals from the orbiter to the ground were called downlinks. For indirect communications, signals from the ground to the orbiter were referred to as forward links and transmissions from the orbiter to the ground were called return links.[621] The TDRSS network provided most of the communications relays between the orbiter and Mission Control. It was comprised of nine satellites, which were located approximately 130 degrees apart, in geosynchronous orbit. The satellites were supported by the White Sands Ground Terminal and the Second TDRS Ground Terminal (both near White Sands, New Mexico).

System Description

The communications system was divided into several smaller systems, which included the S-band PM, the S-band FM, the Ku-band, the UHF simplex, the space-to-space orbiter radio, the payload communications, the audio, and the closed-circuit television.[622] The first four systems were used to transfer information between the orbiter and the ground. They provided near-

[619] USA, *Crew Operations*, 2.4-1, 2.4-2.
[620] For all military (DoD) missions, direct communications took place through the Air Force Satellite Control Facility remote tracking station sites, also known as space-ground link system ground stations. USA, *Crew Operations*, 2.4-1.
[621] This indirect terminology was also used to describe the communication links between a detached payload and the orbiter. Those from the orbiter to the payload were forward links, and those from the payload to the orbiter were return links. USA, *DPS Overview Workbook* (Houston: United Space Alliance, 2006), 1-1.
[622] A description of the closed circuit television system begins on page 210.

continuous communication, except for the zone of exclusion and the reentry phase of the mission.[623] The space-to-space orbiter radio was used to provide communications between the orbiter and the ISS, or the orbiter and the EMU, and the payload communication system provided data transfer between the orbiter and the payloads. The audio system was used to provide analog voice connection between the orbiter and Mission Control (or the Payload Operations Control Center).[624]

The **S-band PM system** (see Figure Nos. B-65 through B-68 for antenna locations) provided two-way communication between the vehicle and the ground, through either the STDN stations or TDRSS satellites. This system relied solely on radio frequency signals, which required a "line-of-sight" between the transmitting and receiving antennas. The TDRSS network allowed for about 80 percent coverage. If necessary (i.e., during a critical phase, such as the deorbit burn), a TDRS Z satellite could be scheduled to provide 100 percent communication coverage. It provided channels for commands from the ground to the orbiter; two-way voice communications between the ground and the orbiter; real-time orbiter/payload telemetry data from the vehicle to the ground; turnaround tone ranging that aided in tracking the orbiter; and two-way Doppler tracking, also used to track the orbiter.[625]

The S-band PM system contained four antennas, two of which were situated on the top of the forward fuselage and two on the bottom of the forward fuselage. Each antenna was a dual-beam unit that could look forward or aft without any physical movement. All four were capable of transmitting information to a STDN ground station or a TDRS; the specific antenna used was based on the computed line-of-sight. A dual S-band preamplifier was used to strengthen transmission signals. There was also a power amplifier to further strengthen the signals, if required.[626] The S-band PM system also contained redundant transponders, which functioned as multipurpose, multimode transmitters and receivers. The transponders could transmit signals, receive signals, or do both simultaneously. The transponders sent all forward link commands to the network signal processor, and received return link data from the network signal processor. The transponders also handled two-way Doppler and two-way tone ranging signals, both of which were used by the ground stations to track the orbiter.[627]

The transponders worked with one of two redundant network signal processors, which either received commands from the transponder or transmitted data to the transponder. For the transmission of data, the processor received one or two analog voice channels from the orbiter's systems, and converted them to digital signals. The processor then multiplexed them with telemetry data from the pulse code modulation master unit, and sent the composite signal to the transponder, which sent the signal to the ground. For forward links, this process was reversed.

---

[623] The zone of exclusion was an area where the orbiter was not within the line of site of either TDRSS satellite; geographically the zone was over the Indian Ocean region. USA, *Crew Operations*, 2.4-2.
[624] USA, *Crew Operations*, 2.4-1.
[625] USA, *Crew Operations*, 2.4-2, 2.4-4.
[626] There were two preamplifiers and two power amplifiers for redundancy.
[627] USA, *Crew Operations*, 2.4-7, 2.4-8.

All S-band phase modulation communications were capable of being encrypted (and decrypted) as a means of security for operational data.[628]

The **S-band FM system** (see Figure Nos. B-65 through B-68 for antenna locations) was used exclusively to downlink telemetry data from as many as seven different sources, although only one source could be downloaded at a time. The seven sources of data were as follows: real-time SSME data from the engine interface units during launch; real-time video; solid state recorder dumps of high- or low-data-rate telemetry; payload analog data; payload digital data; real time or playback DoD data. In addition, these activities were only available when there was a line of sight between the orbiter and a STDN or USAF ground station. There were two redundant S-band FM transmitters on the orbiter, both of which were tuned to 2,250-Megahertz (MHz); only one could be used at a time. There were two S-band FM antennas on the outer skin of the vehicle's forward fuselage: one on the top surface and one on the bottom surface. Each was hemispherical, and covered with reusable TPS. Either antenna was selected for use based on the computed line of sight between the orbiter and the ground stations.[629]

The **Ku-band system** could be used as a communications system or a tracking/rendezvous radar system (both functions could not occur simultaneously); it was operated through the TDRSS. The Ku-band antenna for this system was located within the orbiter's payload bay (Figure No. B-113); thus, it was not operational until the vehicle was in orbit and the payload bay doors were opened. The antenna was stored on the starboard sill longeron; when deployed, it was angled 113 degrees counterclockwise from its stowage position. Once the antenna was deployed and activated, the vehicle's network signal processor directed the return link data stream to both the Ku-band signal processor and the S-band PM transponder, both of which transmitted data to the TDRS within the orbiter's line-of-sight.[630]

The Ku-band system was capable of handling more data than the S-band systems; it could transmit three channels of data at a time, either as forward or return links. There were two communications modes for forward and return links, each consisting of three channels. In all cases, the three channels of data were sent to the Ku-band signal processor, where they were layered with the return link. The signal was then sent to the deployed electronics assembly (which contained the transmitter), from which it was transmitted through the Ku-band antenna to the appropriate TDRS.[631]

Ku-band system interfacing between the orbiter and the TDRS was through the Ku-band deployed assembly, which consisted of a two-axis, gimbal-mounted, high-gain antenna; an integral gyro assembly; and a radio frequency electronics box. The assembly was mounted to the starboard sill longeron within the payload bay; gimbal motors were used to position the antenna

---

[628] USA, *Crew Operations*, 2.4-9.
[629] USA, *Crew Operations*, 2.4-10, 2.4-11.
[630] USA, *Crew Operations*, 2.4-13.
[631] USA, *Crew Operations*, 2.4-13, 2.4-15.

and rate sensors were used to determine how fast the antenna was moving. When stowed in the payload bay, the assembly was 7' long and 1' wide; the graphite epoxy parabolic antenna dish had a diameter of 3'. The dish was edge-mounted on a two-axis gimbal, which provided roll and pitch movements; it could be steered manually or automatically. Ground controllers sometimes "masked" the antenna, by inhibiting the RF carrier, to provide protection from Ku radiation for payloads, EVAs, and the ISS. This was accomplished by either inhibiting the transmitter when a certain beta gimbal angle was exceeded, or by inhibiting the transmitter in a specialized zone, defined by elevation and azimuth angles relative to the orbiter's axes.[632]

The **payload communication system** was used to transfer information between the orbiter and the payloads. It supported both cabled and radio frequency communications, and was used to activate, check out, and deactivate attached and detached payloads. Its basic components were the payload interrogator, the payload signal processor, the payload data interleaver, and the pulse code modulation master unit; all of which were located in the forward avionics bays. Commands to the system were routed through the ground control interface logic controller from the payload MDMs.[633]

The payload interrogator was a transmitter/receiver/transponder unit through which the orbiter and a detached payload communicated with one another. The interrogator transmitted commands to, and received telemetry from, NASA payloads through the payload antenna, and then routed the telemetry directly to the Ku-band system for transmission to the ground and to the payload signal processor. The payload signal processor served as the interface between the flight crew and the payload, or between the ground and the payload. Attached payloads were connected to the payload data interleaver through interfaces on the payload patch panel. The payload data interleaver allowed the payload communication system to interface with the rest of the orbiter communication systems and computers. It was capable of receiving up to six inputs from attached or detached payloads, as well as one ground support equipment input. The interleaver sent the payload telemetry to the pulse code modulation master unit so it could be accessed by the GPCs for display, or combined with other orbiter telemetry for transmission to ground control.[634]

The **UHF system** (see Figure Nos. B-65 through B-68 for antenna locations) was typically used as a back-up for the S-band PM during ascent and entry operations for voice communications between the crew and the ground. It also served as the primary system for EVA communications. In addition, the UHF system could be used with the TACAN system on approach and landing operations, as well as with the Shuttle Training Aircraft during launch/landing. The UHF signals were routed through one antenna located on the bottom of the forward fuselage; a second antenna was located within the airlock.[635]

---

[632] USA, *Crew Operations*, 2.4-15 through 2.4-17.
[633] USA, *Crew Operations*, 2.4-21, 2.4-22.
[634] USA, *Crew Operations*, 2.4-22, 2.4-23.
[635] USA, *Crew Operations*, 2.4-23.

Also a part of the communications system was the **audio distribution system**, which was used to route all audio signals throughout the orbiter. It also provided the means for the crew members to communicate with each other and with external locations (such as Mission Control). The major components of this system were the audio central control unit, the audio terminal unit, the speaker units, the audio center panel, loose communications equipment, and crew communications umbilical jacks. The audio system had eight loops for routing the communications signals; different loops were designated for specific communications types (such as vehicle to Mission Control, or crew member to crew member).

There were two, redundant audio central control units located in the forward avionics bay of the middeck; only one was used at a given time. The control unit gathered and routed audio signals throughout the orbiter. Its circuitry could also activate signals from the launch umbilical connections to communicate with the Launch Control Center at KSC. There were six audio terminal units positioned throughout the crew compartment, four on the flight deck, one in the middeck, and one in the airlock. Each terminal unit had a control panel, which was used to select and control the volume of each audio loop. The audio terminal units were also connected to a paging system, which allowed one unit to transmit audio signals to all other audio terminal units, the space-to-space orbiter radio, and the ISS.[636]

There were two speaker units on the orbiter, one in the flight deck and one in the middeck. Each speaker unit was fitted with two speakers; the top speaker was for audio signals, while the bottom speaker was dedicated to caution and warning tones. There was one audio center panel, located on the aft flight deck. The panel was fitted with switches that sent digital impulses to the audio central control unit, enabling communications.[637] Loose communications equipment included small, stowable items, such as headsets, cables, and microphones. It also included the launch and entry helmet, which each crewmember wore during launch and entry procedures.[638] Crew communications umbilical jacks were headset plugs located on various control panels throughout the crew cabin.

Another aspect of the communications system was the **operational instrumentation system**, which monitored more than 3,000 parameters. This system consisted of transducers, fourteen dedicated signal conditioners, seven MDMs, two pulse code modulation master units, two recorders, master timing equipment, and onboard checkout equipment. These components worked together to sense, acquire, condition, digitize, format, and distribute data for display, telemetry, recording, and checkout. With the exception of sensors and dedicated signal conditioners, which were positioned throughout the orbiter as required, the operational instrumentation system was located within the forward and aft avionics bays.[639]

---

[636] USA, *Crew Operations*, 2.4-28, 2.4-30, 2.4-33.
[637] USA, *Crew Operations*, 2.4-34.
[638] USA, *Crew Operations*, 2.4-35 through 2.4-37.
[639] USA, *Crew Operations*, 2.4-38-2.4-40.

Data Processing System

Discovery's data processing system (DPS) was considered "the heart of the space shuttle orbiter." This system directly or indirectly controlled the majority of the vehicle's systems (Figure No. B-114). The DPS was operated through five GPCs; four of the computers were loaded with the primary avionics software system (PASS), whereas the fifth contained the backup flight system (BFS).[640] The software accommodated nearly all phases of a mission, including orbiter checkout, prelaunch and final countdown operations, turnaround activities, control/monitoring during launch, ascent, on-orbit, entry and landing activities, and aborts or other contingency operations. It performed various GNC tasks, which were necessary to fly the vehicle, and provided the entire shuttle vehicle with computerized monitoring and control. In addition, the system managed and filtered orbiter system data (also known as telemetry) for transmission to Mission Control, and allowed Mission Control to remotely command many of the orbiter's systems.[641]

Functions and Operations

The DPS had a variety of functions that expanded across all phases of a mission, as follows:

- Supporting the guidance, navigation, and control of the vehicle, including calculation of trajectories, SSME burn data, and vehicle attitude control data;
- Monitoring and controlling the vehicle subsystems, such as the electrical power system and the environmental control and life support system;
- Processing vehicle data for use by the flight crew and for transmission to the ground controllers, as well as allowing remote control of some of the vehicle's systems;
- Checking data transmission errors and crew control input errors, and supporting the annunciation of vehicle system failures and out-of-tolerance system conditions;
- Supporting payloads with flight crew or software interface for activation, deployment, deactivation, and retrieval; and
- Processing rendezvous, tracking, and data transmissions between payloads and ground controllers.[642]

During the ascent phase of the mission, the four GPCs running the PASS were responsible for flying the vehicle; they performed all GNC functions simultaneously and redundantly. The fifth GPC, loaded with the BFS, "listened" to the other four computers so that in the event of a failure in the PASS, the BFS computer could continue to control the vehicle from where the PASS left off. In addition, the BFS computer performed all systems management functions during ascent, while the PASS computers were "preoccupied" with GNC operations.[643]

---

[640] USA, *Crew Operations*, 2.6-2.
[641] USA, *DPS Overview*, 1-1.
[642] USA, *Crew Operations*, 2.6-1.
[643] USA, *Crew Operations*, 2.6-22; USA, *DPS Overview*, 2-1, 2-2.

Once *Discovery* reached orbit, the PASS GPCs, which handled all on-orbit activities, were loaded with new software. During this phase of the mission, any failure of the PASS was considered non-life threatening; therefore, the BFS was no longer required and the computer was put into sleep mode. Throughout the orbit phase of the mission, different operational sequence software was loaded into the GPC from the modular memory unit as required. The typical on-orbit configuration assigned one to three PASS GPCs the responsibility of flying the orbiter, and one PASS GPC the task of performing all systems management tasks, as well as some payload activities. Any PASS GPC not being used for GNC was also loaded with orbit GNC software, but kept in sleep mode, until their use was required.[644]

Approximately 2 hours prior to the deorbit burn, the BFS computer was restarted, and all five GPCs were configured with the operational sequence for reentry and landing. As with launch and ascent procedures, the four computers with PASS conducted all GNC operations, while the BFS computer performed all systems management functions and monitored the status of the PASS.[645]

System Description

The vehicle contained five identical **GPCs** that allowed for redundant data processing and transfer; all five computers were IBM AP-101S with semiconductor memories. Four of the computers were loaded with the PASS, which was developed by IBM. These computers were used throughout the entire mission to fly the vehicle; provide life support, thermal control, and communications; and to assist with payload activities.[646] The fifth computer was loaded with the BFS software, which was developed by Rockwell International. This computer and software system was designed to take control of the vehicle if the PASS failed, or if other multiple failures caused a loss of vehicle control; the BFS was only capable of controlling basic flight and operation functions.[647] Each computer had an alphanumeric designation, GPC 1, GPC 2, GPC 3, GPC 4, or GPC 5. GPCs 1 and 4 were located in Avionics Bay 1 (forward middeck), GPCs 2 and 5 were located in Avionics Bay 2 (forward middeck), and GPC 3 was located in Avionics Bay 3 (aft middeck). GPC 5 was typically the computer provided with the BFS software, although any of the five computers could be loaded with the software.[648] Each computer was stored in a 19.55”-long, 10.2”-wide, and 7.62”-high avionics box.

Each GPC had a central processing unit and an input/output processor. The central processing unit controlled access to the computer’s main memory for data storage and software execution. It was also used to execute instructions to control vehicle systems and manipulate data. The input/output processor was used to format and transmit commands to vehicle systems, receive and validate response data from the vehicle systems, maintain the status of interfaces with the

[644] USA, *Crew Operations*, 2.6-20.
[645] USA, *Crew Operations*, 2.6-20, 5.4-2; USA, *DPS Overview*, 2-2.
[646] USA, *Crew Operations*, 2.6-2. 2.6-20; USA, *DPS Overview*, 2-1.
[647] USA, *Crew Operations*, 2.6-2; USA, *DPS Overview*, 2-1. NASA purposefully had the BFS designed by a different company to protect against a generic software flaw in the PASS.
[648] USA, *Crew Operations*, 2.6-3, 2.6-22.

associated central processing unit and the other GPCs, and interface with the twenty-four data buses and their processors. Each GPC also contained a timing oscillator that regulated operations between the computer's internal components, and kept track of Greenwich Mean Time and/or Mission Elapsed Time (MET) (as a backup to the master timing unit). The computer with the BFS also had a watchdog timer, which ensured that the computer was functioning properly.[649]

There were three modes of operation for the GPCs: redundant set, common set, and simplex. During redundant set operations, two or more of the GPCs concurrently received the same inputs, executed the same GNC software, and produced the same outputs. During common set operations, two or more GPCs communicated with one another while they performed their individual tasks, although the tasks could be the same. The simplex mode was used primarily for systems management and major payload functions. In addition, each of the four GPCs with the PASS software operated in synchronized steps and cross-checked their results with one another hundreds of times per second. If any of them failed to meet a synchronization point, the other computers voted it out of the redundant set, and initiated a fault message on the GPC status matrix and illuminated the master alarm.[650]

Aside from the five GPCs, the DPS contained two modular mass memory units, twenty-four serial digital data buses, twenty-four MDMs, three SSME interface units, the MEDS, two data bus isolation amplifiers, two master event controllers, and one master timing unit (Figure No. B-114).

The two **modular memory units** contained all of the software for the GPCs. Each consisted of a solid state recorder and a solid state mass memory storage device for GPC software and orbiter systems data. Each had approximate dimensions of 20" in length, 12" in width, and 7.7" in height, used 83 watts of power, and was located in the forward avionics bays on the middeck. Each unit was connected to all five GPCs, but was connected to only one mass memory data bus through a multiplexer interface adapter. The modular memory units contained eight memory configurations that corresponded to different phases of a mission; each memory configuration contained the functional data for the activities executed during that specific phase.[651] Critical programs and data were loaded into both memory units and protected from erasure. Besides storing the basic flight software, the modular memory units stored background formats and codes for some of the dedicated displays, and periodically saved select data in case of a GPC failure.[652]

Discovery's DPS contained twenty-eight **data buses** that supported the transfer of serial data commands and data between the five GPCs and the vehicle's systems. The data buses were

---

[649] USA, *Crew Operations*, 2.6-3. The four GPCs with the PASS did not need to use this function because they were synchronized with one another.
[650] USA, *Crew Operations*, 2.6-5, 2.6-6.
[651] This arrangement was necessary because the GPCs had limited memory space. All of the software was therefore stored in the modular memory units and transferred to the GPCs at specified times in the mission. USA, *Crew Operations*, 2.6-13; USA, *DPS Overview*, 2-2.
[652] USA, *Crew Operations*, 2.6-13.

divided into seven functional groups: flight-critical data buses, payload data buses, launch data buses, mass memory data buses, display/keyboard data buses, instrumentation/pulse code modulation master unit buses, and the intercomputer communication data buses. The eight flight-critical data buses connected the GPCs to the flight-critical MDMs, integrated display processors, head-up displays, engine interface units, and master events controllers. There were two payload data buses that interfaced the GPCs to the two payload MDMs. The MDMs, in turn, were connected to the orbiter systems and payloads, and sometimes with other payload equipment. The two launch data buses were used to interconnect the GPCs, the ground support equipment, the launch processing system, the three launch MDMs, and the two left and two right SRB MDMs. One of the launch data buses was also interfaced with the RMS while on orbit.[653]

There were two **mass memory data buses** used to connect the GPCs to the modular memory units. Each bus was connected to all five GPCs but only one of the memory units. The four display/keyboard data buses were used to interface the integrated display processors with the GPCs. Similar to the mass memory data buses, each display/keyboard data bus was connected to one integrated display processor and all five computers. There were five instrumentation/pulse code modulation master unit buses, each of which was connected to one GPC and two pulse code modulation master units. The five intercomputer communication data buses allowed the PASS computers to exchange information with each other. The exchanged data included input/output errors, fault messages, GPC status matrix data, integrated display processor major function switch settings, GPC/CRT keyboard entries, resident GPC memory configuration, memory configuration table, operational sequences, master timing unit data, time, internal GPC time, system-level display information, uplink data, and state vectors.[654]

The twenty-four **MDMs** converted and formatted serial digital GPC commands into separate and parallel digital and analog commands for the different vehicle hardware systems (demultiplex), and vice versa (multiplex). Each MDM was 13” x 11” x 7”, weighed about 38.5 pounds, and was redundantly powered by two main buses. Each MDM was fitted with two redundant multiplexer interface adapters; each adapter was connected to a separate data bus. Each MDM was also hardwired to a specific vehicle system. Four of the MDMs were connected to the SRBs, two per booster; twenty of the MDMs were onboard the orbiter. Thirteen of the orbiter’s MDMs were considered part of the DPS and were connected to the GPCs. There were four flight-critical forward MDMs, two payload MDMs, one launch forward MDM, and one launch mid MDM, which were in the forward avionics bays, and four flight-critical aft MDMs, and one launch aft MDM, located within the aft avionics bays. Seven of the orbiter’s MDMs were considered part of the vehicle instrumentation system; these MDMs sent vehicle instrumentation data to the pulse code modulation master units. Four of the vehicle instrumentation MDMs were located in the forward avionics bays, and three were in the aft avionics bays.[655]

---

[653] USA, *Crew Operations*, 2.6-8, 2.6-9.
[654] USA, *Crew Operations*, 2.6-9, 2.6-10, 2.6-11.
[655] USA, *Crew Operations*, 2.6-11.

The **MEDS** allowed onboard monitoring of orbiter systems, computer software processing, and manual control for flight crew data and software manipulation.[656] The crewmembers could use the MEDS to control vehicle system operations, alter system configurations, change data or instructions in the GPC main memory, change memory configurations corresponding to different mission phases, respond to error messages and alarms, request special programs to perform specific tasks, run through operational sequences for each mission phase, and request specific displays. The system consisted of four different types of hardware: integrated display processors, multifunction display units, analog-to-digital converters, and keyboard units. These components communicated with the GPCs through the display/keyboard data buses.[657]

The four integrated display processors served as the interface between the MEDS and the GPCs. The processors formatted data from the computers and the analog-to-digital converters, for display on the MEDS display units. They could also accept operator inputs from switches, edgekeys, and keyboards, as well as monitor their own status and the status of other MEDS line replaceable units. The processors were located in the forward cockpit; two beneath panels to the left of the commander and two beneath panels to the right of the pilot; they were able to be swapped during a flight, if necessary. Each had its own dedicated data bus that connected it to the display units and to the two analog-to-digital converters.[658]

There were eleven multifunction display units, each of which was a full color, flat panel, 6.7”-square, active matrix liquid crystal display. The unit’s primary function was to drive the various color displays on the multifunction display units (MDUs), which were designed to ensure readability in the harsh lighting conditions. Each display was fitted with six edgekeys below the screen, which were used to navigate the MEDS menu system, and to perform MEDS-specific activities. On either side of the edgekeys were a brightness control knob and an on/off switch. Nine of the multifunction display units were located on the forward cockpit; one was located on the mission station, and one was located on the aft station. All but three of the MDUs were connected to two integrated display processors, although only one of the processors controlled the display at a given time.[659] Within the forward cockpit, the left five display units were operated by switches on the commander’s side (specifically, panel F6), while the right four display units were operated by switches on the pilot’s side (specifically, panel F8).[660]

The four analog-to-digital converters were used to convert the analog data from the main propulsion system, the APU/hydraulics system, the OMS, and the surface position indicator subsystem data into digital data. The digital data was used by the integrated display processors to generate the images on the display units. Two of the analog-to-digital converters covered the main propulsion system, the OMS, and the surface position indicator subsystem; the other two

---

[656] The physical description of the MEDS begins on page 122.
[657] USA, *Crew Operations*, 2.6-13, 2.6-14.
[658] USA, *Crew Operations*, 2.6-14.
[659] The three forward MDUs were only connected to one integrated display processor.
[660] USA, *Crew Operations*, 2.6-15.

processed the APU and hydraulics system data. Each converter simultaneously communicated with two integrated display processors.[661]

Three identical keyboards on the flight deck provided the means to command the MEDS. Two were on the center console, one for the commander and one for the pilot, and the third was on the aft mission station. The commander and pilot keyboards contained thirty-two momentary double-contact pushbutton keys; the double contact allowed communication on separate signal paths to two integrated display processors. They used a select switch to select which integrated display processor they wanted to use. The mission station keyboard also had thirty-two keys, but only used one set of contacts, because it was only wired to the aft processor. Through the ten numeral keys, six letter keys, two algebraic keys, and thirteen special function keys, the crew could ask the GPCs over 1,000 questions about the mission and condition of the vehicle. Individual keys or entire keyboards could be changed out while on orbit in the event of a failure.[662]

The **master timing unit** provided precise frequency outputs for various timing and synchronization purposes for the GPCs, as well as many of the orbiter's subsystems. It had three time accumulators that provided both Greenwich Mean Time and MET, in days, hours, minutes, seconds, and milliseconds for up to one year. It was a stable, crystal-controlled frequency time source that contained two oscillators for redundancy; the signals from the oscillators were passed through signal shapers and frequency drivers to three accumulators. From the accumulators, the serial digital time data was provided on demand to the GPCs, which used the data for reference time and time-tagging systems management processing. The master timing unit also provided digital timing outputs to drive four digital timers in the flight deck (two mission timers, two event timers); it was located in the aft avionics bay on the middeck of the crew compartment.[663]

The DPS contained three **SSME interface units**, which were used to command the SSMEs. The system also had two **data bus isolation amplifiers** that interfaced with ground support equipment, the launch processing system, and the SRBs.[664] In addition, there were two **master events controllers**, one in the forward avionics bays and one in the aft avionics bays. These controllers provided all synchronization of control and measurement data between the GPCs and the orbiter, SRB, and ET pyrotechnic and control devices.[665]

Software

The **PASS** was the principal software used to operate the orbiter during a mission. The PASS software was divided into two main groups, system software and applications software; data from the two groups was combined to form a memory configuration for a specific mission phase.

---

[661] USA, *Crew Operations*, 2.6-15.
[662] USA, *Crew Operations*, 2.6-15, 2.6-16.
[663] USA, *Crew Operations*, 2.6-16, 2.6-17.
[664] USA, *Crew Operations*, 2.6-2.
[665] The Boeing Company, "Vehicle Engineering," (presentation during STS-106 Flight Readiness Review, August 29, 2000), 109.

The programs were written in HAL/S (high-order assembly language/shuttle), a computer language developed specifically for real-time space flight applications. System software controlled the interfaces between the GPCs and the other components of the DPS. The system software consisted of three different programs. The flight computer operating system controlled key vehicle system parameters, allocated computer resources, interrupted programs for higher priority activities, and updated computer memory. User interface programs provided the instructions for processing crewmember commands and requests. The system control program initialized each GPC and coordinated the multi-computer operations during critical mission phases.[666]

The applications software performed the functions required to fly and operate the vehicle. The software was divided into three major functions: GNC, systems management, and payload. GNC software was used during launch, ascent, maneuvering on orbit, entry, and landing; it was the only function that allowed for redundant set synchronization. Systems management programs monitored the various vehicle systems, and only one GPC could process a memory configuration at a given time. Payload functions were typically only used during vehicle preparation activities at KSC; on-orbit payload operations were covered by systems management programs. These major functions were divided into mission phase oriented blocks called operational sequences. Each operational sequence was loaded into the GPCs from the mass memory units, as specified by the flight plan.[667]

The GNC portion of the **BFS** was intended for use only in a contingency situation; it was capable of controlling the vehicle and performing systems management functions. Although the BFS was simpler than the PASS, it was also divided into system software and applications software. The BFS system software performed basically the same functions as the PASS system software. The applications software had two major functions, GNC and systems management. The GNC programs supported ascent and deorbit/entry activities, as well as limited on-orbit operations. The systems management applications supported only the ascent and entry phases.[668]

Electrical Power System

Functions and Operations

The electrical power system (EPS; Figure No. B-115) served as the main source of power for the orbiter during all phases of flight. The system, consisting of equipment and reactants, produced electrical power for distribution throughout the orbiter, as well as for the ET, SRBs, and payloads, when the vehicle was not connected to ground support equipment. The electrical power system was functionally divided into three subsystems: the power reactants storage and

[666] USA, *Crew Operations*, 2.6-20.
[667] USA, *Crew Operations*, 2.6-21, 2.6-22.
[668] USA, *Crew Operations*, 2.6-23.

distribution subsystem, the fuel cell power plant subsystem, and the electrical power distribution and control subsystem.[669]

During prelaunch operations, ground support equipment filled the power reactant storage tanks with LH2 and LO2, approximately 2 days before launch. In addition, ground support equipment provided GH2 and GO2 to the power reactants storage and distribution system manifold to minimize use out of the tanks prior to liftoff. This supply operation was terminated roughly 2 minutes, 35 seconds before launch[670]. The fuel cells were activated prior to the crew entering the vehicle; nevertheless, until 50 seconds before liftoff, power to the orbiter was provided by both the fuel cells and ground support equipment.[671]

The EPS continued to operate through all phases of the mission, requiring minimal flight crew interaction for nominal operations. The entire system could, however, be actively monitored by both the crew and ground controllers.[672]

System Description

Power Reactants Storage and Distribution Subsystem: The power reactants storage and distribution system stored the reactants (cryogenic hydrogen [H2] and oxygen [O2]) and supplied them via three isolatable reactant manifolds to the three fuel cells; it also supplied O2 to the ECLSS for crew cabin pressurization. The major components of the system were the storage tanks for the H2 and O2, tank heaters, and the reactants distribution system. All of the components were located in the midfuselage, underneath the payload bay liner. The storage tanks were grouped into sets of one H2 and one O2 tank; up to five sets were installed in the vehicle depending upon the mission requirements.[673] Both reactants were stored in double-walled, thermally insulated spherical tanks at cryogenic temperatures (-420 degrees F for the H2 and -285 degrees F for the O2); the temperatures of the fuel and oxidizer increased as each reactant was used. The reactants were maintained at supercritical pressures, over 188 psia for the H2 and over 731 psia for the O2. The tanks were fitted with sensors to measure remaining quantities.[674]

The H2 tanks were comprised of a 41.51”-diameter inner pressure vessel and a 45.5”-diameter outer shell; both were made of aluminum 2219. Each had an internal volume of 21.39 cubic feet and could store up to 92 pounds of H2. The O2 tanks consisted of a 33.435”-diameter inner pressure vessel made of Inconel 718 and a 36.8”-diameter outer shell made of aluminum 2219. Each had an internal volume of 11.2 cubic feet and stored up to 781 pounds of O2. The inner pressure vessels of both the H2 and O2 tanks were kept supercold by minimizing conductive,

---

[669] USA, *Crew Operations*, 2.8-1.
[670] The LH2 and LO2 were later pressurized, resulting in cryogenic H2 and O2, which was neither liquid nor gas, but rather had properties of both.
[671] USA, *Crew Operations*, 2.8-32, 2.8-33.
[672] USA, *Crew Operations*, 2.8-1.
[673] An extended duration orbiter pallet, which held additional tank sets, could be installed in the vehicle.
[674] USA, *Crew Operations*, 2.8-1.

convective, and radiant heat transfer. Conductive heat was minimized by suspending the inner vessel within the outer shell through the use of twelve low-conductive supports; convective heat transfer was limited by maintaining a vacuum between the inner vessel and the outer shell. Radiant heat transfer was reduced by inserting a shield between the vessel and the shell; this was provided only for the H2 tanks. In addition, each H2 tank was fitted with one heater probe, and each O2 tank was fitted with two heater probes. The purpose of the heaters was to add heat energy to the tank, in order to maintain a constant pressure as the reactant was depleted.[675]

From the storage tanks, the reactants flowed through a relief valve/filter package module. Every tank contained a tank pressure relief valve, and a filter; tank sets 1 and 2 also included a manifold pressure relief valve. Each reactant then flowed through a valve panel, which provided an isolation capability for the three reactant manifolds, as well as an isolation capability between a fuel cell and its associated manifold. The O2 valve panels also had the capability to provide O2 to the ECLSS pressure control system. In addition, each module had a check valve to prevent reactants from flowing from one tank to another if there was a tank leak.[676]

Fuel Cell Power Plant Subsystem: *Discovery* contained three fuel cells, all were located in the forward portion of the midfuselage. Each fuel cell had a length of 40", a width of 15", and a height of 14", and was reusable and restartable. Each fuel cell was individually coupled to the power reactant storage and distribution system, the active thermal control system, the supply water storage subsystem, and the electrical power distribution and control subsystem. The fuel cells produced heat and water as they generated electrical power; the heat was directed to the fuel cell heat exchanger to be redirected to the Freon coolant loops, whereas the water was sent to the supply water storage subsystem for use by the ECLSS.[677] Each of *Discovery's* three fuel cells operated as an independent electrical power source, supplying up to 10 kilowatts (kW) of maximum continuous power in nominal situations, 12 kW continuously in off-nominal situations, or 16 kW for a maximum of 10 minutes.[678] The average on-orbit power consumption of the vehicle itself was roughly 14 kW, which left additional capability for payloads. Each fuel cell was serviced in between flights, and could be reused until it accumulated up to 2,500 hours of on-line service.[679]

Each fuel cell consisted of two distinct parts: a power section and an accessory section. The power section was where the H2 and O2 reacted to produce electrical power, water, and heat. This section contained ninety-six individual cells, which were grouped into three substacks of thirty-two cells. Manifolds extended over the length of each substack to distribute H2, O2, and coolant to the individual cells. Each cell contained an oxygen electrode (cathode) and a hydrogen electrode (anode) separated by a porous matrix with potassium hydroxide electrolyte.[680] The

[675] USA, *Crew Operations*, 2.8-3.
[676] USA, *Crew Operations*, 2.8-7, 2.8-8.
[677] USA, *Crew Operations*, 2.8-9.
[678] An example of an off-nominal situation would be if one or more of the fuel cells failed during the mission.
[679] USA, *Crew Operations*, 2.8-10.
[680] An electrolyte is a substance with extra ions, which makes the substance electrically conductive. A pH sensor,

accessory section of the fuel cell served several functions. It monitored fuel cell performance and health, and provided the optimal operating conditions for the fuel cell by removing water from the fuel cell, regulating its temperature, purging contaminants from the fuel cell, providing electrical control, and regulating fuel cell pressure.[681]

The fuel cells generated power through an electrochemical reaction of H2 and O2. The reactants entered the cell manifold through a preheater, which heated them to around 40 degrees F. The reactants then passed through a 6-micron filter and a dual gas regulator module; the latter reduced the pressure of the reactants, returning them to a gaseous state. The regulated GO2 lines were connected to an accumulator, which maintained an equalized pressure between the oxygen and the fuel cell coolant. The fuel cell's coolant system circulated a liquid fluorinated hydrocarbon through the cell stack and carried the waste heat to the fuel cell heat exchanger, where it was transferred to the Freon coolant loop system. This maintained the cell stack at an approximate operating temperature of 200 degrees F.[682]

After passing through the regulator module, the GH2 was first mixed with recirculated water vapor and hydrogen gas exhaust from the cell stack. It was then routed through a condenser where the saturated water vapor was cooled to form liquid water droplets, which were separated from the mixture and pressure-fed to the potable water tanks in the crew compartment's equipment bay.[683] The GH2 and water vapor mix was routed back to the cell stack, where some of it was consumed in the reaction. The remainder flowed through the stack, removing the product water vapor formed at the anode. In the meantime, GO2 from the dual gas regulator module flowed directly through two ports into a closed-end manifold within the fuel cell stack. All of the GO2 that flowed into the stack was consumed, except during purge operations.[684]

In order to maintain efficiency, the fuel cells were periodically purged to cleanse them of inert gases or contaminants that accumulated around the electrodes during operation; the sequence could be controlled manually by the crew, or automatically by the flight software (after being initiated by the crew or by a ground command sent by Mission Control). The operation began by activating the purge line heaters, to ensure that the reactants did not freeze within the lines. The purge valves were later opened to increase the flow of the GO2 through the cell stacks and to allow contaminants to be dumped overboard with the purged gas.[685]

---

which measures how acidic or basic a substance is, was located downstream of the hydrogen pump/water separator to detect if any of the potassium hydroxide electrolyte had entered the product water. USA, *Crew Operations*, 2.8-14.

[681] USA, *Crew Operations*, 2.8-10.

[682] USA, *Crew Operations*, 2.8-11.

[683] This water could then be used for crew consumption and for cooling the Freon loops by feeding the flash evaporator system. If the tanks were full, excess water was dumped overboard. USA, *Crew Operations*, 2.8-11, 2.8-14. The discussion of the ECLSS begins on page 174.

[684] USA, *Crew Operations*, 2.8-11.

[685] USA, *Crew Operations*, 2.8-15, 2.8-16.

Electrical Power Distribution and Control Subsystem: The electrical power distribution and control subsystem controlled and distributed all electrical power (both alternating current [ac] and direct current [dc]) to the orbiter's systems and subsystems, the SRBs, the ET, and all payloads (Figure No. B-116). The subsystem consisted of three main power buses, three primary ac buses, three essential buses, nine control buses, and two preflight buses.[686] In general, the power created by each fuel cell was distributed to one of three main dc buses, as well as one of three essential buses.[687] The essential buses provided power to switches that were necessary to restore power to a failed main dc or ac bus, and to some essential electrical loads or switches.[688] Each main bus also supplied power to three solid-state, single-phase inverters. The three inverters were phase sequenced with each other to provide 117 volt, 400-Hertz (Hz) ac power to one of three ac buses that powered all of the vehicle's ac loads.[689]

Direct current electrical power for the orbiter was routed through three distribution assemblies, each of which was nominally powered by one of the fuel cells, and contained fuses, relays, and remotely controlled motor-driven switches. Each assembly further distributed power to one forward power controller assembly, one mid power controller assembly, and one aft power controller assembly.[690] Each forward power controller assembly supplied power to one forward motor controller assembly and one forward load controller assembly; it also provided dc power to three ac inverters associated with a single ac bus. Two of the mid power controller assemblies supplied power to two of four mid motor controller assemblies, while the third mid power controller assembly distributed power to all four mid motor controller assemblies. Each aft power controller assembly supplied power to a smaller aft power controller assembly, one aft load controller assembly, and one aft motor controller assembly. In addition, the aft power controller assemblies contained power contactors, which controlled and distributed ground-supplied power to the orbiter prior to startup of the fuel cells. Further, each aft load controller assembly provided power to the ET, and each aft power controller assembly supplied power to the SRBs.[691]

The load controller assemblies contained hybrid drivers, which were solid-state switching devices, and thus, had no mechanical parts. These devices were either used as logic switches, for turning on a specific load, or as low-power electrical loads. The function of each motor controller assembly was to supply ac power to noncontinuous ac loads, such as the motors used to open and close vent doors, star tracker doors, payload bay doors and latches, ET doors, RMS

---

[686] A bus is a distribution point of electrical power.
[687] In the event of a failure, any main bus could be connected to another main bus.
[688] Examples of essential switches were those that powered the general purpose computer switches, the TACAN and MSBLS power switches, the caution and warning system, and the master timing unit. USA, *Crew Operations*, 2.8-24.
[689] USA, *Crew Operations*, 2.8-20.
[690] As the designations infer, the forward power controller assembly was for the forward section of the vehicle, the mid power controller assembly was for the midsection of the orbiter, and the aft power controller assembly was for the aft section of the vehicle.
[691] USA, *Crew Operations*, 2.8-23, 2.8-28.

deploy motors and latches, and RCS/OMS motor-actuated valves. Each assembly contained main dc buses, ac buses, and hybrid relays that were remotely controlled. The hybrid relays permitted major electrical power distribution buses to be located close to the major electrical loads, which minimized use of heavy electrical feeders to and from the pressurized crew compartment display and control panels. This reduced the amount of wiring, thus limiting the weight and permitting more flexible electrical load management. The dc buses were used only to supply control or power to the hybrid relays so that the ac power could be started or terminated.[692]

The ac power generated by the electrical power distribution and control system was distributed to system loads through three independent ac buses. This ac power system included ac inverters, which converted dc power to ac power, and inverter distribution and control assemblies, which contained the ac buses and ac bus sensors. The ac power was distributed from the inverter distribution and control assemblies to the three-phase motor loads throughout the vehicle, as well as some single phase loads (mostly lighting).[693]

The power controller assemblies, load controller assemblies, motor controller assemblies, and inverters within the forward avionics bays were mounted on cold plates and cooled by the water coolant loops. The inverter distribution and control assemblies in the forward avionics bays were air-cooled. All of the electrical components in the midfuselage were mounted on cold plates and cooled by the Freon coolant loops. The load controller assemblies, power controller assemblies, and motor controller assemblies that were located in the aft avionics bays were mounted on cold plates and cooled by the Freon coolant loops.[694]

Environmental Control and Life Support System

While on orbit, *Discovery's* crewmembers required a habitable environment, similar to that on Earth. This was provided by the ECLSS (Figure No. B-117), which regulated the temperature and pressure of the crew cabin, as well as the external airlock. The system also managed the storage and disposal of water and crew waste. Although by the end of the SSP a typical mission lasted approximately fourteen days, the ECLSS was capable of supporting eight crewmembers for a period of up to twenty-one days.[695]

The ECLSS was functionally divided into four systems: the pressure control system, the atmospheric revitalization system, the active thermal control system, and the supply and wastewater system. Each of these systems is discussed separately.

---

[692] USA, *Crew Operations*, 2.8-28, 2.8-29.
[693] USA, *Crew Operations*, 2.8-26.
[694] USA, *Crew Operations*, 2.8-30.
[695] Baker, *Manual*, 78-79; USA, *Environmental Control and Life Support System* (Houston: United Space Alliance, 2006), 1-1.

Pressure Control System

Function and Operations

The pressure control system maintained a pressure of roughly 14.7 psi within the crew cabin and provided the proper atmosphere to cool all cabin-air-cooled equipment. It also provided an air mixture of approximately 80 percent nitrogen and 20 percent oxygen, which closely matches the Earth's atmospheric conditions at sea level. There were two identical, redundant systems, known as PCS 1 and PCS 2, each of which was individually capable of maintaining the proper pressure and atmosphere within the crew cabin.[696]

Approximately 90 minutes before lift-off, the cabin was pressurized to approximately 16.7 psi to check for leaks; it was left at that pressure for roughly 35 minutes.[697] During ascent, both of the cabin regulator inlet valves were closed to isolate the regulators, in case a cabin leak developed.[698] In addition, the oxygen regulator inlet valves were closed to direct all oxygen to the crossover manifold to supply the crew's advanced crew escape suit helmets.[699] The oxygen/nitrogen control valve on PCS 1 was open to allow nitrogen to pressurize the oxygen/nitrogen manifold; the oxygen/nitrogen control valve on PCS system 2 was closed. The pressure control system remained in this ascent configuration until early in the flight plan.

Typically, on the first flight day, the cabin regulator inlet valve on the selected pressure control system (usually PCS 1) was opened, enabling the cabin regulator to automatically maintain the cabin pressure at 14.7 psia. In addition, the oxygen regulator inlet valve was opened, and the selected system oxygen/nitrogen control valve was set to automatic, enabling the controller to control whether oxygen or nitrogen flowed into the oxygen/nitrogen manifold based on cabin partial pressure of oxygen level. The system was reconfigured to PCS 2 halfway through the mission.[700]

During the SSP, flight surgeons developed a "10.2-psia cabin protocol" to minimize the risk of decompression sickness for the crewmembers preparing for an EVA.[701] In order to minimize the in-suit prebreathe just prior to the EVA, the entire crew cabin was depressurized to 10.2 psia using the airlock depressurization valve located in the airlock. During this operation, the cabin pressure and the partial pressure of oxygen levels had to be manually managed, because there

---

[696] USA, *Environmental Control*, 2-1. Throughout this section, the acronym PCS (pressure control system) will only be used when distinguishing between the two redundant systems.
[697] USA, *Crew Operations*, 2.9-11.
[698] This configuration conserved nitrogen by not allowing any makeup flow into the cabin until the cabin pressure dropped below 8 psia. USA, *Crew Operations*, 2.9-44.
[699] The crew closed their helmet visor shortly before lift-off and breathed 100 percent oxygen until shortly after Solid Rocket Booster Separation. USA, *Crew Operations*, 2.9-44.
[700] USA, *Crew Operations*, 2.9-44.
[701] The EVA crewmembers must prebreathe pure oxygen before they go EVA to help flush the nitrogen out of their body tissue. USA, *Crew Operations*, 2.9-44.

was no automatic regulator. Typically, the cabin remained at this reduced pressure for twelve or twenty-four hours prior to the EVA, dependent upon the length of the final crewmember prebreathe in the EVA suit.[702]

The pressure control system configuration was set the same for entry as it was for ascent.[703]

System Description

The pressure control system contained four cabin pressure relief valves, which protected the structural integrity of the crew cabin. Two of the valves were positive pressure relief valves; they were arranged in a parallel configuration and provided overpressurization protection. The other two were negative pressure relief valves, which were also arranged in parallel and protected the crew cabin from underpressurization. One of two systems, PCS 1 or PCS 2, each of which consisted of a liquid oxygen storage system, a gaseous nitrogen storage system, and an oxygen/nitrogen manifold, maintained the crew cabin atmosphere.[704]

The orbiter's power reactant and distribution system, part of the EPS, supplied the pressure control system with oxygen from the cryogenic tanks used to feed the power fuel cells; they were located below the payload bay in the midfuselage. Supply valves controlled the flow of oxygen into the pressure control system, which was then routed through a restrictor, which regulated the flow. In addition, the restrictor served as a heat exchanger, to warm the oxygen with Freon before it flowed into the cabin.[705] Prior to entering the cabin, the oxygen flowed through a restrictor, which protected the fuel cell from being depleted by the pressure control system. The restrictor in PCS 1 was a single, 25 pound per hour flow restrictor; PCS 2 contained two 12.5 pounds per hour flow restrictors in a parallel formation. From the restrictor, the oxygen flowed through its piping system, which penetrated the X_o = 576 bulkhead and entered into the crew compartment; check valves prevented the reverse flow of oxygen. Downstream of the check valve, a crossover valve connected the two oxygen systems, allowing both to supply the oxygen crossover manifold, which provided oxygen to the launch/entry suit helmet regulators, the direct oxygen valve, and the airlock's EMU oxygen supply lines. An oxygen regulator inlet valve, located downstream of the oxygen crossover line, reduced the oxygen supply pressure to roughly 100 psia. The regulated oxygen then passed through another check valve and into the oxygen/nitrogen manifold; the oxygen could only enter the manifold when the nitrogen supply line was closed.[706]

The gaseous nitrogen system included four permanently installed storage tanks; all orbiters could carry up to four additional tanks if required. The two storage tanks designated for PCS 1 were

---

[702] USA, *Crew Operations*, 2.9-44.
[703] USA, *Crew Operations*, 2.9-45.
[704] USA, *Crew Operations*, 2.9-3, 2.9-4; USA, *Environmental Control*, 2-1.
[705] Freon loop 1 warms the PCS 1 oxygen, and Freon loop 2 warms the PCS 2 oxygen. USA, *Environmental Control*, 2-1.
[706] USA, *Environmental Control*, 2-1, 2-3.

located at the aft end of the midfuselage, below the payload bay, while the two tanks designated for PCS 2 sat at the forward right side of the midfuselage.[707] The nitrogen tanks were constructed of filament-wound Kevlar fiber with a titanium liner, and had a volume of 8,181 cubic inches. Gaseous nitrogen left the tanks at an approximate pressure of 3,300 psia, flowed through the supply valves, and entered the nitrogen manifold. The system then directed the nitrogen through a regulator, which reduced the pressure to roughly 200 pounds per square inch, gauge (psig), before the gas was routed into supply lines that passed through the $X_o = 576$ bulkhead and into the crew compartment; a check valve prevented the reverse flow of nitrogen. The system then directed the nitrogen through the water tank regulator, which pressurized the supply and wastewater tanks. Downstream of the water tank regulator was the nitrogen crossover valve, allowing the PCS 1 and PCS 2 nitrogen systems to be connected. Afterward, the nitrogen entered the oxygen/nitrogen manifold.[708]

A cabin regulator maintained the cabin pressure at 14.7 psia when the regulator inlet valve was open; an emergency regulator maintained the cabin pressure at 8 psia in the event of a large cabin leak. The oxygen/nitrogen control valve controlled the flow of either the oxygen or the nitrogen into the oxygen/nitrogen manifold. The position of the control valve could be set manually by the crew, or automatically by the oxygen/nitrogen controller. When the valve was manually open, nitrogen flowed into the manifold and forced the oxygen check valve to close. When the valve was manually closed, nitrogen was unavailable, so any remaining gas in the manifold entered the cabin, and once the manifold's pressure dropped below 100 psi, the oxygen check valve opened and oxygen entered the manifold. While the vehicle was on orbit, the control valve was primarily set to automatic control. In this mode, the control valve opened or closed, depending on the partial pressure of oxygen within the crew cabin. If the partial pressure of oxygen was below 2.95 psia, the valve closed and oxygen entered the manifold. On the other hand, if the partial pressure of oxygen was greater than 3.45 psia, then the valve opened and nitrogen entered the manifold. If the partial pressure was between 2.95 and 3.45 psia, whatever gas was within the manifold flowed into the cabin until one of the limits was reached.[709]

Other features of the pressure control system included a cabin vent isolation valve, a cabin vent valve, and an airlock equalization valve. The cabin vent isolation valve and a cabin vent valve were arranged in series to vent the crew cabin to ambient pressure while the vehicle was on the ground or to vent the cabin on orbit in an extreme emergency. An airlock equalization valve maintained equal pressure between the airlock and the crew cabin; the airlock depressurization valve was used to depressurize the crew cabin to 10.2 psia, in preparation for an EVA, and to further depressurize the airlock for an EVA.[710]

---

[707] USA, *Environmental Control*, 2-4. The tanks were moved to these positions to provide the vehicle with a more favorable center of gravity.
[708] USA, *Environmental Control*, 2-5.
[709] USA, *Environmental Control*, 2-8, 2-9.
[710] USA, *Crew Operations*, 2.9-11, 2.9-12.

Atmospheric Revitalization System

Functions and Operations

The atmospheric revitalization system controlled ambient heat, relative humidity, carbon dioxide levels, and carbon monoxide levels within the crew cabin; it also provided cooling for cabin avionics (Figure Nos. B-118, B-119, B-120). The system maintained a crew cabin air temperature between 65 and 80 degrees F, with a relative humidity between 30 and 65 percent.

The atmospheric revitalization system was configured for ascent prior to the crew entering the orbiter at the launch pad. For the air subsystem, one cabin fan, one humidity separator, one inertial measurement unit fan, and one fan in each avionics bay were operating. Once the proper cabin temperature was reached, the controller was unpowered. In addition, the signal conditioners for the humidity separator and the inertial measurement unit fan were unpowered to prevent against a potential electrical short that could cause a loss of the SSME controller. For the water subsystem, the primary water loop was operational.[711]

Assuming there were no failures within the air subsystem during launch and ascent, the only action required to manage the system while on orbit was the periodic replacement of the lithium hydroxide canisters. Up to thirty spare canisters were stored under the middeck floor. The controls for the water subsystem were set to automatically cycle the inactive secondary water loop every four hours in order to prevent freezing.[712]

System Description

The atmospheric revitalization system was divisible into two subsystems, the air subsystem and the water subsystem. The air subsystem consisted of a network of fans that circulated air through the cabin, the avionics bays, and the inertial measurement units to remove heat, humidity, carbon dioxide, odors, dust, debris, and particles. The water subsystem was comprised of a series of water coolant loops, which collected heat from the various heat exchangers and transferred it to the Freon/water heat exchanger.[713]

The **air subsystem** was functionally divisible into three circulation systems: the cabin fan system that circulated air throughout the crew cabin, the avionics fan system, which circulated air throughout the three forward avionics bays, and the inertial measurement unit fan system that cooled the inertial measurement units. A separate system provided air to the vehicle's airlock. With the exception of the ductwork, all air subsystem components were located under the middeck floor.

---

[711] USA, *Crew Operations*, 2.9-45; USA, *Environmental Control*, 3-29.
[712] USA, *Crew Operations*, 2.9-45; USA, *Environmental Control*, 3-29.
[713] USA, *Environmental Control*, 3-1. The Freon/water heat exchanger was considered part of the active thermal control system; it is described in further detail beginning on page 180.

The cabin fan system was comprised of two cabin fans, each of which was powered by a three-phase 115-volt ac motor. Only one of the fans was used at a given time to circulate air throughout the crew cabin at a nominal flow rate of 1,400 pounds per hour. The fan drew air into the cabin ductwork where a 70-micron filter removed any particles suspended in the air. A check valve was located at the outlet of each fan to prevent the air from backflowing through the non-operating fan. The cabin air was then directed through two lithium hydroxide canisters, in a parallel arrangement, for carbon dioxide removal; activated charcoal within the canisters removed odors and trace contaminants.[714]

Downstream of the lithium hydroxide canisters was the cabin temperature control valve, a variable position valve that regulated the air temperature by proportioning the volume of air that bypassed the cabin heat exchanger. The valve was controlled manually or automatically by one of two cabin temperature controllers, which were motor-driven actuators that adjusted the cabin temperature control valve to achieve the selected temperature.[715] Depending upon the setting of the temperature control valve, part of the air volume was directed to the crew cabin heat exchanger, where heat was transferred to the air revitalization system's water coolant loop.[716] Humidity condensation that formed in the heat exchanger was pushed by the airflow to the two humidity separators, which separated the water from the air; the water was routed to the wastewater tank, while the air was returned to the cabin. A small portion of the revitalized and conditioned air from the heat exchanger was sent to the carbon monoxide removal unit, which converted the carbon monoxide into carbon dioxide.[717]

The portion of the air volume that was not routed through the heat exchanger was directed through a bypass duct. This duct carried the warm cabin air around and downstream of the heat exchanger, where the warm air was mixed with the revitalized and conditioned air, thereby bringing the air to the designated temperature. The air was then routed through the supply air duct and exhausted into the crew cabin through various station duct outlets.[718]

Each of the three avionics bays within the crew compartment had its own fan system, which functioned as an enclosed system although it was not airtight. Similar to the cabin fan system, each avionics bay circulation system contained two fans, only one of which was used at a given time. Each fan was powered by a three-phase 115-volt ac motor, and circulated air at a rate of

---

[714] USA, *Crew Operations*, 2.9-12, 2.9-13; USA, *Environmental Control*, 3-2, 3-3. Both *Discovery* and *Atlantis* were configured for this lithium hydroxide system; *Endeavour* was upgraded to use a regenerable carbon dioxide removal system while on orbit. This system involved passing the cabin air through one of two identical solid amine resin beds, which consisted of a polyethylenimine sorbent coating on a porous polymeric substrate. This process was only available while on-orbit; the lithium hydroxide system was used for launch and landing. USA, *Crew Operations*, 2.9-13, 2.9-14.
[715] USA, *Crew Operations*, 2.9-17; USA, *Environmental Control*, 3-3.
[716] In support of ISS missions, the orbiters were modified to redirect the water from the humidity separator to a contingency water container while on orbit. This container allowed dumping to be minimized while the orbiter was docked to the ISS. USA, *Crew Operations*, 2.9-18; USA, *Environmental Control*, 3-8.
[717] USA, *Crew Operations*, 2.9-17.
[718] USA, *Crew Operations*, 2.9-17.

875 pounds per hour. The fan drew air through the bay and across the avionics equipment to pick up heat. The air was pulled through a 300-micron filter, and into the fan, which then directed the heated air to that avionics bay's heat exchanger, located beneath the middeck floor. Here, the heat was transferred to the air revitalization system's water coolant loop, and then the cooled air was returned to the avionics bay. A check valve was located in the outlet of each fan to prevent a reverse flow through the non-operating fan.[719]

The inertial measurement unit fan system contained three identical fans for a triple redundancy. Each fan was powered by a three-phase 115-volt ac motor that circulated air at a rate of 144 pounds per hour. Nominally, only one fan was used at a given time; it drew cabin air through a 300-micron filter and across the three units. The heated air was then directed into the inertial measurement unit heat exchanger, where the heat was transferred to the air revitalization system's water coolant loop. The cooled air was then returned to the cabin. Each fan was fitted with a check valve to prevent reverse airflow through the non-operating fans.[720]

The **water subsystem** contained two complete, independent water coolant loops, the primary loop and the secondary loop, that flowed side-by-side through the crew compartment to collect excess heat. The two loops could operate simultaneously, although only one was typically used at a given time. The only difference between the two water loops was that the primary loop had only one water pump, while the secondary loop contained two water pumps.[721]

The water pumps for both loops were each powered by a three-phase, 115-volt ac motor and were located in the equipment bay of the crew compartment. Downstream of each loop's water pump(s), the water flow was split into three parallel paths. One path went through the Avionics Bay No. 1 heat exchanger and cold plates.[722] The second travelled through the Avionics Bay No. 2 heat exchanger and cold plates, and also provided thermal conditioning of the crew cabin window seals. The third path was routed through the crew cabin MDM cold plates, the Avionics Bay No. 3A heat exchanger and cold plates, and the Avionics Bay No. 3B cold plates. In each avionics bay, the heat generated by the electronic equipment was transferred through its cold plate to the water coolant loop.[723]

After passing through their respective avionics bay, the three water loop paths rejoined upstream of the Freon/water heat interchanger. Just prior to entering the heat interchanger, the water line split into two paths. One path flowed through the Freon/water interchanger, where the water loop was cooled. The cooled water was then directed through the liquid-cooled garment heat exchanger, the potable water chiller, the cabin heat exchanger, and the inertial measurement unit heat exchanger. The second path bypassed the Freon/water interchanger and liquid-cooled

---

[719] USA, *Crew Operations*, 2.9-19; USA, *Environmental Control*, 3-9.
[720] USA, *Crew Operations*, 2.9-19; USA, *Environmental Control*, 3-10.
[721] USA, *Crew Operations*, 2.9-19, 2.9-20; USA, *Environmental Control*, 3-10.
[722] A cold plate was essentially a metal base, to which a piece of equipment was mounted. Water flowed through the plate, providing a means of cooling the equipment.
[723] USA, *Crew Operations*, 2.9-20, 2.9-21; USA, *Environmental Control*, 3-12.

garment heat exchanger. A bypass valve regulated the amount of water that went through the coolant loop and that bypassed the Freon/water interchanger and heat exchangers. Like the air subsystem, this division of the path provided temperature control of the water that exited the pump package.[724]

Active Thermal Control System

Functions and Operations

The active thermal control system had three basic functions. First, it transferred heat from the vehicle's various heat sources to a collection of heat sinks, through the Freon coolant loops. The system's second function was to cool or heat the orbiter's subsystems through cold plates and heat exchangers. Its third function was to provide heat rejection during all phases of a mission, following SRB separation.[725]

Prior to launch, the active thermal control system was connected to the T-0 umbilicals on the mobile launcher platforms through its ground support equipment system heat exchanger. Approximately 6 seconds before liftoff, the ground servicing coolant flow was terminated; all umbilicals were disconnected by T-0.[726] Following liftoff, the orbiter had no active means of cooling until after SRB separation, at which time the flash evaporator system was activated. This system served as the primary cooling system through ascent and into post-insertion of the vehicle in orbit. The radiator system was activated on orbit, just prior to the opening of the payload bay doors. Once the doors were opened, the radiator system became the primary means of cooling the orbiter; the flash evaporator system was used for supplemental cooling as required.[727]

During deorbit preparations, before the doors were closed, the Freon in the radiators was coldsoaked for use as a heat sink during the latter stages of entry. This entailed storing cooled Freon within the panels by activating the flash evaporator system to cool the Freon loops to a temperature of 39 degrees F. After the panels were coldsoaked for a little over an hour, the radiators were bypassed and the flash evaporator system became the primary cooling source. The flash evaporator system cooled the vehicle until it reached an altitude of approximately 175,000'; at this point the system was deactivated and the radiators were reactivated using the coldsoaked panels for cooling until after the orbiter came to a stop following landing, or until the radiator coldsoak was depleted. Once either of these events occurred, the ammonia boiler system became the primary cooling source until the vehicle was connected to ground support equipment at the runway.[728]

---

[724] USA, *Crew Operations*, 2.9-20, 2.9-21; USA, *Environmental Control*, 3-12, 3-13.
[725] USA, *Crew Operations*, 2.9-23; USA, *Environmental Control*, 4-1.
[726] USA, *Environmental Control*, 4-6.
[727] USA, *Crew Operations*, 2.9-46; USA, *Environmental Control*, 4-27.
[728] USA, *Crew Operations*, 2.9-46; USA, *Environmental Control*, 4-27.

System Description

The active thermal control system (Figure No. B-121) consisted of two complete, identical Freon coolant loops, various cold plate networks for cooling avionics equipment, liquid/liquid heat exchangers, and three types of heat sinks: radiators, flash evaporators, and ammonia boilers. Each of the two Freon loops had a pump assembly, which was located in the midfuselage, below the payload bay liner. The assembly consisted of two pumps and an accumulator; one of the pumps was active at all times. The accumulator provided a positive pressure on the pumps and permitted thermal expansion in the loop. A check valve downstream of the pumps prevented a reverse flow through the non-operating pump.[729]

When a pump was operating, Freon was directed through two paths, one that went through the fuel cell heat exchanger and one that traveled through the midfuselage cold plate network;[730] the Freon absorbed the excess heat from the heat exchanger and the cold plates. The Freon then converged into one flow path before entering the hydraulic fluid heat exchanger, which absorbed some of the heat from the Freon to keep the vehicle's idle hydraulic systems warm.[731] From the hydraulic fluid heat exchanger, the Freon flowed to the radiator system, the ground support equipment heat exchanger system, the ammonia boiler system, and the flash evaporator system. Dependant upon the mission phase, one of these four systems further cooled the Freon.[732]

The **radiator system** consisted of eight radiator panels, with four panels mounted on the inside of each payload bay door; it was typically used while the vehicle was on orbit (Figure No. B-122). The radiator panels were made of an aluminum honeycomb face sheet that was 126" wide and 320" long. The two forward panels on each door were double-sided and had a core thickness of 0.9"; each panel contained sixty-eight, 0.131"-inside diameter, tubes spaced 1.9" apart. These panels were secured to the insides of the payload bay doors by six motor-operated latches, and were deployable when the doors were opened on orbit. The deployment of the radiator panels provided a greater surface area for heat rejection. The two aft radiator panels on each door were one-sided, with cores that measured 0.5" thick, and twenty-six, 0.18"-inside diameter, longitudinal tubes spaced 4.96" apart. The radiator panels on the aft payload bay doors were not deployable. They were attached to the payload bay doors by a ball joint arrangement at twelve locations, which compensated for any movement of the door and radiator panel caused by thermal expansion and contraction. A radiator flow control valve assembly was located in each Freon coolant loop; it controlled the temperature of the Freon by mixing the cold Freon coolant from the radiators with hot Freon that had bypassed the radiators. Freon radiator isolation valves were included in the system to isolate one of the radiators in the event that it was damaged by space debris.[733]

---

[729] USA, *Crew Operations*, 2.9-23; USA, *Environmental Control*, 4-3.
[730] The fuel cells were part of the electrical power system; see description beginning on page 170.
[731] USA, *Environmental Control*, 4-8.
[732] USA, *Crew Operations*, 2.9-46; USA, *Environmental Control*, 4-2.
[733] USA, *Crew Operations*, 2.9-26 through 2.9-29; USA, *Environmental Control*, 4-11, 4-12.

The **ground support equipment heat exchanger system** was only used prelaunch and postlanding. Prior to launch, the heat exchanger interfaced with the T-0 umbilical panels; it was connected to a portable cooling cart within 30 minutes of landing.[734]

The **ammonia boiler system** was used to cool the Freon coolant loops when the orbiter was below 400,000' during entry, if the radiators were not cold-soaked, or on the ground after landing before the vehicle was connected to the ground service equipment. The system consisted of one common boiler, which was fed by two complete, individual ammonia storage and control systems. Each storage and control system consisted of a storage tank, an isolation valve, an overboard relief valve, two control valves, a controller, three temperature sensors, a pressure sensor, and a feedline; all components were located within the aft fuselage. The ammonia boiler was a shell-and-tube system, divided into an ammonia side and a boiler side. The ammonia flowed into the boiler via tubes, where it was sprayed onto the Freon coolant loops; the ammonia immediately vaporized cooling the Freon. The steam carried the heat away from the loops, and all exhaust was vented overboard, next to the bottom right side of the orbiter's vertical stabilizer. Each of the two ammonia storage tanks contained a total of 49 pounds of ammonia, which provided approximately 30 minutes of cooling; the tanks were pressurized with gaseous helium. A relief valve was also included in each storage system to provide overpressurization protection for the storage tank.[735]

Between each tank and the boiler were three control valves: an isolation valve (typically closed), a primary control valve (normally open), and a secondary control valve (normally open). The controller energized the ammonia system isolation valve, which permitted the ammonia to flow to two motor-operated controller valves. The controller also commanded the primary control valve to regulate the flow to the ammonia boiler. Three temperature sensors were located on each Freon coolant loop, one was associated with the primary controller and its valve to regulate the ammonia system; the second was associated with the controller fault detection logic; and the third was associated with the secondary controller and secondary motor-operated valve.[736]

The **flash evaporator system** was used during the ascent phase of the mission, once the vehicle was above 140,000' and during deorbit and entry, until the orbiter reached an altitude of 100,000'; it could also be used on orbit to supplement the radiators. The system was situated in the aft fuselage of the orbiter, and contained two evaporators, one high-load evaporator and one topping evaporator; three logic controllers; two water feedlines; and two overboard steam ducts.[737] Each of the two evaporators were cylindrical shells with dual water spray nozzles at one end, and a steam exhaust duct at the other end; the shell was composed of two separate finned packages, one for each Freon loop. The difference between the two evaporators was that the

---

[734] USA, *Environmental Control*, 4-6.
[735] USA, *Crew Operations*, 2.9-33; USA, *Environmental Control*, 4-18.
[736] USA, *Crew Operations*, 2.9-33 through 2.9-35.
[737] USA, *Environmental Control*, 4-22. The high-load evaporator was used in conjunction with the topping evaporator during ascent and entry when higher Freon coolant loop temperatures imposed a greater heat load, which required a higher heat rejection.

high-load evaporator had larger spray nozzles, and thus a higher cooling capacity.[738] The heated Freon in the coolant loops flowed around its designated finned shell, on which water was sprayed by the nozzles from either evaporator; the water was supplied by the vehicle's potable water storage tanks. Upon contact with the fins, the water vaporized into steam, which was vented overboard, carrying the heat away from the Freon coolant loops. The flash evaporator system had two primary controllers and one secondary controller. Each of the primary controllers controlled water flow to the flash evaporator from one of the water feedlines. The secondary controller modulated the water spray from the evaporators. The steam generated in the evaporators was ejected through two overboard steam ducts on opposing sides of the orbiter's aft fuselage. Electrical heaters were employed on the topping and high-load flash evaporators' steam ducts to prevent freezing.[739]

After the Freon was cooled by one of these four systems, the coolant loop split into two parallel paths. One of the paths flowed in series through aft avionics bays 4, 5, and 6 to cool electronic avionics equipment and the four rate gyro assemblies. The second path flowed through the cargo heat exchanger (located on the port side of the midfuselage, roughly in the center), and continued through the ECLSS oxygen restrictor to warm the cryogenic oxygen to 40 degrees F. Afterwards, the flow split into parallel paths, one of which travelled through the payload heat exchanger and the other through the atmospheric revitalization system interchanger. The three loops were then reunited and returned in series to the Freon coolant pump within that coolant loop.[740]

Supply and Wastewater System

Functions

The supply water system provided water for crew consumption, hygiene, and flash evaporator system cooling; the wastewater system stored waste from the crew cabin humidity separator and from the flight crew.[741] The system was operational throughout the entire mission.

System Description

The supply water system stored water generated by the three EPS fuel cells in four water tanks, which were pressurized with nitrogen. Each tank had a usable capacity of 168 pounds, and had a length of 35.5" and a diameter of 15.5". There were redundant product water line paths from the fuel cells to two of the storage tanks, in the event that a blockage occurred in the primary water path. Temperature, pressure, and pH sensors were installed in each of the redundant paths. The water that exited the fuel cells was hydrogen-enriched, therefore it was directed through the single water relief panel through two hydrogen separators before reaching the storage tank. The

---

[738] USA, *Environmental Control*, 4-23.
[739] USA, *Crew Operations*, 2.9-31, 2.9-32; USA, *Environmental Control*, 4-22, 4-24, 4-25.
[740] USA, *Crew Operations*, 2.9-24; USA, *Environmental Control*, 4-2.
[741] USA, *Crew Operations*, 2.9-35; USA, *Environmental Control*, 5-1.

separator removed roughly 85 percent of the excess hydrogen, which was then dumped overboard through a vacuum vent.[742] As the water entered "tank A," it passed through a microbial filter that added approximately one-half parts per million of iodine to the water to prevent microbial growth; this tank was typically used for flight crew consumption. The other three tanks, labeled B, C and D, were generally used to supply the flash evaporator system and were filled after tank A. The water from the tanks could be dumped overboard, if necessary. The supply water line and the supply water dump nozzle were fitted with heaters to prevent the water from freezing.[743]

A single wastewater tank collected wastewater from both the humidity separator and the waste management system. The tank was located beneath the crew compartment middeck floor, next to the potable water tanks. It was capable of holding 168 pounds, was 35.5" in length and 15.5" in diameter. A wastewater dump isolation valve and a wastewater dump valve allowed the wastewater to be dumped overboard, through the wastewater dump line. Like the potable water supply lines, the wastewater dump line, which was upstream of the waste dump nozzle, had electrical heaters to prevent the wastewater from freezing. The wastewater tank was typically dumped when it reached 80 percent full.[744]

Guidance, Navigation, and Control

The GNC system was a combination of sensor and manual inputs, vehicle control components, and data management. The orbiter's GNC software commanded the system to effect vehicle control, and to provide sensors and controllers with the data needed to compute these commands. The overall process included three steps. First, the navigation subsystem tracked and/or measured the current position and velocity of the spacecraft with respect to a reference frame. The guidance subsystem then used this information to compute the required orbiter location needed to satisfy mission requirements. Finally, the flight control subsystems transported the vehicle to the required locations.[745]

Functions and Operations

The principle function of *Discovery's* **navigation subsystem** was to maintain an accurate estimate of the vehicle's state vector, its inertial position and velocity, with respect to time. The system tracked the orbiter's position and velocity using six parameters: X, Y, Z, Vx, Vy, and Vz. The X, Y, and Z components specified the orbiter's position in the Mean of 1950 coordinate system.[746] The Vx, Vy, and Vz components measured the velocity in feet per second, using the Mean of 1950 for distance and Greenwich Mean Time for time. To predict the components of the

[742] The redundant path did not pass through the hydrogen separator. USA, *Crew Operations*, 2.9-35.
[743] USA, *Crew Operations*, 2.9-35 through 2.9-42; USA, *Environmental Control*, 5-1 through 5-4.
[744] USA, *Crew Operations*, 2.9-42 through 2.9-44; USA, *Environmental Control*, 5-6.
[745] USA, *Crew Operations*, 2.13-5.
[746] The Mean of 1950 coordinate system measured the X, Y, and Z distances in feet from the center of the Earth.

state vector at each time value, the navigation system used the standard equations of motion, as well as information received from the inertial measurement units, the navigation sensors, and the software models of the forces acting on the orbiter. To reduce errors, Mission Control periodically uplinked new state vector data, based on ground radar tracking data. This was the typical method used to establish and maintain the inertial position and velocity of the orbiter during all flight phases.[747]

At certain times during a mission, for example when landing the orbiter, the Mean of 1950 coordinate system significantly complicated calculations. Thus, different coordinate systems were used to simplify the inputs, outputs, and computations required. All of the systems used were right-handed Cartesian systems, with three mutually perpendicular axes (x-axis, y-axis, and z-axis). The body axis coordinate system, which maintained its origin at the orbiter's center of mass, was used for pitch, roll, and yaw activities.[748] The local vertical/local horizontal system was also an orbiter-centered system, but the positive z-axis pointed toward the center of the Earth along the geocentric radial vector of the vehicle. This system was used to allow the crew to see the attitude of the orbiter in relation to the Earth's surface. The runway coordinate system was an Earth-fixed reference frame used during the ascent, entry, and landing phases of a flight. The origin of this system was at the runway center, at the approach threshold.[749]

The state vector data were used by the **guidance subsystem** to compute the actions necessary to move the orbiter from its navigation-determined position to the required position, per mission specifications. The guidance subsystem then commanded the **control subsystem** to perform the actions. These actions could be completed either through the digital autopilot, which was part of the PASS, or by the crewmembers.[750]

Beginning approximately 20 minutes before launch, the appropriate GNC software was loaded into the GPCs. Roughly 8 seconds before liftoff, the navigational software was initialized; first-stage guidance software was not activated until SRB ignition (liftoff). During launch and ascent, most of the GNC commands were directed to gimbal the SSMEs and SRBs to obtain proper attitudes and throttle the engines. The guidance subsystem also attempted to relieve the vehicle of aerodynamic loads based on system measurements of acceleration. Typically, all commands were issued by the programmed software, as opposed to the commander or pilot. Although the crew could select to perform the commands themselves, there were no planned crew actions during this first stage of flight unless a failure occurred.[751]

---

[747] USA, *Crew Operations*, 2.13-1, 2.13-3.
[748] USA, *Crew Operations*, 2.13-3; USA, *Navigation Overview Workbook* (Houston: United Space Alliance, 2006), 1-2.
[749] USA, *Crew Operations*, 2.13-3, 2.13-4.
[750] USA, *Crew Operations*, 2-13.5. In control stick steering mode, the flight crew's commands were still passed through and issued by the GPCs.
[751] USA, *Crew Operations*, 2.13-56.

During the second-stage ascent, between SRB separation and main engine cutoff (MECO), *Discovery's* crew monitored the onboard systems to ensure that the major GNC events, such as throttling, MECO, and ET separation, occurred correctly. The guidance subsystem continued to issue throttling commands to the SSMEs. Once the ET was jettisoned, about 20 seconds after MECO, the digital autopilot commanded the RCS thrusters to move the orbiter in the –z direction. The next function of the GNC system was to accomplish orbit insertion of the vehicle. Although this was typically performed through the digital autopilot, the crew could issue commands through the translational hand controller or rotational hand controller.[752]

While *Discovery* was on orbit, the main function of the GNC system was to achieve the proper position, velocity, and attitude required to accomplish all mission objectives. Associated activities included maintaining an accurate state vector, maneuvering to specified attitudes and positions, and pointing a specific orbiter body vector at a selected target (rendezvous). As appropriate, the GNC software or the crew provided commands to the OMS engines or RCS thrusters to reposition the vehicle. During rendezvous activities, the system also maintained an estimate of the target's position and velocity, which the guidance subsystem used to compute the commands required to transfer the vehicle from one position and velocity to another.[753]

During the deorbit phase of the mission, the navigation subsystem used the vehicle's three inertial measurement units to calculate the orbiter's state vector. The guidance subsystem was used to calculate altitude, position, velocity, and flight path necessary to conduct the deorbit burn. Flight control at this time was typically performed by the digital autopilot.[754]

The entry phase of a shuttle mission was subdivided into three subphases because of the different guidance software requirements; also at this time, the crew took on an active role in the management of the vehicle's state vector. During the entry subphase, the guidance subsystem attempted to keep the vehicle on a trajectory that would limit temperature, dynamic pressure, and acceleration effects on the vehicle. The guidance software issued commands to the control subsystem detailing how to guide the vehicle during flight. The crew used data provided on the various MEDS displays to determine how to use the rotational hand controllers and speed brake thrust controllers to help maintain the vehicle's trajectory. The entry subphase continued until the orbiter reached an altitude of around 83,000', when the terminal area energy management subphase began. During this period, the guidance software computed the commands that would enable the vehicle to achieve proper approach and landing conditions. Again, the crew could use the various controls to maintain these conditions. When *Discovery* reached an altitude of around 10,000', the third subphase software, approach/landing, took control of the vehicle. At this time, the guidance software commanded the vehicle to track the runway centerline and remain on a steep glide slope until an altitude of 2,000', when the pre-flare maneuver was performed to place the orbiter on a shallow guide slope. The software commanded the final flare between a height of

[752] USA, *Crew Operations*, 2.13-57, 2.13-58.
[753] USA, *Crew Operations*, 2.13-58.
[754] USA, *Crew Operations*, 2.13-60, 2.13-61.

30' and 80', during which the sink rate was reduced to 3 feet-per-second; it then directed the vehicle to the runway centerline. Throughout this phase of the mission, the navigation subsystem performed similar to the deorbit phase, except additional sensor data was incorporated to provide the accuracy needed to bring the orbiter to a pinpoint landing.[755]

System Description

Navigation Hardware: There was a variety of sensors on the orbiter that were used to gather physical data. These included the inertial measurement units, the star trackers, the crew optical alignment sight, the TACAN system, the air data system, the microwave landing system, the radar altimeters, and the GPS. Each individual element was hard-wired to one of eight flight-critical MDMs, which were connected to the GPCs. Many of the parameters could be monitored on the display system.[756]

There were three redundant inertial measurement units (Figure No. B-123) on the orbiter to provide inertial attitude and velocity data to calculate the state vector; only one was needed at a given time. The units were mounted within the crew compartment, forward of the flight deck control and display panels. The three inertial measurement units had skewed orientations to ensure that no more than one unit had an orientation problem and to allow resolution of a single-axis failure on one unit by multiple axes on another. Each unit contained three accelerometers, one each for the x-, y-, and z-axes. The accelerometers measured acceleration through two two-axis gyros. One gyro was aligned with the x- and y-axes to provide pitch and roll stabilization, and the other gyro was oriented between the z-axis and the x-y plane for yaw stabilization. Each inertial measurement unit also contained four resolvers that were used to measure the vehicle's attitude. Attitude information was used by the crew for turn coordination and steering command guidance. Each unit also contained temperature sensors and heaters to maintain thermal control in order to meet performance requirements.[757]

The two star trackers (Figure No. B-123, see Figure No. B-66 for location on vehicle) were located just forward, and to the left of, the commander's windows, within a well outside of the crew compartment. Each star tracker well had a door to protect the tracker during ascent and entry; the doors were opened once the vehicle was on orbit. The trackers consisted of a -y-axis tracker and a negative z-axis tracker. The -y tracker was oriented so that its optical axis pointed approximately along the negative y-axis of the orbiter, while the optical axis of the -z tracker pointed roughly along the negative z-axis of the orbiter. The star trackers were used to align the inertial measurement units onboard the orbiter, by searching for, acquiring, and tracking stars. They were also used to track targets and provide line-of-sight vectors for rendezvous

[755] USA, *Crew Operations*, 2.13-61, 2.13-62.
[756] USA, *Crew Operations*, 2.13-5, 2.13-6.
[757] USA, *Crew Operations*, 2.13-7, 2.13-8.

calculations. Their output consisted of the horizontal and vertical position within the field of view of the object being tracked, and its intensity.[758]

The crew optical alignment sight was an optical device that contained a reticle focused at infinity that was projected on a combining glass.[759] It was typically used if there was a significant error in the alignment of the inertial measurement units, which rendered the star trackers incapable of performing their job. The device could be mounted at either the commander's station to view along the positive x-axis, or next to the aft flight deck overhead starboard window to view along the negative z-axis.[760]

The GNC system's TACAN units were used to determine slant range and magnetic bearing of the orbiter in relation to a ground station (Figure No. B-125; see Figure Nos. B-65 through B-68 for antenna locations). There were three TACAN units on *Discovery*, each of which included a transmitter, a receiver, and a data processor; the latter decoded the selected channel and sent the frequency to the receiver.[761] The units were located within the middeck avionics bays, and were used to obtain orbiter position data from an external source and update the state vector position components during entry. Each TACAN unit had two antennas, one of which was on the bottom and the other on the top of the vehicle. Their maximum range was 400 nautical miles. Each of the ten TACAN ground stations used by the orbiter had an assigned frequency and a three-letter Morse code identification. Its omnidirectional ground beacon continuously transmitted pulse pairs on its assigned frequency, which the orbiter's receivers picked up and routed to the data processors to decode in order to compute bearing. The onboard units detected the phase angle between magnetic north and the position of the orbiter with respect to the ground station. Slant range was computed by measuring the elapsed time from when the onboard units emitted an interrogation pulse to a selected ground station and when the station responded with distance-measuring equipment pulses.[762]

The air data system provided information on the movement of the orbiter in the air mass, or flight environment. The orbiter was equipped with two air data probes, one on the left side and one on the right side of the vehicle (Figure No. B-126; see Figure Nos. B-65, B-66, B-67 for location on vehicle); both were within the lower forward fuselage. Each probe was fitted with four pressure-port sensors and two-temperature sensors. The pressure sensors sensed static

---

[758] USA, *Crew Operations*, 2.13-11 through 2.13-13.
[759] A reticle was a grouping of fine lines or fibers within the eyepiece of a sighting device.
[760] USA, *Crew Operations*, 2.13-14.
[761] *Endeavour* was upgraded to a three-string global positioning system. USA, *Crew Operations*, 2.13-2. The system was a space-based radio positioning navigation system. It provided three-dimensional position, velocity and time information to equipment on or near the surface of the Earth. The orbiter was fitted with three receivers for redundancy; each had two antennas. The antennas received the signals, which were then amplified through a preamplifier, and then routed through a combiner that merged the signals from both antennas into one data stream. This stream was then transmitted to the associated receiver for processing. USA, *Crew Operations*, 2.13-19, 2.13-20.
[762] USA, *Crew Operations*, 2.13-16, 2.13-17.

pressure and angle-of-attack upper, center, and lower pressures. The probes were stowed inside the fuselage during ascent, on-orbit, deorbit, and for the initial entry phases; they were deployed upon reentry when the vehicle's speed reached Mach 5 (five times the speed of sound). The system sensed air pressures related to the spacecraft's movement through the atmosphere in order to update the state vector in altitude, provide guidance in calculating steering and speed brake commands, and to provide display data for the commander's and pilot's flight instruments.[763]

The microwave landing system consisted of three onboard units, which were airborne navigation and landing aids with decoding and computational capabilities (Figure No. B-127; see Figure Nos. B-65 through B-68 for antenna locations). The system was used to determine slant range, azimuth, and elevation during the approach and landing phases of flight through the two ground stations alongside the landing runway. The onboard units received elevation data from the glide slope ground station, and azimuth and slant range from the azimuth/distance-measuring equipment ground station. Each microwave landing system unit was comprised of a Ku-band receiver, transmitter, and decoder. The three Ku-band antennas were located on the orbiter's upper forward fuselage; the transmitters and decoders were situated within the avionics bays.

Discovery contained two radar altimeters, which measured absolute altitude from the orbiter to the nearest terrain within the beam width of the vehicle's antennas. The two altimeters could operate simultaneously without adversely affecting each other. Each altimeter consisted of a transmitter antenna, a receiver antenna, and a receiver/transmitter. The four antennas were located on the lower forward fuselage, while the two receiver/transmitters were situated within the forward avionics bays. The data from these components were processed by the GPCs for display on the commander's and pilot's altitude flight tape and head-up displays.[764]

Guidance Hardware: The guidance subsystem of the orbiter consisted of software modules, which transformed crew commands and/or computed vector changes into steering commands, which then operated the thrust vector control, OMS/RCS, or aerosurfaces, as appropriate.

Flight Control System Hardware: The flight control system ascent and entry hardware provided manual guidance commands to GNC software, and responded to commands from the GNC software to effect vehicle and trajectory control. The system included three types of hardware: sensors responsible for flight control data, hardware to provide manual guidance commands, and hardware that responded to software commands. Sensors included the accelerometer assemblies, the orbiter rate gyro assemblies, and the SRB rate gyro assemblies. Manual guidance hardware included the rotational hand controllers, the translational hand controllers, the rudder pedal transducer assemblies, and the speed brake/thrust controllers. The

[763] USA, *Crew Operations*, 2.13-22, 2.13-23.
[764] USA, *Crew Operations*, 2.13-27.

hardware that responded to software commands included the ascent thrust vector control units and the aerosurface servoamplifiers.[765]

The orbiter contained four accelerometer assemblies, each of which had two identical single-axis accelerometers. One sensed the vehicle's acceleration along the lateral y-axis and the other sensed the vehicle's acceleration along the vertical z-axis. The four accelerometers were located within the forward avionics bays on the middeck. They provided acceleration feedback to the flight control system, which was used to augment stability during first-stage ascent, aborts, and entry, to relieve vehicle load during first-stage ascent, and to compute steering errors for display on the commander's and pilot's attitude director indicators. The y-axis readings enabled the control system to null any side forces during ascent and entry, while the z-axis readings augmented pitch control and indicated the need to relieve normal loads.[766]

Discovery also contained four rate gyro assemblies, each of which was fitted with three identical single-degree-of-freedom rate gyros. One of the gyros sensed roll rate (x-axis), one gyro sensed pitch rate (y-axis), and one gyro sensed yaw rate (z-axis). These rates were the primary feedback to the flight control system during ascent, entry, insertion, and deorbit; good feedback was required to maintain control of the vehicle. All four of the rate gyro assemblies were located on the vehicle's aft bulkhead, below the floor of the payload bay.[767]

There were three rotational hand controllers on the orbiter's flight deck: one at the commander's station, one at the pilot's station, and one at the aft flight deck station. Each was capable of controlling vehicle rotation about the roll, pitch, and yaw axes. The controllers at the commander's and pilot's stations were used during ascent to gimbal the SSMEs and the SRBs. During insertion, orbit, and deorbit, these controllers were used to gimbal the OMS engines or command the RCS thrusters. During the early part of entry, they could command the RCS jets; during the latter portion of entry, they controlled the orbiter's aerosurfaces. The controller on the aft flight deck could only be used while the vehicle was on orbit; it could gimbal the OMS engines and command the RCS jets.[768]

The translational hand controllers were used to command the RCS jets while the vehicle was on orbit. There were two translational hand controllers, one at the commander's station and one at the aft flight deck station. The controller at the commander's station was active during orbit insertion, on orbit, and during deorbit; the one in the aft flight deck station was only active on orbit. Each controller was capable of manually commanding the vehicle to move in the plus and minus directions for each of the orbiter's three axes. The aft controller was typically only used when the crewmember was looking out of the rear or overhead windows.[769]

---

[765] USA, *Crew Operations*, 2.13-27.
[766] USA, *Crew Operations*, 2.13-28.
[767] USA, *Crew Operations*, 2.13-30.
[768] USA, *Crew Operations*, 2.13-31, 2.13-32.
[769] USA, *Crew Operations*, 2.13-34.

The orbiter was equipped with two pairs of rudder pedals, one pair in the commander's station and one pair in the pilot's station; the two were mechanically linked so that movement on one pair moved the other pair. These pedals moved a mechanical input arm inside the rudder pedal transducer assembly, which contained three tranducers that generated an electrical signal proportional to the rudder pedal deflection. The rudder pedals were capable of commanding orbiter acceleration within the yaw direction by positioning the vehicle's rudder during atmospheric flight; however, because the flight control software automatically performed turn coordination during banking maneuvers, they were typically not used until after touchdown when the crew used them for nose wheel steering.[770]

There were two speed brake/thrust controllers on the orbiter, one in the commander's station and one in the pilot's station. These served two different functions. During ascent, the pilot's controller could be used to throttle the SSMEs; during entry, either could be used to control aerodynamic drag by opening or closing the speed brake. Each was located within the left-hand side of the stations. Each contained three transducers that produced a voltage proportional to the deflection.[771]

The ascent thrust vector control portion of the flight control system controlled the attitude and trajectory of the orbiter by directing the thrust of the SSMEs and the SRBs during lift off and first-stage ascent, and of the SSMEs during second-stage ascent. Ascent thrust vector control was provided by four avionics hardware packages that supplied gimbal commands and fault detection for each of the vehicle's hydraulic gimbal actuators. All four hardware packages were located within the aft avionics bays, and were connected to one of the aft MDMs.[772]

Discovery contained seven aerosurfaces that were used to control the vehicle during atmospheric flight (Figure No. B-128). Each aerosurface was driven by a hydraulic actuator, which was controlled by redundant sets of electrically driven servovalves, four per aerosurface.[773] These servovalves were controlled by electronic devices known as aerosurface servoamplifiers. There were four of these servoamplifiers, all located within the aft avionics bays. Each commanded one of the servovalves for each aerosurface, with the exception of the body flap, which only used three servoamplifiers. They also received feedback from the actuators, which included position and pressure signals. These paths between the servoamplifiers and the servovalves were called flight control channels. Each of the aerosurface servoamplifiers was hardwired to one of the aft MDMs.[774]

---

[770] USA, *Crew Operations*, 2.13-37.
[771] USA, *Crew Operations*, 2.13-38.
[772] USA, *Crew Operations*, 2.13-45, 2.13-46.
[773] The only exception to this was the body flap, which had three actuators that were hard-assigned to the three hydraulic systems. USA, *Crew Operations*, 2.13-42.
[774] USA, *Crew Operations*, 2.13-42, 2.13-45.

Landing/Deceleration System

Functions and Operations

Discovery's landing and deceleration system provided the crew with the capability to safely land the orbiter, and perform braking and steering operations. The system contained three landing gear, four brake assemblies, a nose wheel steering system, and a drag chute. The three landing gear were arranged in a tricycle configuration. There was one nose landing gear, located within the lower forward fuselage (Figure Nos. B-129, B-130), and two main landing gear, one each within the lower left and right wings adjacent to the midfuselage (Figure Nos. B-131, B-132). All three landing gear retracted forward and upward into their respective wheel well; each was held in the retracted position by an uplock hook.[775]

Discovery's landing and deceleration system was essentially dormant throughout a mission. At approximately 12 minutes prior to landing, the orbiter's speedbrake was opened to 81 percent. Roughly 11 minutes prior to landing, *Discovery's* onboard software repositioned the SSMEs to 10 degrees below nominal position, for drag chute deployment.[776] At approximately 4 minutes prior to touchdown, the speedbrake position was verified, and at 3 minutes prior to landing, the pilot verified that the landing gear extend isolation valve was open; at an altitude of 2,000' (about 33 seconds before landing), the commander or pilot armed the landing gear. This was accomplished by depressing a button on control panel F6 (commander) or control panel F8 (pilot), which energized the latching relays, and armed the pyrotechnic initiator controllers.

At an altitude of 300' (roughly 20 seconds before landing), when the air speed of the vehicle was below 312 knots, the commander or pilot deployed the landing gear, through a second pushbutton on their respective control panels (F6 or F8). At this point, hydraulic actuators released the uplock hooks, and the landing gear fell backwards, with the assistance of the strut actuators and aerodynamic loads, to their extended position, where they were locked in place by spring-loaded downlock bungees. The landing gear doors, which were connected to the gear by mechanical linkages, automatically opened as the gears fell. A bungee assembly exerted an additional force on the inside of the door over the first 2" of travel. The pyrotechnic actuator on the nose landing gear fired approximately 2 seconds after the uplock hook was released to ensure the doors opened in the event of high aerodynamic loads and a high angle of attack.[777] Each gear also had redundantly activated pyrotechnic systems for deploy in the event the hydraulics failed.[778] The pyrotechnic actuator accomplished the same action as the hydraulics with regard to

---

[775] USA, *Mechanical Systems*, 6-1.
[776] USA, *Crew Operations*, 2.14-12. The general purpose computers would alert the crew if repositioning efforts failed. Failure to reposition the SSMEs did not preclude drag chute deployment, but there was a possibility of the chute risers contacting and damaging the center engine bell. Therefore, for a repositioning failure, the drag chute would only deploy in a contingency situation. USA, *Crew Operations*, 5.4-6.
[777] USA, *Mechanical Systems*, 6-1.
[778] If a gear indicated it was still in the retracted position one second after the command to deploy was received, the dual pyrotechnic initiators would fire.

opening the uplocks and allowing the gear to deploy. Gear deploy, from initiation to the gear reaching the down and locked position, required roughly 5-6 seconds.[779]

At touchdown, the main landing gear tires made contact with the runway. When weight was sensed on the main landing gear, the brake/skid control boxes were enabled and the brake isolation valves opened to enable the brakes to become operational; this occurred roughly 1.9 seconds after weight on the main gear was sensed. The drag chute was deployed roughly 1 second later, after the orbiter's speed was reduced to around 195 knots (Figure No. B-133).[780] Drag chute deploy was performed so that full inflation of the chute occurred just prior to nose gear touchdown. Upon simultaneous arm and fire commands from the commander or the pilot, the pilot chute was deployed first, which in turn, extracted the main chute within 1 second. At this time, the main chute deployed to its roughly 40 percent reefed diameter. After approximately 3.5 seconds, the reefing ribbon was severed and the main chute inflated to its full 40' diameter. The drag chute was then jettisoned after the orbiter's speed was reduced to 60 (+/- 20) knots ground speed to prevent damage to the SSMEs.[781]

Roughly 10 seconds after touchdown, the nose landing gear made contact with the runway. The commander or pilot applied the brakes when either the orbiter had decreased to a speed of 140 knots, or when only 5,000' of runway remained, whichever occurred first. At roughly 32 seconds after touchdown, the pilot jettisoned the drag chute at the commander's call. Beginning at approximately 36 seconds after touchdown, the commander reduced pressure on the brakes until wheelstop, at which point, the speed brake was closed. The vehicle's nose wheel steering system became operational after three preconditions were met: weight on the main wheels was sensed, the vehicle had a pitch angle of less than 0 degrees; and weight on the nose gear was sensed. The anti-skid function was disabled once the speed of the orbiter dropped below 10-15 knots to prevent a loss of braking for maneuvering and/or coming to a complete stop.[782]

System Description

Each landing gear included a shock strut and two wheel and tire assemblies. The shock strut was constructed of stress- and corrosion-resistant, high strength steel and aluminum alloys, stainless steel, and aluminum bronze; urethane paint and cadmium-titanium plating were applied to all exposed steel surfaces. In addition, all exposed aluminum surfaces were covered with conventional anodizing and urethane paint.[783] The shock strut served as the primary source of shock attenuation at landing impact, and was fitted with conventional pneumatic-hydraulic shock

---

[779] USA, *Crew Operations*, 2.14-1 through 2.14-4. The landing gear would not be retracted until the orbiter was within its designated Orbiter Processing Facility, if it landed at KSC, or when it was being suspended by the Mate-Demate Device for attachment to the SCA, if it landed at Edwards AFB.
[780] USA, *Crew Operations*, 2.14-14, 5.4-7.
[781] USA, *Crew Operations*, 2.14-13. If the speed of the orbiter fell below 40 knots, the chute was retained until the orbiter came to a complete stop to minimize damage to the SSME nozzles.
[782] USA, *Crew Operations*, 2.14-7, 2.14-9.
[783] USA, *Crew Operations*, 2.14-2, 2.14-3; Jenkins, *Space Shuttle*, 408.

absorbers containing gaseous nitrogen and hydraulic fluid. However, these shock absorbers were unique in that the gaseous nitrogen and hydraulic fluid were separated by a floating piston to maintain absorption integrity and to assure proper performance.[784] Each strut had a strut actuator, which assisted in the deployment of the landing gear through hydraulic pressure; the actuator also served to retract the landing gear. The actuators included an oil snubber to control the rate of gear extension and prevent damage to the gear.[785] The nose landing gear was also fitted with a pyrotechnic boost system to ensure deployment in the event of high aerodynamic forces on the doors.[786]

Each landing gear had two wheels, which were constructed of forged aluminum and divided into two halves. The nose gear wheels co-rotated through a common axle; the main gear wheels rotated independently. The two nose landing gear wheels were fitted with 32" x 8.8" tires that each had a maximum allowable load of 45,000 pounds. These tires were rated for a 217-knot maximum landing speed, and could be reused once.[787] Each main landing gear wheel, two per gear, was fitted with a 46.25" x 16.8" to 21" tire that was comprised of sixteen cord layers in a cross-ply design. These tires had a maximum allowable load of 171,000 pounds per tire, or 220,000 pounds per strut. These tires were rated at a 225-knot maximum landing speed and could be used only one time.[788]

Each of *Discovery's* four main landing gear wheels was fitted with an electrohydraulic, carbon disc brake assembly, with an associated anti-skid system.[789] Included in each disc brake assembly were nine discs, five rotors, four stators, a backplate, a pressure plate, and eight hydraulic pistons. The carbon-lined rotors were splined to the inside of the wheel and rotated with the wheel; the carbon-lined stators were splined to the outside of the axle assembly and did not rotate with the wheel. The pistons were divided into two groups of four; each group received hydraulic pressure from a different hydraulic system. The brakes had a life-expectancy of twenty missions, assuming normal operating conditions.[790]

---

[784] The shock absorbers controlled the rate of compression and extension, as well as load application rates and peak values, to prevent damage to the vehicle. USA, *Crew Operations*, 2.14-2; Jenkins, *Space Shuttle*, 408; NASA, *Space Shuttle News Reference* (Washington, DC: U.S. Printing Office, 1981), 3-24.
[785] USA, *Mechanical Systems*, 6-1.
[786] Jenkins, *Space Shuttle*, 409.
[787] USA, *Crew Operations*, 2.14-3, 2.14-17; Jenkins, *Space Shuttle*, 409. Initially, the nose landing gear tires were manufactured by B.F. Goodrich and had a maximum load of 22,300 pounds, which was based on early vehicle specifications. As more data were obtained during the early Space Shuttle missions, Michelin won a contract to develop new tires. Jenkins, *Space Shuttle*, 409.
[788] USA, *Crew Operations*, 2.14-3; Jenkins, *Space Shuttle*, 410.
[789] The original four operational orbiters were originally fitted with beryllium brakes, with four rotors and three stators, that were designed based on the original predicted weight of the orbiter; the "as-built" weight was greater. During missions STS-5, STS-23, and STS-32, *Columbia* (STS-5/STS-32) and *Discovery* (STS-23) suffered severe stator damage; all missions prior to the *Challenger* accident experienced some brake damage. This prompted a redesign of the brakes, which were first installed on *Discovery* and flown on STS-35 (April 1990). Jenkins, *Space Shuttle*, 410-411.
[790] Jenkins, *Space Shuttle*, 410; USA, *Mechanical Systems*, 6-5. The description of the hydraulics system begins on page 146.

Each brake assembly was fitted with an anti-skid system that monitored the wheel velocity and controlled the brake pressure to prevent wheel lock and tire skidding. Speed sensors, two per wheel, supplied wheel rotational velocity information to the skid control circuits in the brake/skid control boxes. Here, the velocity of each wheel was continuously compared to the average velocity of all four main wheels, and adjustments were made as appropriate.[791]

Discovery's nose landing gear was fitted with a nose wheel steering system, which provided the crew with vehicle steering capability following nose wheel touchdown to supplement the directional control provided by aerodynamic forces on the rudder or by differential braking.[792] The system consisted of a steering actuator that responded to electronic commands from either the commander's or the pilot's rudder pedals, and was powered by the vehicle's hydraulic system. The system provided positive lateral directional control of the orbiter during post-landing rollout, even in the presence of high crosswinds and blown tires. Steering operations were conducted by applying heel pressure to the rudder pedal assembly.[793]

Discovery was fitted with a drag chute to assist the deceleration system in safely stopping the vehicle on the runway at either end of mission or abort weights. Design requirements specified that the chute be able to stop a 248,000 pound orbiter within 8,000' in atmospheric conditions of up to 103 degrees F and a 10 knot tailwind.[794] The drag chute was housed at the base of the vertical stabilizer and consisted of two individual chutes. The first was a 9'-diameter pilot chute, and the second was a 40'-diameter, partially reefed, main chute. The main chute was connected to the vehicle by a 41'-6" riser, and trailed the vehicle by approximately 89'-6". The drag chute was typically used on both lake bed and concrete runways, except when crosswinds exceeded 15 knots or if there was a SSME repositioning problem.[795]

Mechanical Systems

Discovery's mechanical systems were considered those components that had to be deployed, stowed, opened, or closed.[796] There were two types of mechanical systems: electromechanical and electrohydraulic; the former were driven by electrical actuators, the latter by hydraulic

---

[791] USA, *Crew Operations*, 2.14-7.
[792] NASA, *Shuttle News Reference*, 3-24. Originally, *Columbia* and *Challenger* had a nose wheel steering system that was ineffective at controlling the orbiter during rapid maneuvers at high speeds. The system was subsequently deactivated in each of these orbiters, and only the "plumbing, wiring, and fittings" for a steering system were installed in *Discovery* and *Atlantis*, while NASA investigated a solution. An improved steering system was first installed on *Columbia* for flight STS-32; it was later installed in *Discovery* (OMM-1, 1992) and *Atlantis* (OMM-1, 1994). The improved system was installed in *Endeavour* during its original build (1987-1991); *Challenger* was lost before the system could be installed. Jenkins, *Space Shuttle*, 409-410; Boeing, *OV-103, Volume II*, 54-55.
[793] Jenkins, *Space Shuttle*, 408; USA, *Mechanical Systems*, 6-6.
[794] Jenkins, *Space Shuttle*, 411.
[795] The drag chute could still be employed without repositioning the SSMEs if there were landing/rollout control problems. USA, *Crew Operations*, 2.14-4.
[796] Not all systems that used mechanical actuators were considered mechanical systems, for example, the Ku-band antenna, the star tracker doors, and the air data probes. USA, *Crew Operations*, 2.17-1.

actuators.[797] Major electromechanical systems included the active vent system, the external tank umbilical doors, the payload bay doors, the deployable radiator system, and the landing and deceleration system.

The common element for each electromechanical system was the electromechanical actuator, also known as the power drive unit. The vehicle's motor control assemblies, considered part of the EPS, directed the power to the actuator motors. Though each power drive was unique to its application, they shared a number of common characteristics, including two three-phase ac motors, motor brakes, a differential assembly, one or two torque limiters, a gearbox, and in most cases, various microswitches. The power drive units differed in arrangement of these items; some had separate torque limiters for each motor (e.g., radiator latches), while others utilized a single torque limiter downstream of the differential (e.g., payload bay door latches). The ET door centerline latches did not include torque limiters at all.[798] The ac motors provided the rotational shaft power that drove a piece of equipment to a particular position; typically, both motors ran at the same time.[799] Each motor was reversible to allow the component to be driven in both directions, either opened or closed, deployed or stowed, or latched or released. The brake in each motor prevented the output shaft from turning when the motor was unpowered. When power was removed from a motor, the brake locked the motor output shaft in a fixed position; once power was applied, the brake disengaged to allow the shaft to rotate.[800]

The differential assembly combined the two ac motor shaft outputs into one shaft input to the gearbox, allowing the system to continue to operate if one of the motors failed, or if one of the power sources to the motors was lost.[801] The torque limiter(s) protected the motor(s) from mechanical or structural damage in the event that a mechanism jammed by not allowing torque to be transmitted to the mechanism if the torque limit was exceeded. The gearbox provided the link between the differential assembly and the mechanism that was being driven. It included a series of reduction gears that transferred the low torque and high-speed output produced by the motors to a high torque and low speed input to the mechanism. The microswitches, also referred to as limit switches, were used to indicate the state of a mechanism (open/closed, stowed/deployed, or latched/released) and to turn off the motors once the mechanism was in the

---

[797] USA, *Mechanical Systems*, preface. With electromechanical systems, electrical energy was converted to mechanical energy through electrically powered motors. For the electrohydraulic systems, electrical signals commanded the hydraulic actuators; the APUs drove the hydraulic pumps by converting chemical energy to shaft power. The electrohydraulic systems are described within the APU/Hydraulics section of this report, beginning on page 146.

[798] USA, *Crew Operations*, 2.17-1; USA, *Mechanical Systems*, 1-1 through 1-3.

[799] If only one motor is operating, it is referred to as single motor drive. If both motors are operating, it is referred to as dual motor drive. The time required to drive equipment with a single motor is twice as long as with two motors. USA, *Crew Operations* 2.17-1; USA, *Mechanical Systems*, 1-3.

[800] USA, *Crew Operations*, 2.17-1; USA, *Mechanical Systems*, 1-2.

[801] USA, *Crew Operations*, 2.17-1; USA, *Mechanical Systems*, 1-2. The differentials were speed-summing (as opposed to torque-summing), so using a single motor took twice the amount of time to complete an operation, compared to the use of both motors.

desired position. Typically, there were two microswitches for each state, each associated with one of the two motors.[802]

Active Vent System

Discovery's active vent system equalized the orbiter's unpressurized compartments to the ambient environment during launch, ascent, orbit, entry, and landing. The system originally consisted of eighteen vents along the port and starboard sides of the orbiter, nine per side, each with a numeric designation from forward to aft (Figure No. B-134). Each vent was sized according to the volume to be vented; it took roughly five seconds for the vent doors to open or close (using both motors in a vent actuator).[803] Vents 1 and 2 were operated by the same power drive unit and vented the FRCS module and forward fuselage, respectively. Vents 3, 5, and 6 were used to vent the midfuselage and wings; each had their own power drive unit. Vents 8 and 9 were operated by the same power drive unit, and vented the OMS pods and aft fuselage, respectively.[804]

During prelaunch activities, Vents 1, 2, 8, and 9, and sometimes Vent 6 depending on payload requirements, were partially opened to allow purging of the associated compartments with dry air or nitrogen; all other vents were closed. The vents remained in this position until T-28 seconds, when the opening sequence began, and all of the doors were opened in a staggered sequence. All of the vents remained open while on-orbit until 20 minutes prior to "time of ignition" for the orbiter's deorbit burn, when all were closed. Immediately after closing, Vents 1, 2, 8, and 9 (on the port side only) reopened to vent hazardous gases in the event of a leak during the deorbit burn.[805] Approximately 5 minutes prior to entry interface (an altitude of roughly 400,000'), all of the vents were closed to protect the vehicle from ingesting hot plasmas during reentry. The vents were left closed until the vehicle reached a relative velocity of 2,400 feet per second (an altitude of about 80,000'), when all vents were opened. After the orbiter landed and came to a complete stop, the vents were reset to their prelaunch purge positions.[806]

External Tank Umbilical Doors

Discovery contained two external tank umbilical doors (Figure No. B-135), each of which sealed off one ET/orbiter umbilical cavity post-ET separation to prevent entry heating damage to the aft compartment. The doors were located on the underside of the orbiter at the forward end of the aft

---

[802] USA, *Crew Operations*, 2.17-1; USA, *Mechanical Systems*, 1-3.
[803] USA, *Crew Operations*, 2.17-2; USA, *Mechanical Systems*, 2-3.
[804] In the 1980s, Doors 4 and 7 on each side of the midfuselage were permanently capped shut and their associated actuators and mechanical linkages were removed. It was discovered through an engineering analysis that six of the ten vents within the midfuselage provided sufficient venting for that portion of the orbiter. *Atlantis'* were also removed; *Endeavour* never had the equipment installed. USA, *Crew Operations*, 2.17-3; USA, *Mechanical Systems*, 2-3, 2-4, 2-5.
[805] USA, *Mechanical Systems*, 2-5, 2-6.
[806] USA, *Crew Operations*, 2.17-1; USA, *Mechanical Systems*, 1-3, 2-7.

fuselage. Each door measured approximately 50” x 50”, and was covered with reusable TPS tiles and fitted with an aerothermal barrier. Each door contained a hinge assembly on its inboard side, and three uplock latch rollers near its outboard side. In addition, the outboard edge of each door contained two fittings, one for each of the two centerline latches.[807]

Prior to mating the ET to the orbiter in the VAB, the ET umbilical doors were opened and held in place with the two centerline latches. At approximately 8 minutes and 30 seconds after liftoff, MECO occurred and the ET was jettisoned from the orbiter. Once this was performed, the two centerline latches were stowed. This was completed by the pilot using controls located on panel R2 on the flight deck. The centerline latches rotated roughly 45 degrees to release the umbilical doors, and were then retracted into the underside of the orbiter. Then, a power drive unit in each door was activated to drive the doors closed, an operation that took roughly 24 seconds. Once the rollers were in range of the uplock latches, which were located within the umbilical cavity, they were captured by the latches to secure the doors after they were closed.[808]

Payload Bay Door System

The payload bay door system consisted of the two payload bay doors, twenty-six hinges (thirteen per door), sixteen centerline latches, sixteen bulkhead latches, and the payload bay door drive system. Payload bay door operations were controlled from switches on panel R13L in the aft flight deck in conjunction with the flight software.[809] Of the thirteen hinges that connected each payload bay door to the midfuselage, five were shear hinges and eight were floating hinges (Figure No. B-136).[810] Beneath the sill longeron of each payload bay door was a 55’-long torque shaft that was driven by a single power drive unit in order to open and close the door (Figure No. B-137). The torque shaft turned six rotary actuators, which transferred the motion via push rods and bellcranks that pushed the door open or pulled it closed; it took roughly 55 seconds to open or close each door. Each push rod extended from a rotary actuator through the sill longeron to its bellcrank, and was color-coded with silver and gold bands at intervals along its length that assisted the crew in determining how far the door was open. Each band represented approximately 17.5 degrees of rotation of the door about its hinges.[811] The door actuator is an exception in that it did not contain any limit microswitches. Instead, the limit switches for indicating that the door was closed were in four modules, two mounted on both the forward and

[807] The cavities contained the electrical and fuel umbilicals between the ET and the orbiter; the left contained those associated with the LH2, the right had those associated with the LO2. Each umbilical area contained a closeout curtain to prevent hazardous gases from entering the orbiter’s aft fuselage. USA, *Crew Operations*, 2.17-5; USA, *Mechanical Systems*, 3-3, 3-5.
[808] USA, *Mechanical Systems*, 3-5 through 3-7.
[809] USA, *Mechanical Systems*, 4-2, 4-9.
[810] Fixed hinges held the attach point on the payload bay door to a constant location relative to the midfuselage and only allowed rotation about the axis of the hinge pin. Floating hinges allowed translation along and rotation about the axis of the hinge pin. Since these hinges allowed translational movement, orbiter shape changes due to thermal expansion and contraction did not apply loads to the doors. USA, *Mechanical Systems*, 4-2.
[811] USA, *Mechanical Systems*, 4-2, 4-6. This information could also be used to determine if the door was warped or jammed. USA, *Crew Operations*, 2.17-13.

aft bulkheads of the payload bay, each near a door hingeline. The open microswitches were contained within the forward- and aft-most rotary actuators. Locating the end-of-travel microswitches at the extreme ends of the door provided a better indication that the door was in the correct position (i.e., not warped).

The payload bay doors were held closed by thirty-two latches: sixteen centerline latches, eight forward bulkhead latches, and eight aft bulkhead latches (Figure No. B-138). The centerline latch actuators, and structural and seal overlap, were fitted on the starboard door, therefore it was always opened first and closed last. The centerline latches, numbered 1 through 16 from forward to aft, were grouped into four sets, or "gangs," of four latches, each group driven by its own common actuator. The starboard door contained the latch hooks, while the port door contained the latch rollers; the hooks were the active portion of the centerline latch system that rotated to grasp the latch rollers. Each gang was driven by a single power drive unit, and it required approximately 20 seconds to open or close a gang of latches.[812] Like the centerline latches, the bulkhead latches were also grouped into four gangs of four latches, two at the forward bulkhead and two at the aft bulkhead, one gang on the starboard door and one gang on the port door. The latches in each gang were numbered 1 through 4, starting with the latch closest to the hinge line. The latch hooks for each gang were on the forward and aft edges of the doors, while the latch rollers were situated on the forward and aft bulkheads. Each gang was driven by one power drive unit; the operation required roughly 25 seconds. The motion of the latches in each gang was in a slightly staggered sequence: they latched in ascending order and unlatched in descending order.[813]

The payload bay doors were opened once the vehicle was in orbit, approximately 1 hour and 25 minutes after liftoff. First, a check for any failures, in components such as OMS engines, communications, or the ECLSS that would require first day landing, was conducted. If there were no failures of this nature, the payload bay doors were unlatched and opened in a specific sequence to accommodate any thermal expansion/contraction, bending, or twisting of the doors. Nominally, all latches were opened two gangs at a time, beginning with centerline latches 5 to 8 and 9 to 12. Opening the middle sets of latches relieved any tension on the doors. Next, centerline latches 1 to 4 and 13 to 16 were opened to relieve any tension on the bulkhead latches. After the centerline latches were opened, the starboard forward and aft bulkhead latches were opened together, allowing the starboard door to be driven open. Following this operation, the port forward and aft bulkhead latches were opened. Finally, the port door was opened.[814]

The payload bay doors were closed approximately 2 hours and 40 minutes prior to the deorbit burn. The closing sequence was the reverse of the opening sequence. First, the port door was closed, followed by the port forward and aft bulkhead latches. Next, the starboard door was commanded closed. The door was stopped just before it reached the port door, which allowed the

---

[812] USA, *Mechanical Systems*, 4-4.
[813] USA, *Mechanical Systems*, 4-5.
[814] USA, *Mechanical Systems*, 4-12, 4-13.

crewmembers to check the centerline latch trajectory and verify that an overlap condition did not exist. Once cleared, the starboard door was driven closed, followed by the starboard forward and aft bulkhead latches. Then, the centerline latching sequence began with latches 1 to 4 and 13 to 16. In the event that the payload bay doors became slightly warped, these gangs were easier to latch than the middle gangs because the bulkhead latches had already been latched. Finally, latches 5 to 8 and 9 to 12 were closed.[815]

Orbital Maneuvering System

Function and Operations

Once *Discovery* reached orbit, the vehicle did not require any form of propulsion to keep it circling around the Earth. However, the main propulsion system was designed to cut off prior to the vehicle reaching its specified orbit.[816] Therefore, *Discovery* was fitted with an OMS, which provided the required thrust for the vehicle to achieve orbit (referred to as orbit insertion). In addition, the OMS provided the necessary propulsion for on-orbit operations, such as orbit circularization, orbit transfer, and rendezvous; and for the vehicle's deorbit burn.[817]

The OMS system was controlled either through the digital autopilot or by manual operation. Typically, the system was first activated roughly 35 minutes into the flight, when the commander or pilot loaded the targets for the OMS 2 burn into the software system.[818] Approximately 37 minutes after liftoff, both OMS engines were fired to insert the vehicle into the designated orbit. The burn duration varied greatly, but usually lasted about two minutes. Afterwards, the engines were shut down, the thrust control vector gimbals were checked, and the OMS valves were reconfigured for on-orbit operations.[819]

The OMS engines operated in the following manner. First, pressurized helium was directed through supply lines to the fuel and oxidizer storage tanks, which forced the propellants into their respective feed lines.[820] Just prior to reaching the engine, the propellants were directed into the bipropellant valve assembly; each fuel/oxidizer valve pair was mechanically linked to open and

---

[815] USA, *Mechanical Systems*, 4-14.
[816] Baker, *Manual*, 124.
[817] USA, *Crew Operations*, 2.18-1. Orbit circularization was a maneuver to change the vehicle's orbit from an elliptical path to a circular path. A "burn" was essentially a firing of the engine.
[818] If a mission was deemed "performance-critical," an OMS assist burn was conducted during the nominal ascent. This burn lasted roughly 1 minute, 42 seconds and provided 250 additional pounds of thrust. USA, *Crew Operations*, 5.2-1, 5.2-2. A post-main engine cutoff OMS burn, referred to as OMS 1, could be conducted about 10 minutes, 30 seconds into the flight, if the proper altitude was not reached with the SSMEs. During many early missions, an OMS 1 burn was performed as part of nominal operations, but later missions phased out the use of this burn in favor of completing a "direct insertion," with the SSMEs powering the vehicle to a higher orbit. USA, *Crew Operations*, 5.2-3.
[819] USA, *Crew Operations*, 5.2-4, 5.2-5.
[820] The single helium tank in each OMS pod pressurized both the fuel and the oxidizer tanks, a design that helped ensure the tanks were at the same pressure, thus avoiding incorrect mixture ratios. USA, *Crew Operations*, 2.18-9.

close together through a control valve. These control valves were operated by pressurized nitrogen, fed from the tank near the engine's thrust chamber.[821]

After passing through the bipropellant valve assembly, the oxidizer was fed directly to the injection plate within the thrust chamber. The fuel, however, was first routed through cooling lines within the chamber wall to cool the engine. Once the propellants exited their respective feed lines onto the thrust chamber injection plate, they atomized and ignited on contact. This reaction created a hot gas that exited the thrust chamber and expanded through the engine's nozzle, creating roughly 6,087 pounds of thrust.[822]

Following an OMS burn, the nitrogen system was used to purge the engine's fuel lines. This operation, which lasted about two seconds, cleared the lines of any residual fuel by forcing it through the inlet lines, cooling lines, and out through the engine. This prevented the propellants from freezing in lines in the event that an immediate restart of the engines was required.[823]

While the vehicle was on orbit, the OMS was used to modify the orbit for rendezvous, payload deployment, or transfer to another orbit; these burns could use either both or only one engine. Typically, critical maneuvers, or maneuvers that required large velocity changes, were conducted using both engines. In such an instance, the thrust vector of both engines was directed parallel to the orbiter's x-axis. However, burns that required a velocity of just over 6 feet per second could be accomplished with a single engine; its thrust vector was directed through the vehicle's center of gravity. The use of a single OMS engine required the use of the RCS system to control roll movement.[824]

The OMS engines were both used for the final time to perform the vehicle's deorbit burn. About 40 minutes prior to the burn, the OMS thrust vector control gimbals were checked and the OMS valve switches were placed in the pre-burn configuration. Roughly 2 minutes before the burn, the OMS engine switches on the control panels were set to their "armed position;" ignition was triggered approximately 15 second before the burn. The deorbit burn lasted two to three minutes, dependent mostly on the vehicle's orbital altitude. Afterwards, the OMS valves were closed and the engine gimbals were powered down.[825]

System Description

The OMS was comprised of two engines, two N_2O_4 (oxidizer) tanks, two MMH (fuel) tanks, a propellant pressurization subsystem, a pressurized nitrogen valve subsystem, associated plumbing and control components, and a thrust vector control system (Figure No. B-139). The

[821] USA, *Crew Operations*, 2.18-3, 2.18-7.
[822] USA, *Crew Operations*, 2.18-4, 2.18-5.
[823] USA, *Crew Operations*, 2.18-9.
[824] USA, *Crew Operations*, 2.18-7, 2.18-9. For velocity changes less than 6 feet per second, the RCS system was used. This system is described in further detail beginning on page 205.
[825] USA, *Crew Operations*, 5.4-3, 5.4-4.

OMS was housed within two independent pods on each side of the orbiter's aft fuselage, which also held the aft RCS. The pods were designed to be reused for up to 100 missions, with only minor repair, refurbishment, and maintenance; they were removable to facilitate orbiter turnaround.[826]

Each OMS pod contained one engine and all of the hardware needed to pressurize, store, and distribute the propellants to operate that engine. The engine was installed in the aft end of the pod, had a size of 77" x 46", and was capable of producing roughly 6,087 pounds of thrust. The engine was fitted in a gimbal mount, which allowed it to pivot left and right (yaw), and up and down (pitch). The main components of the engine were the bipropellant valve assembly, the injector plate, the thrust chamber, and the nozzle.[827]

The bipropellant valve assembly regulated the flow of the propellants to the engine. It consisted of two fuel valves in series and two oxidizer valves in series; each fuel valve was mechanically linked to an oxidizer valve so that they opened and closed at the same time. The dual valves provided redundant protection against leakage, and also required that both valves be open for the propellant to reach the engine. The fuel and oxidizer were mixed at the injector plate; which was located within the engine's thrust chamber. The chamber walls contained 120 cooling channels through which the fuel was routed to cool the engine prior to reaching the injector plate; the oxidizer line went directly to the plate. The nozzle was bolted to the aft flange of the thrust chamber, and served as an expansion area for the hot gas produced by the reaction between the fuel and oxidizer.[828]

The movement of the engine was controlled either from the digital autopilot or from the manual controls through the thrust vector control system, which consisted of a gimbal ring assembly, two gimbal actuator assemblies, and two gimbal actuator controllers. The gimbal ring assembly contained two mounting pads to attach the engine to the gimbal ring, and two pads to attach the gimbal ring to the orbiter. There was one gimbal actuator assembly for pitch and one for yaw control. Each actuator contained a primary and secondary motor and drive gears. The primary and secondary drive systems were isolated and never operated concurrently. The gimbal assembly provided control angles of +/- 6 degrees for pitch and +/-7 degree for yaw.[829]

Adjacent to the thrust chamber in the engine was a spherical gaseous nitrogen storage tank. Gaseous nitrogen was used to operate the engine control valves and to purge the fuel lines at the end of each burn. Aside from the tank, the engine's nitrogen system contained an engine pressure isolation valve, a regulator, a relief valve, a check valve, an accumulator, engine purge valves, bipropellant solenoid control valves, and actuators to control the bipropellant ball valves. The dual-coil, solenoid-operated engine pressure isolation valve permitted the flow of nitrogen from

---

[826] USA, *Crew Operations*, 2.18-1.
[827] USA, *Crew Operations*, 2.18-1, 2.18-3.
[828] USA, *Crew Operations*, 2.18-3 through 2.18-6.
[829] USA, *Crew Operations*, 2.18-20, 2.18-21.

the tank into a regulator. The regulator, located between the engine pressure isolation valve and the bipropellant control valves, reduced the nitrogen pressure from its tank pressure (as high as 3,000 psig) to the desired working pressure (315-360 psig). A pressure relief valve was located downstream of the regulator to limit the pressure to the engine bipropellant control valves and the actuators in the case of a regulator malfunction. The check valve was also located downstream of the regulator; it was closed in the event that gaseous nitrogen pressure was lost on the upstream side of the check valve. The accumulator, which had a volume of roughly 19 cubic inches, provided pressure to operate the engine bipropellant control valves at least one time with the engine pressure isolation valve closed. The solenoid-operated control valves allowed the nitrogen to control the bipropellant control valve actuators and bipropellant ball valves. The actuator contained a rack-and-pinion gear that converted the linear motion of its connecting arm into rotary motion, which drove the bipropellant ball valves, allowing the propellants to enter the thrust chamber.[830]

Each OMS pod had a helium pressurization system that consisted of one high-pressure gaseous helium storage tank, two helium pressure isolation valves, two pressure regulator assemblies, parallel vapor isolation valves on the regulated helium pressure lines to the oxidizer tank only, dual series-parallel check valve assemblies, and pressure relief valves. The helium tank pressurized both the fuel and oxidizer tanks. An advantage to this was that it helped ensure each propellant tank remained at the same pressure, thus avoiding incorrect mixture ratios. The two helium pressure valves, arranged in parallel, isolated the helium tank from the propellant tanks and provided redundant paths to the tanks. Below each pressure valve was a pressure regulator to reduce the helium source pressure (often as high as 4,800 psia) to a working pressure of roughly 250 psig. The vapor isolation valves were located in the helium line to the oxidizer tank to prevent oxidizer vapor from migrating into the fuel system and causing a premature hypergolic reaction. The check valve assembly contained four independent check valves comprised of two series of two valves in a parallel configuration. The parallel path permitted path redundancy, while the series arrangement provided redundant backflow protection. The pressure relief valves were located downstream of the check valves; they protected the propellant tanks from overpressurization.[831]

Each engine had its own MMH and N_2O_4 tank, which stored the propellants in liquid form. The tanks were components of the overall OMS propellant storage and distribution system, which also contained the required propellant feed lines to each engine, as well as the crossfeed lines, isolation valves, and crossfeed valves between the two OMS pods. The fuel and oxidizer were each stored in a domed cylindrical titanium tank. The tanks, which were pressurized by the helium system, were divided into forward and aft compartments. In the aft compartment was the propellant acquisition and retention assembly. This consisted of a mesh screen that divided the two compartments, and an acquisition system. Pumps were not used to feed the propellants to the engines. Instead, the propellant tanks were pressurized with helium to maintain the flow.

[830] USA, *Crew Operations*, 2.18-6 through 2.18-9.
[831] USA, *Crew Operations*, 2.18-9 through 2.18-11.

Propellants from one pod could be passed to the other through crossfeed lines; the propellants could also be shared with the aft RCS engines by completing what was referred to as an "interconnect."[832]

The OMS propellant storage and distribution system contained tank isolation valves that were arranged in parallel, and were located in each pod between the propellant tanks and the engine and the crossfeed valves; they permitted propellant to be isolated from the rest of the downstream systems. The valves were driven open and closed by ac motors. The crossfeed lines were used to send propellant from one pod to the other to either balance the propellant weight in each pod or in the event of an engine failure.[833] The crossfeed lines connected the left and right propellant lines at a point between the tank isolation valves and the bipropellant valves. Each crossfeed line had two crossfeed valves, arranged in parallel to provide redundant paths for propellant flow.[834]

Although the propellants remained in liquid form within the temperatures normally experienced during a mission, heaters were provided to prevent freezing during long periods in orbit when the system was not in use. This system consisted of strip heaters and insulation on the interior surface of the pod, and wraparound heaters and insulation on the crossfeed lines. The OMS heaters were divided into three segments: left pod, right pod, and crossfeed lines. Each pod was divided into eight heater areas; the crossfeed lines were divided into eleven heater areas.[835]

Reaction Control System

Functions and Operations

While the OMS was used for major velocity changes, the RCS thrusters were generally used for small (less than 6 feet per second) velocity changes.[836] In addition, the RCS provided thrust for attitude control and rotational maneuvers. Each jet was permanently fixed to fire in a specific direction: up, down, left, right, forward, or aft. The selective firing of individual thrusters or specific combinations provided thrust for attitude control, rotational maneuvers along all three axes (roll, pitch, and yaw), and small velocity changes along the orbiter's axes. The thrusters were used to correct OMS burns, augment aerodynamic flight during reentry, conduct small rotational and translational maneuvers for rendezvous and docking, provide changes to orbital parameters, and trim reentry burn.[837]

The RCS thrusters were first used to maintain attitude hold between MECO and ET separation. Once the ET was released, the thrusters provided a translation maneuver in the negative z

[832] USA, *Crew Operations*, 2.18-12.
[833] They could also be used to feed the RCS, but through different valves. USA, *Crew Operations*, 2.18-16.
[834] USA, *Crew Operations*, 2.18-15, 2.18-16.
[835] USA, *Crew Operations*, 2.18-19, 2.18-20.
[836] Baker, *Manual*, 126.
[837] USA, *Crew Operations*, 2.22-1.

direction to move the orbiter away from the tank. The RCS then continued to hold the vehicle's attitude until the time of the OMS 2 burn.[838] While the vehicle was on orbit, either the RCS primary or vernier thrusters could be used for attitude control or hold, as required.[839]

Prior to the deorbit burn, *Discovery's* crew used the RCS thrusters to maneuver the vehicle to the desired attitude. Following the burn, the thrusters were used to null any residual velocities, as necessary. The RCS was also then used to orient the orbiter to the proper entry interface attitude. Once the vehicle reached an altitude of 400,000', only the aft RCS thrusters were used to control its roll, pitch, and yaw (the forward RCS thrusters were automatically deactivated); the aft thrusters were deactivated when the orbiter reached an altitude of roughly 45,000'.[840]

System Description

The RCS was distributed among three components of the orbiter: the FRCS module, which was located in the nose area of the orbiter, and the left and right OMS pods, mounted to the vehicle's aft fuselage.[841] The system, as a whole, contained forty-four RCS thrusters, thirty-eight of which were considered primary thrusters and six of which were considered vernier thrusters (Figure No. B-140). There were sixteen thrusters (fourteen primary and two vernier) in the forward module, and twenty-eight between the two rear modules (twelve primary and two vernier in each pod). All thrusters used MMH and N_2O_4 as their fuel and oxidizer, respectively.[842] Each module also contained its own propellant storage tanks, and propellant distribution network.

The primary thrusters each had a thrust of 870 pounds and a chamber pressure of 152 psia. A primary thruster had a nominal lifetime of 100 missions, with 20,000 starts and 12,800 seconds of accumulated time. It could operate for 150 continuous seconds, or a minimum pulse burn of 0.08 seconds, and had a maximum single-mission contingency of 300 seconds (forward thrusters) and 800 seconds (aft thrusters). The multiple primary thrusters provided redundancy to the system. Each vernier thruster had a thrust of 24 pounds and a chamber pressure of 110 psia, with a nominal lifetime of 330,000 starts and 125,000 seconds of accumulated time. Each thruster could run for up to 275 seconds of continuous operation in any two-hour period, or a minimum pulse burn of 0.08 seconds. The vernier thrusters were not redundant.[843]

---

[838] The system could also be used to complete the "OMS 2" burn if one of the OMS engines failed. USA, *Crew Operations*, 5.2-4. During an OMS burn, the RCS was typically inactive, unless they OMS gimbal rates or limits were exceeded, requiring RCS roll control, or if only one OMS engine was being used. USA, *Crew Operations*, 2.22-17.
[839] USA, *Crew Operations*, 2.22-17, 5.3-4.
[840] USA, *Crew Operations*, 2.22-17. The system could also be used to complete the deorbit burn if one of the OMS engines failed.
[841] See the description of the FRCS module beginning on page 129, and the description of the OMS pods beginning on page 137.
[842] USA, *Crew Operations*, 2.22-2.
[843] USA, *Crew Operations*, 2.22-3; Jenkins, *Space Shuttle*, 391.

The major components of each RCS thruster were the reaction jet driver, the fuel and oxidizer valves, the injector head assembly, the combustion chamber, the nozzle, and the electrical junction box. The reaction jet driver converted commands from the GPCs into the required voltage for opening the bipropellant valves. This allowed the fuel and oxidizer to flow into the injector head assembly, which directed the propellants into the combustion chamber. The injector head assembly for each primary thruster had eighty-four injector hole pairs; each pair contained one hole for the fuel and one hole for the oxidizer. Additional fuel holes were provided near the outer edge of the injector for cooling the combustion chamber walls. The injector head assembly for each vernier thruster had only a single pair of injector holes.[844]

The combustion chamber of each RCS thruster was constructed of columbium, and had a columbium disilicide coating to prevent oxidation. At the combustion chamber, the fuel and oxidizer were combined to produce hypergolic combustion, or hot gas thrust; the hot gas expanded through the nozzle. The nozzle of each thruster was tailored to match the external contour of the FRCS module, or the left and right aft RCS pods; therefore, the thrusters were generally not interchangeable. Each thruster nozzle was radiation-cooled; insulation was provided around the combustion chamber and nozzle to prevent excessive heat from reaching the orbiter's structure. The electrical junction box in each thruster contained electrical connections for a heater, a chamber pressure transducer, oxidizer and fuel injector temperature transducers, and the propellant valves.[845]

Each group of RCS thrusters, one forward and two aft, had its own propellant system that distributed the fuel and oxidizer to the various thrusters. Each system consisted of a fuel and oxidizer tank, tank isolation valves, manifold isolation valves, crossfeed valves, distribution lines, and filling and draining service connections.[846] Each propellant tank was spherical in shape; the fuel tank held roughly 923 pounds of MMH, and the oxidizer tank held about 1,464 pounds of N_2O_4. The tanks were pressurized with gaseous helium, which expelled the propellant from an internally mounted, propellant acquisition device.[847] This device, necessitated by the various orientations of the orbiter throughout a mission, acquired and delivered the propellant to the RCS thrusters. The acquisition devices in the FRCS propellant tanks were designed to operate primarily in low-gravity environments, while those in the aft propellant tanks could operate in both high- and low-gravity environments.[848] The tank isolation valves isolated the propellant tanks from the remainder of the distribution system. They were located between the tanks and the manifold isolation valves, and consisted of a ball flow control device and an actuator assembly. The manifold isolation valves for each manifold of thrusters were positioned

---

[844] USA, *Crew Operations*, 2.22-3.
[845] USA, *Crew Operations*, 2.22-3.
[846] The tanks for the forward structures were mounted directly within the FRCS module; the tanks for each set of aft thrusters were situated within the main section of the OMS pod, instead of the RCS housing.
[847] Each RCS module had two gaseous helium tanks, one to pressurize the fuel tank and the other to pressurize the oxidizer tank. USA, *Crew Operations*, 2.22-9.
[848] USA, *Crew Operations*, 2.22-4. The propellant tanks in the aft pods also incorporated an entry collector, sumps, and gas traps to ensure proper operation during abort and entry mission phases.

between the tank isolation valves and the thruster. The two aft RCS modules were also connected by crossfeed lines, which allowed the transfer of propellant between the modules.[849]

Electrical heaters were provided in the FRCS and the OMS/RCS pods to maintain the propellants at safe operating temperatures, and to maintain safe operating temperatures for the injector of each primary and vernier RCS jet. The FRCS contained six heaters mounted on radiation panels in six locations; each OMS/RCS pod was divided into nine heater zones, each of which was controlled by redundant heater systems.[850]

Additional Systems

Discovery also contained a variety of systems that helped ensure the safety of the crew, and maintained the living and working environment of the vehicle while on orbit. Such systems included the closed circuit television system, various crew systems, the lighting system, the payload deployment and retrieval system, the payload and general support computer, the waste management system, and the extravehicular activities systems.

Escape Systems

Escape systems, in general, referred to equipment and systems that were intended to facilitate emergency and contingency egress of the flight crew from the vehicle. The systems included equipment worn by the crewmembers, hardware built into the orbiter, and external systems located on the launch pad. The types of escape or emergency egress from the orbiter depended upon the phase of the mission: prelaunch, in-flight, or post-landing. Prelaunch emergency egress occurred while the orbiter was still positioned on the launch pad. For prelaunch emergency egress, the crew opened the side hatch and exited the vehicle into the white room on the launch pad.[851] In-flight emergency egress required the vehicle to be in a controlled glide, at an altitude of 30,000’ or below; post-landing emergency egress followed an emergency landing or a landing at a contingency location. There were three methods of escape from the orbiter, one of which was for in-flight escape and the other two were typically for stationary escapes.

The in-flight bailout procedure was usable when the orbiter was in a controlled, gliding descent. This procedure could be used during the ascent or entry phase of flight, if the orbiter was unable to reach a suitable landing site. In such an event, cabin depressurization was begun at an altitude of roughly 40,000’; then at approximately 30,000’, the side hatch was jettisoned with pyrotechnic charges. An extendable crew escape pole, mounted within the middeck, was used to

---

[849] USA, *Crew Operations*, 2.22-6, 2.22-7. The aft RCS thrusters could also be fed from the OMS engine fuel and oxidizer tanks.
[850] USA, *Crew Operations*, 2.22-11.
[851] USA, *Crew Operations*, 2.10-1. For a description of the launch pad egress systems, see Patricia Slovinac. “Cape Canaveral Air Force Station, Launch Complex 39, Pad A (John F. Kennedy Space Center,” HAER No. FL-8-11-F, Historic American Engineering Record (HAER), National Park Service, US Department of the Interior, August 2010.

guide the crewmembers through the hatch, and down a trajectory that cleared the vehicle's left wing, beneath and away from the vehicle. The pole consisted primarily of a curved, spring-loaded, telescoping steel and aluminum cylinder with an aluminum housing. It was fitted with a magazine near the port end of the pole that held eight lanyards, which guided crewmembers down the pole (Figure B-141).[852]

Post-landing, there were two exit options. The first was to open the side hatch and release an emergency egress slide, which provided a means of descent for the crew (Figure B-142). This equipment consisted of an inflatable slide, a pressurized Argon bottle, an aspirator, a girt bracket, and a slide cover, all of which were attached as an assembly below the side hatch. The slide could be deployed by attaching it to the hatch (if still in place) or by rotating it into the hatch opening (if the hatch had been jettisoned). The slide was inflated by pulling a lanyard that activated the pressurized Argon bottle.[853]

The secondary option was through the port side overhead window on the flight deck, which was jettisoned with pyrotechnic charges; it was used in the event that egress through the side hatch was not possible. The jettison system consisted primarily of expanding tube assemblies, mild detonating fuses, frangible bolts, and associated initiators. A ring handle on the center console activated the system; the system could also be activated by ground rescue personnel via a T-handle on the starboard side of the vehicle. The outer window pane (there were three total) was jettisoned first; the inner window frame (containing two pressure panes) was released 0.3 seconds later and rotated into the crew compartment, via hinges. Seat No. 4, one of the mission specialist seats on the flight deck, was used by the crewmembers to climb through the window. As each crewmember exited the vehicle, he or she connected themselves to the descent device, essentially a controlled tether called a "Sky Genie," which enabled him or her to reach the ground over the starboard side of the orbiter (Figure B-143).[854]

During launch and landing, each crewmember wore an advanced crew escape suit, which was designed to protect the crewmember in the event of a loss of cabin pressure, extreme environmental conditions, and a contaminated atmosphere (Figure B-144). The suit consisted of numerous components, each with a specific function. There was an inner pressure bladder, fabricated of Gore-Tex, that was capable of wicking moisture and vapor away from the body when unpressurized. An outer covering, made of an orange Nomex material, protected the crewmember from flames, and provided a highly visible target if search and rescue operations were necessary. On the upper right leg of the suit was a bioinstrumentation pass-thru, which provided an opening for medical lines and water cooling lines; the water was cooled in an individual cooling unit mounted to the crewmember's seat. The suit included detachable gloves,

---

[852] USA, *Crew Operations*, 2.10-1, 2.10-13; USA, *Crew Escape Systems* (Houston: United Space Alliance, 2005), 3-30 through 3-33.
[853] USA, *Crew Operations*, 2.10-1, 2.10-13; USA. *Crew Escape,* 3-33 through 3-41.
[854] USA, *Crew Operations*, 2.10-1, 2.10-18; USA. *Crew Escape,* 3-18 through 3-30. The Sky Genie could also be used by crewmembers exiting through the side hatch, in the event of an egress slide failure.

which mated to the sleeves via metal-mating rings that provided an air-tight seal and allowed the gloves to swivel for improved mobility; a similar ring was used for the helmet attachment. The helmet provided a pressurized breathing volume for the crewmember. It was fitted with a clear, rotating pressure visor that sealed the helmet cavity. At the lower right rear of the helmet was an antisuffocation valve, which opened if the oxygen supply to the suit was lost. The helmet also provided an interface for communications.[855]

Each crewmember was issued a parachute harness and parachute for emergency egress. The parachute harness contained a system of interwoven nylon straps worn by the crewmember during launch and entry. It also held an emergency oxygen system, a locking carabiner, a life preserver unit, and emergency drinking water. The parachute assembly was installed into the orbiter as a seat back cushion, and was attached to the harness during crewmember strap-in. The personal parachute assembly contained parachutes (18”-diameter pilot chute, 4.5’-diameter drogue chute, 26’-diameter main canopy), risers, and actuation devices for both automatic and manual deployment of the parachutes. It also contained a personal life raft compartment with a life raft and a personal locator beacon. In the event of an inflight bailout, the crewmember exited their seat with the parachute assembly; if the bailout led to a water landing, the risers were automatically released from the harness once the crewmember was immersed in the water. During a ground egress, the crewmember manually released the four attach points, leaving the parachute assembly in their seat.[856]

Closed Circuit Television System

Discovery’s closed circuit television (CCTV) system was used while the vehicle was in orbit to provide support to both orbiter and payload activities. Such activities included transmitting real-time and recorded video from the orbiter to Mission Control through the S-band FM, S-band PM, or Ku-band (analog or digital) communications systems. The crew had the capability to control nearly all of the CCTV system’s operations. Mission Control could execute most configuration commands, with the primary exceptions being those for loose CCTV equipment, such as camcorders, video tape recorders, and wireless video system components.[857] The CCTV system consisted of video processing equipment, TV cameras, pan/tilt units, camcorders and video tape recorders, color television monitors, and all of the cabling and accessories required by the components to work together.[858]

The key piece of video processing equipment was the video control unit, which served as the central processor/controller for the CCTV system. The video control unit consisted of the remote control unit and the video switching unit, both of which were located behind the R17 and R18

[855] USA, *Crew Operations*, 2.10-4 through 2.10-6; USA. *Crew Escape*, 2-2 through 2-21.
[856] USA, *Crew Operations*, 2.10-6 through 2.10-10; USA. *Crew Escape*, 2-22 through 2-31.
[857] The requirements for the CCTV and camera configurations are specified in the Flight Requirements Document created for each shuttle flight. USA, *Crew Operations*, 2.3-1.
[858] The camcorders and video tape recorders were hand-held, commercial off-the-shelf devices, used to record activities within the crew compartment. USA, *Crew Operations*, 2.3-11 through 2.3-14.

panels in the aft flight deck. The remote control unit received all CCTV commands from both the crew and Mission Control. The video switching unit was used to route a video from its source to its destination; it could accommodate up to fourteen video inputs and seven video outputs.[859] Other pieces of video processing equipment included the video processing unit, the digital television system, and the sequential still video system. The video processing unit provided two video signals from the orbiter's CCTV system to the ISS and one video signal from the ISS to the orbiter. It also included the wireless video system interface box, which provided the connection between the wireless extravehicular activity helmet camera system and its associated crew cabin laptop.[860] The digital television system allowed the crew to downlink a video signal in a digital format via the Ku-band system. Its hardware was comprised of a vertical interval processor, a Sony video tape recorder, and a multiplexer. The sequential still video system was used by the orbiter to send sequential snapshots of a video signal to Mission Control through the S-band PM system during Ku-band loss of signal periods.[861]

There were three different types of stationary cameras that were considered part of the CCTV system; all were mounted within the payload bay. The three types were the color television camera, the intensified television camera, and the Videospection camera. The color television camera measured 16"-long x 5.88"-wide x 5.94"-high; the lens was encased within the housing. It had a minimum horizontal field-of-view of 9 degrees, and a maximum of 77 degrees. Images taken by these cameras did not require additional processing at Mission Control prior to distribution to the media. The intensified television camera was essentially a black and white version of the color television camera, except that it was optimized for a low-light environment. The Videospection camera was also a black and white camera, and was only used on a flight-specific basis. It was a fixed focus, fixed field-of-view camera, with no controls to adjust the video it produced.[862] The OBSS was integrated into the television system beginning with STS-144. The OBSS consisted of Sensor Package 1, which contained an intensified television camera and the laser dynamic range imager, and Sensor Pack 2, which included a laser camera system and the ISIS digital camera. Sensor Package 1 was integrated into the CCTV system; Sensor Package 2 was connected to a different part of the vehicle, and controlled by an onboard laptop.

Crew Systems

Crew systems referred to pieces of equipment, provisions, or other systems that focused specifically on crew efficiency and comfort, and were not considered part of another orbiter

---

[859] USA, *Crew Operations*, 2.3-6. It should be noted that the controls for the video switching unit on panel A7U allowed for only ten inputs and four outputs.
[860] USA, *Crew Operations*, 2.3-9. The video processing unit first flew on STS-92 (*Discovery*) in October 2000.
[861] USA, *Crew Operations*, 2.3-9, 2.3-10. Sequential still video was occasionally used as a way to send a second video image to Mission Control while a video signal (either live or playback) was downloaded via the Ku-band system. This operation was commonly performed during the OBSS inspection of the RCC panels on the wings and nose cap for ground technicians to compare to photographs taken of these areas prior to vehicle stacking, in an effort to locate any damage that occurred during launch and ascent.
[862] USA, *Crew Operations*, 2.3-2, 2.3-3, 2.3-4.

system.[863] Crew systems included clothing and other worn equipment, sleeping provisions, exercise equipment, housekeeping equipment, restraints and mobility aids, stowage provisions, reaching aids, photography equipment, sighting aids, and the Shuttle Orbiter Medical System.

Prior to the mission, each crewmember selected clothing and other equipment, such as pencils, scissors, and calculators, from a list of required and optional flight equipment. Each crewmember was also provided with standard personal hygiene and grooming items. For each mission, the crew was provided with a piece of exercise equipment, which helped to prevent cardiovascular deconditioning and minimized bone and/or muscle loss. Historically, the piece of equipment was either a treadmill, a rowing machine, or a cycle ergometer; by 2004, the cycle ergometer became the primary option. The cycle attached to the middeck floor studs during launch and reentry, and then reconfigured to attach to the standard seat floor studs while on orbit.[864]

Sleeping provisions were provided for each crewmember, based upon the planned operations for a mission (see Figure Nos. B-82, B-86). If all crewmembers were scheduled to sleep simultaneously, sleeping bags and liners, or rigid sleep stations, were provided. The sleeping bags were typically installed on the starboard middeck wall during launch and landing; they could be relocated throughout the crew compartment based on the crew's preference. If the crew was scheduled to sleep in shifts, the four-tier rigid sleep station was typically installed on the starboard middeck wall for the duration of the flight. All sleeping provisions were fitted with adjustable straps to restrain the crewmember's upper and lower body while sleeping.[865]

Housekeeping equipment, which included materials and equipment for cleaning operations, was considered another crew system. Equipment provided for these tasks included biocidal cleanser, disposable gloves, general-purpose wipes, and a vacuum cleaner. The vacuum was typically stored in a middeck locker or the middeck accommodations rack; the remaining items were typically stored in the waste management compartment.[866] Flexible containers were also provided, and included stowage bags, seat containers, trash containers, and retention nets. This type of stowage was available throughout the crew compartment.[867]

To assist the crew in the zero-gravity environment of space, various restraints and mobility aids were provided throughout the orbiter. Such aids consisted of foot loop restraints, seat restraints, retention nets, Velcro, tape, snaps, cable restraints, clips, bungees, and tethers. Foot loop and seat restraints, and retention nets were typically installed by ground technicians prior to the flight; the remaining aids were stowed in lockers for as needed access during a mission. Reaching and visibility aids were also available to assist the crew in monitoring and manipulating displays and controls over the different phases of flight. Such items consisted of the adjustable mirrors in the

[863] USA, *Crew Operations*, 2.5-1.
[864] USA, *Crew Operations*, 2.5-1, 2.5-4.
[865] USA, *Crew Operations*, 2.5-1, 2.5-2.
[866] USA, *Crew Operations*, 2.5-4, 2.5-5.
[867] USA, *Crew Operations*, 2.24-4 through 2.24-6.

commander and pilot stations, the commander/pilot seat adjustments, and an auxiliary reach mechanism fitted with an end effector that could be used to operate different controls.[868]

Photography equipment was also considered a crew system. Typically, two still cameras were provided for a mission, with additional cameras flown when necessary. These could be digital single lens reflex cameras, an aerial photography camera, a Hasselblad 70mm camera system, or in some cases, a 70mm motion picture camera. Sighting aids, such as binoculars, adjustable mirrors, and spotlights, were provided to help the crew see within and outside the crew compartment. Window shades were also provided for every orbiter window to minimize sun glare in the crew cabin (e.g., during crew sleep periods); they were stowed until required. Interdeck light shades to minimized light transfer between the flight deck and middeck during in-cabin photography.[869]

The Shuttle Orbiter Medical System, which consisted of a medication and bandage kit, an emergency medical kit, and an instrument pack, with items such as a respirator, and intravenous fluid system, and electrocardiograph machine, and a defibrillator, was provided for each flight. This equipment was typically stowed in a middeck modular locker. Along with this health equipment was the Operational Bioinstrumentation System, which was used to provide an amplified electrocardiograph analog signal from any crewmember to the ground. It was typically only used during an EVA or in the event of an emergency situation, at the request of the flight surgeon.[870]

Lighting System

Discovery's lighting system provided both interior and exterior lighting for the vehicle. Interior lighting consisted of floodlights, panel lights, instrument lights, numeric lights, and annunciator lights.[871] The floodlights provided general illumination throughout the crew compartment, allowing the crew to function within the flight deck, the middeck, the airlock, and the tunnel adapter. On the flight deck, dual fluorescent light fixtures were installed below the glareshield, above the mission station, and above the payload station. Single fluorescent light fixtures were located above the commander's and pilot's side consoles, as well as in the ceiling above the aft flight deck. There were two seat/center console floodlights, one for the commander and one for the pilot; each was situated in the ceiling above one of the stations and fitted with two incandescent bulbs. The ceiling of the middeck contained eight floodlights, each of which was fitted with a fluorescent lamp behind a translucent polycarbonate material. A single lamp fluorescent fixture also illuminated the waste management compartment and the middeck sleep

[868] USA, *Crew Operations*, 2.5-5, 2.5-6.
[869] USA, *Crew Operations*, 2.5-8 through 2.5-10.
[870] USA, *Crew Operations*, 2.5-10 through 2.5-13.
[871] Panel lights, instrument lights, numeric lights, and annunciator lights are discussed in the physical description, and caution and warning system discussions, as appropriate.

station bunks. Fluorescent floodlights were located in the airlock and the tunnel adapter, as required.[872]

Exterior lighting provided illumination for payload bay door operations, EVAs, remote manipulator system operations, stationkeeping, and docking. Floodlights fitted with metal halide lamps were used to light the payload bay. The power supplies for these fixtures were mounted to electronics assemblies that were cooled by the vehicle's Freon loops. The orbiter's docking lights contained incandescent lamps; they were mounted to cold plates cooled by the water loops.[873]

Payload Deployment and Retrieval System

The payload deployment and retrieval system provided the crew with the means to remotely hold and control the movements of a specified object, typically a payload, and to remotely observe or monitor objects or activities. The operation of the remote manipulator system required two crewmembers, one of whom was stationed at the port side of the aft flight deck. This crewmember used a translational hand controller and a rotational hand controller to operate the arm. The translational controller provided commands to move the arm along the x-, y-, or z-axis, while the rotational controller provided pitch, yaw, and roll control of the arm. The second crewmember was stationed at the starboard side of the aft flight deck to control data processing system inputs, the payload retention latch assemblies, and the system's cameras.[874]

The remote manipulator system was capable of performing a wide range of operations while the vehicle was on orbit.[875] Such tasks included maneuvering a payload within the payload bay, releasing a payload, capturing a free-flying payload, installing an ISS element, and serving as a platform for an EVA. To perform any operations, a standard sequence of tasks was required. First, the shoulder brace was released and the manipulator positioning mechanism was deployed. Afterwards, the manipulator retention latches were released and the Canadarm was lifted out of its cradle position. These activities were performed in reverse following the use of the system.[876]

The payload deployment and retrieval system included the remote manipulator system, the manipulator positioning mechanisms, the manipulator retention latches, the manipulator controller interface unit, and dedicated displays and controls.[877] The remote manipulator system, or Canadarm-1, was the mechanical arm portion of the payload deployment and retrieval system (Figure Nos. B-145, B-146). It was mounted to the port side longeron of the payload bay, if required for the mission.[878] The arm had a total length of 50'-3", and a diameter of 15", and

---

[872] USA, *Crew Operations*, 2.15-1 through 2.15-6.
[873] USA, *Crew Operations*, 2.15-14.
[874] USA, *Crew Operations*, 2.21-2, 2.21-3.
[875] The system was incapable of operating outside of a zero-gravity environment because the arm was too heavy for the motors to move under the influence of gravity. USA, *Crew Operations*, 2.21-2.
[876] USA, *Crew Operations*, 2.21-18 through 2.21-20.
[877] USA, *Crew Operations*, 2.21-1.
[878] Fittings were provided on the starboard side longeron for a second remote manipulator system, but it was never

could handle up to 586,000 pounds. It was fitted with six joints, which were connected via structural members, or "booms," and a payload capture/release device, or end effector. These joints gave the arm an extensive range of motion, allowing it to reach across the payload bay, over the crew compartment, or to areas underneath the orbiter. The arm could only be deployed when the payload bay doors were open, could only operate in zero gravity, and could be jettisoned through pyrotechnic charges, in the case of a major malfunction. It could perform several tasks, including deploying and retrieving a payload, providing a stable platform for EVA crewmember foot restraints or workstations, mating space station components, and taking payload bay surveys; the controls for the arm were located on the aft flight deck.[879]

The payload deployment and retrieval system contained four manipulator positioning mechanisms. One mechanism was at the shoulder of the arm (X_o = 679.5) and served to attach the arm to the orbiter; it contained one of the four pyrotechnic separation charges for the jettison system. The other three mechanisms were located at X_o = 911.05, 1189, and 1256.5, and served as cradling units for the arm. Each contained a manipulator retention latch to secure the arm during launch, entry, and periods of inactivity, as well as a pyrotechnic separation charge. All four mechanisms were mounted to a torque tube, which drove the rotary actuators that moved the arm between its stowage and operational positions. The jettison system was provided in the event that the arm could not be recradled and restowed; each of the four separation points was individually actuated.[880]

The manipulator controller interface unit handled and evaluated the exchange of information between itself and the systems management general purpose computer, the displays and controls, and the remote manipulator system. It served to manipulate data, analyze and respond to failure conditions, and control the end effector auto capture/release and rigidization/derigidization sequence logic. A spare interface unit was typically flown on a mission in case the installed unit failed.[881]

Additional features of the payload deployment and retrieval system included an active thermal control system, a passive thermal control system, and a closed circuit television system. The active thermal system consisted of redundant heater systems, each of which was comprised of twenty-six heaters, concentrated at the arm's joint and end effector. The passive system consisted of multilayer insulation blankets and thermal coatings that reflected solar energy away from the arm. The blankets were attached to the arm, and each other, with Velcro. Exposed areas around the moving parts were painted with a special white paint that provided the same service.[882] The closed circuit television system aided the crew in monitoring payload deployment and retrieval

---

installed. Instead, the infrastructure was used for the orbiter boom sensor system, which was installed to photograph the thermal protection system on the orbiter's underside in response to the *Columbia* accident. USA, *Crew Operations*, 2.10-1, 2.21-1.

[879] USA, *Crew Operations*, 2.21-1, 2.21-2.

[880] USA, *Crew Operations*, 2.21-11, 2.21-12.

[881] USA, *Crew Operations*, 2.21-3.

[882] USA, *Crew Operations*, 2.21-8.

system operations. The system consisted of a zoomable, fixed camera and a spotlight mounted to the arm's end effector, and a pan and tilt camera that sat just below the elbow joint. There were also four cameras within the payload bay that could be panned, tilted, and zoomed as required. Keel cameras were sometimes mounted to the bottom of the payload bay depending on the mission.[883]

Payload and General Support Computer

Typically, each Space Shuttle mission flew with one or more payload and general support computers. These computers were off-the-shelf laptop computers that were used either as a standalone computer or as a terminal device for communicating with other electronic systems. Crewmembers on the middeck or flight deck used the laptops to interface with flight-specific experiments that were situated within the crew cabin or the payload bay. In addition, the computers were used to monitor experiment data, and/or issue commands to payloads or experiments within the payload bay. Each computer was provided with standard support equipment, including interface cables, data cables, an expansion tray to provide additional cable ports, an orbiter communications adapter card to interface with the orbiter's communications systems, and a television tuner to interface the computer to the orbiter's CCTV signals.[884]

Waste Management System

The waste management system was an integrated, multifunctional system that was used primarily to collect crew biological wastes in a zero gravity environment. The system collected, dried, and stored fecal waste. In addition, it collected urine and condensate from the crew cabin and EMU, and transferred both to the wastewater tank. The system also provided an interface for venting trash container gases overboard, and dumping atmospheric revitalization wastewater in a contingency situation.[885]

The waste management system (Figure B-147) was situated on the middeck level of the crew cabin, immediately aft of the crew hatch. It contained a commode, a urinal, fan separators, an odor/bacteria filter, a vacuum vent disconnect, and controls. The commode measured 27" x 27" x 29", and was used like a standard toilet. It contained a multilayer hydrophobic porous bag liner for collecting and storing solid waste. The urinal consisted of a flexible hose with attachable funnels to accommodate both men and women. Fan separators were used to separate the waste liquid from the airflow; the liquid waste was transported to the wastewater tank, while the air was returned to the cabin after passing through the odor/bacteria filter. The vacuum vent quick disconnect was used to vent gases directly overboard.[886]

---

[883] USA, *Crew Operations*, 2.21-9.
[884] USA, *Crew Operations*, 2.20-1, 2.20-2.
[885] USA, *Crew Operations*, 2.25-1.
[886] USA, *Crew Operations*, 2.25-1, 2.25-2.

The waste management system was fitted with a compartment door and two privacy curtains. One of the curtains was attached to the top of the compartment door, and was used to cover the interdeck access opening; the other curtain was connected to the outer edge of the door and interfaced with the middeck accommodations rack, if installed. In addition, various restraints and adjustment mechanisms were provided to aid the crew in achieving the proper body positioning. These included a toe bar, a footrest, body restraints, and handholds. Rubber grommets were provided in the compartment to allow crewmembers to restrain their towels and washcloths.[887]

Extravehicular Activity Systems

An EVA, also commonly referred to as a spacewalk, occurred when a crewmember left the protective environment of the orbiter's pressurized cabin and ventured out into the vacuum of space wearing a space suit. EVAs were used for satellite repair and retrieval, as well as for the assembly of the ISS. All EVAs required the use of a self-contained pressurized space suit, known as the EMU, which provided life support functions for the crewmember. The unit was also supplied with a rechargeable battery, duplex UHF communications, biological and instrument telemetry, and caution/warning electronics. It was designed for a total maximum duration of seven hours, which consisted of fifteen minutes for egress, six hours for EVA tasks, fifteen minutes for ingress, and a thirty-minute reserve. Two EMUs were provided for each baseline mission.[888]

The EMU (Figure B-148) was the anthropomorphic pressure vessel that enclosed the crewmember's torso, limbs, and head; it was primarily composed of the space suit assembly, a life support system, and numerous associated support and ancillary equipment. The space suit consisted of the hard upper torso, with soft material arms, the lower torso assembly, extravehicular gloves, a helmet/extravehicular visor assembly, a liquid cooling and ventilation garment, an operational bioinstrumentation system, a communications carrier assembly, a disposable in-suit drink bag, and a maximum absorption garment (similar to a diaper).[889]

The hard upper torso provided pressure containment for the upper body, except the head, and served as the central component from which the mechanical, electrical, and fluid interfaces of the EMU extended. It was available in four sizes to accommodate different-sized crewmembers, and included a fiberglass shell, assorted mounting brackets, a waterline and vent tube assembly, an electrical harness, shoulder bearing assemblies, and a waist disconnect ring. Attached to the shoulder bearing assemblies were the right and left arm assemblies. Each of the assemblies had an upper arm assembly, a rotating bearing at the armhole, a lower arm assembly, a rotating arm bearing, and a wrist disconnect ring. The sizing of the arm could be changed on the ground or on-orbit, with the use of different segments and sizing rings. The lower torso assembly encompassed the waist, the lower torso, the legs, and the feet. It included a waist assembly with a

[887] USA, *Crew Operations*, 2.25-2, 2.25-3.
[888] USA, *Crew Operations*, 2.11-1.
[889] USA, *Crew Operations*, 2.11-3.

rotating waist bearing, a waist disconnect ring, a trouser assembly, and boot assemblies. As with the arm assemblies, the sizing of the leg assemblies could be changed on ground or on-orbit through the use of different leg segments and sizing rings.[890]

The extravehicular gloves were detachable and were customized to fit the individual crewmembers. Each glove included a wrist disconnect ring with a rotating wrist bearing, two wrist gimbal rings, an adjustable palm restraint bar/strap, a wrist tether strap, and fingertip heaters. The helmet was a "one-size-fits-all" component that consisted of a detachable, transparent, hard pressure vessel encompassing the head. It included a helmet disconnect ring, a helmet purge valve, and a vent pad. It could also be fitted with a Fresnel lens, for improved visibility, or a valsalva device, for clearing ears during pressure changes. The extravehicular visor assembly attached to the helmet and provided the crewmember with visual, thermal, impact, and micrometeoroid protection. The visor assembly included a clear protective visor, a sun visor, center and side eyeshades, and a fiberglass shell.[891]

The liquid cooling and ventilation garment was a form-fitting, elastic garment worn against the body. It included outer restraint fabric, an inner liner assembly, crew optional comfort pads, a biomed pocket, a water tubing network, a ventilation ducting network, a multiple water connector, and a full torso zipper. The water tubing network circulated water over the crewmember's body to provide cooling. The ventilation ducting network drew gas from the suit's extremities and routed it back to the primary life support system. Connections to the hard upper torso were provided through the multiple water connector.[892]

The communications carrier assembly was a cloth, aviator-type cap that positioned and supported the electronics for interfacing with the EMU radio. It contained the microphones and earphones required for the crewmembers performing the EVA to communicate with each other, as well as the orbiter. It also allowed the crewmembers to communicate with Mission Control through the orbiter's communications system. The disposable in-suit drink bag was a single use, heat sealed, flexible bladder assembly that held thirty-two ounces of water. It was mounted to the front interior of the hard upper torso and had a drinking tube that extended to the neck area. The maximum absorption garment was comprised of multiple layers of material, designed to rapidly absorb and store urine. It was disposable after use and had the capacity to hold thirty-two ounces of liquid.[893]

Another EVA system was the life support system, which provided a safe living environment for the crewmember while inside the EMU. It included provisions for breathing oxygen, suit pressurization, crewmember cooling, crewmember communications, displays and controls for EMU operation, and monitors for the EMU consumables and operational integrity. The life

---

[890] USA, *Crew Operations*, 2.11-3.
[891] USA, *Crew Operations*, 2.11-4.
[892] USA, *Crew Operations*, 2.11-4.
[893] USA, *Crew Operations*, 2.11-5.

support system consisted of a primary oxygen system, a secondary oxygen pack, an oxygen ventilation circuit, a liquid transfer cooling system, a feedwater circuit, electrical interfaces, an extravehicular communicator, a display and control module, and a caution and warning system.[894]

The primary life support subsystem consisted of the primary oxygen system, the oxygen ventilation circuit, the liquid transfer cooling system, the feedwater circuit, electrical interfaces, the extravehicular communicator, and the caution and warning system. The secondary oxygen pack was a separate unit that was attached to the bottom of the primary life support subsystem; together, these two components made up the backpack portion of the EMU. The purpose of the primary oxygen system was to provide the crewmember with breathing oxygen and satisfy pressure requirements for the EVA. The system was charged through a servicing and cooling umbilical to the orbiter's ECLSS. Its functions included suit pressurization, provision of breathing oxygen, and water pressurization. The secondary oxygen system served as the backup to the primary oxygen system. It provided a minimum of thirty minutes of emergency oxygen.[895]

The oxygen ventilation circuit formed a closed loop with the EMU, providing oxygen for breathing, suit pressurization for intravehicular activity and EVA operations, and ventilation for cooling and elimination of exhaled gases. Similar to the orbiter's crew compartment, a lithium hydroxide cartridge, installed within the primary life support subsystem, absorbed carbon dioxide. The liquid transport cooling system used a centrifugal pump to circulate water through the liquid cooling and ventilation garment to cool the crewmember. Its components consisted of the pump, a temperature control valve, a pump check valve, a temperature sensor, and a service and cooling umbilical bypass valve.[896] The feedwater circuit dissipated heat loads by removing moisture from the ventilation circuit and gas from the transport circuit. It consisted of two primary tanks and one reserve feedwater tank, and various pressure sensors, valves, and regulators. The tanks were filled or recharged through the potable water tanks from the orbiter's ECLSS. The EMU's electrical system was composed of a battery, a feedwater shutoff valve, a coolant isolation valve, a motor, instrumentation, an extravehicular communicator, a display and control module, and a caution and warning system. The battery provided the power for the entire system, and consisted of eleven sealed, silver-zinc, high current density cells connected in series.[897]

The extravehicular communicator was comprised of both orbiter-based and EMU-based equipment, including EVA/air traffic control transceivers and antennas (orbiter-based) and an EMU radio and antenna (EMU-based). The system provided voice communications among the EVA crewmembers, between the EVA crewmembers and the orbiter, and between the EVA crewmembers and the ground. The display and control module contained all of the controls and

---

[894] USA, *Crew Operations*, 2.11-5.
[895] USA, *Crew Operations*, 2.11-5, 2.11-6.
[896] USA, *Crew Operations*, 2.11-6.
[897] USA, *Crew Operations*, 2.11-7.

displays necessary for nominal operation and monitoring of the EMU systems. It was installed on the hard upper torso; its surfaces were faced with a thermal micrometeoroid garment, which contained the labels for the controls. The caution and warning system consisted of instrumentation and a microprocessor, which were used to obtain, process, and visually display information for use by the EVA crewmember in the operation and management of the EMU. Its functions involved display EMU leak check procedures, monitoring and display EMU consumables status, monitoring EMU operational integrity, and alerting crewmembers to EMU anomalies.[898]

IID. Mission Highlights and Discovery "Firsts"

OV-103, known as the "workhorse" of the SSP, flew thirty-nine missions between 1984 and 2011. In her twenty-seven years of service, *Discovery* was distinguished by a number of **"firsts**" and other significant accomplishments; twenty-seven missions included a new and/or noteworthy accomplishment. She was the first to complete twenty missions, marked by STS-63 (February 1995), and the only orbiter selected for NASA's RTF missions, STS-26 (September-October 1988) and STS-114 (July-August 2005), in the wake of the *Challenger* and *Columbia* accidents, respectively. Because of this, she is the only extant orbiter to have flown a designated test flight (STS-26, STS-114, STS-121). She is also the only extant orbiter to have flown successive missions multiple times (STS-51A, STS-51C, and STS-51D [1984-85]; STS-31 and STS-41 [1990]; STS-91 and STS-95 [1998]; and STS-114 and STS-121 [2005-06]).[899] Following the announced close of the SSP, *Discovery* was the first shuttle orbiter to complete transition and retirement processing.

In their "Major Milestones" chapter in *Wings in Orbit*, JSC Historian Jennifer Ross-Nazzal and co-author Dennis Webb, classify all shuttle missions into six major categories, noting that "categories are approximate as many missions feature objectives or payloads that can fit in multiple categories."[900] In accordance with this classification, *Discovery's* thirty-nine missions fall within the following groups, with the number of related missions noted:

- Classified DoD: four (4)
- Satellite deployment, retrieval, or repair: nine (9)
- Deployment or repair of interplanetary probes or observatories: five (5)
- Focus on science: six (6)
- Shuttle/*Mir* support: two (2)
- International Space Station support: thirteen (13)

---

[898] USA, *Crew Operations*, 2.11-7, 2.11-8.
[899] *Atlantis* is the only other extant orbiter to have flown successive missions (STS-101 and STS-106 [2000]). Chris Gebhardt, "After 26 Years;" Hale, *Wings In Orbit*, 527-29.
[900] Ross-Nazzal and Webb, "Major Milestones," 18.

These missions reflect the history of the SSP and its evolving priorities. During her first decade of service, *Discovery* released commercial satellites and DoD payloads into orbit. Missions throughout the 1990s focused on scientific advancements, including the deployment and servicing of the HST. Also during this decade, *Discovery* completed a pair of support missions to *Mir* as a prelude to the development of the ISS. Beginning in 1999, and continuing through her final flight in 2011, the missions of *Discovery* focused on the delivery of parts for ISS assembly, and the transport of crews and supplies. A list of Discovery's flights, with associated primary mission category, follows.

Space Shuttle *Discovery* Launch, Landing, and Mission Summary

SSP Flight No.	Mission No.	Orbiter/ Flight No.	Launch Date	Landing Date	Landing Site	Primary Mission Category
12	STS-41D	*Discovery* - 1	August 30, 1984	September 5, 1984	EAFB	Satellite
14	STS-51-A	*Discovery* - 2	November 8, 1984	November 16, 1984	KSC	Satellite
15	STS-51-C	*Discovery* - 3	January 24, 1985	January 27, 1985	KSC	DoD
16	STS-51-D	*Discovery* - 4	April 12, 1985	April 19, 1985	KSC	Satellite
18	STS-51-G	*Discovery* - 5	June 17, 1985	June 24, 1985	EAFB	Satellite
20	STS-51-I	*Discovery* - 6	August 27, 1985	September 3, 1985	EAFB	Satellite
26	STS-26	*Discovery* - 7	September 29, 1988	October 3, 1988	EAFB	Satellite
28	STS-29	*Discovery* - 8	March 13, 1989	March 18, 1989	EAFB	Satellite
32	STS-33	*Discovery* - 9	November 22, 1989	November 27, 1989	EAFB	DoD
35	STS-31	*Discovery* - 10	April 24, 1990	April 29, 1990	EAFB	Interplanetary probe or observatory
36	STS-41	*Discovery* - 11	October 6, 1990	October 10, 1990	EAFB	Interplanetary probe or observatory
40	STS-39	*Discovery* - 12	April 28, 1991	May 6, 1991	KSC	DoD
43	STS-48	*Discovery* - 13	September 12, 1991	September 18, 1991	EAFB	Interplanetary probe or observatory
45	STS-42	*Discovery* - 14	January 22, 1992	January 30, 1992	EAFB	Science
52	STS-53	*Discovery* - 15	December 2, 1992	December 9, 1992	EAFB	DoD
54	STS-56	*Discovery* - 16	April 8, 1993	April 17, 1993	KSC	Science
57	STS-51	*Discovery* - 17	September 12, 1993	September 22, 1993	KSC	DoD
60	STS-60	*Discovery* - 18	February 3, 1994	February 11, 1994	KSC	Science
64	STS-64	*Discovery* - 19	September 9, 1994	September 20, 1994	EAFB	Science

SSP Flight No.	Mission No.	Orbiter/ Flight No.	Launch Date	Landing Date	Landing Site	Primary Mission Category
67	STS-63	*Discovery* - 20	February 3, 1995	February 11, 1995	KSC	*Mir* support
70	STS-70	*Discovery* - 21	July 13, 1995	July 22, 1995	KSC	Satellite
82	STS-82	*Discovery* - 22	February 11, 1997	February 21, 1997	KSC	Interplanetary probe or observatory
86	STS-85	*Discovery* - 23	August 7, 1997	August 19, 1997	KSC	Science
91	STS-91	*Discovery* - 24	June 2, 1998	June 12, 1998	KSC	*Mir* support
92	STS-95	*Discovery* - 25	October 29, 1998	November 7, 1998	KSC	Science
94	STS-96	*Discovery* - 26	May 27, 1999	June 6, 1999	KSC	ISS support
96	STS-103	*Discovery* - 27	December 19, 1999	December 27, 1999	KSC	Interplanetary probe or observatory
100	STS-92	*Discovery* - 28	October 11, 2000	October 24, 2000	EAFB	ISS support
103	STS-102	*Discovery* - 29	March 8, 2001	March 21, 2001	KSC	ISS support
106	STS-105	*Discovery* - 30	August 10, 2001	August 22, 2001	KSC	ISS support
114	STS-114	*Discovery* - 31	July 26, 2005	August 9, 2005	EAFB	ISS support
115	STS-121	*Discovery* - 32	July 4, 2006	July 17, 2006	KSC	ISS support
117	STS-116	*Discovery* - 33	December 9, 2006	December 22, 2006	KSC	ISS support
120	STS-120	*Discovery* - 34	October 23, 2007	November 7, 2007	KSC	ISS support
123	STS-124	*Discovery* - 35	May 31, 2008	June 14, 2008	KSC	ISS support
125	STS-119	*Discovery* - 36	March 15, 2009	March 28, 2009	KSC	ISS support
128	STS-128	*Discovery* - 37	August 28, 2009	September 11, 2009	EAFB	ISS support
131	STS-131	*Discovery* - 38	April 5, 2010	April 20, 2010	KSC	ISS support
133	STS-133	*Discovery* -39	February 24, 2011	March 9, 2011	KSC	ISS support

Classified Department of Defense Missions

Between 1985 and 1992, *Discovery* flew four of the total ten classified DoD shuttle missions. These four missions were STS-51C, STS-33, STS-39, and STS-53. The missions broke from NASA's usually unclassified approach as launch times and payloads were kept secret, no astronaut interviews were allowed, and the media was not privy to air-to-ground communications.

Discovery's third flight, STS-51C, was the first SSP mission dedicated to the DoD. Because of the classified payload, little is known about the three-day mission in January 1985.[901] The USAF used the Inertial Upper Stage booster to deploy the payload, reportedly an eavesdropping satellite, ORION-1.[902] STS-31, *Discovery's* ninth flight, launched on November 22, 1989, was the fifth mission dedicated to the DoD. While unconfirmed, ORION-2, another eavesdropping satellite, may have been deployed.[903] STS-39, launched on April 28, 1991, was the first unclassified DoD mission, and the first time that flight details were released to the public. It included experiments sponsored by the USAF and the Strategic Defense Initiative.[904] The unclassified payload included Air Force Program-675 (AFP-675); Infrared Background Signature Survey (IBSS) with Critical Ionization Velocity (CIV), Chemical Release Observation (CRO) and Shuttle Pallet Satellite-II (SPAS-II) experiments; and Space Test Payload-1 (STP-1). Classified payload consisted of the Multi-Purpose Release Canister. Also on board was Radiation Monitorin Equipment III (RME III) and Cloud Logic to Optimize Use of Defense Systems-1A (CLOUDS-I).[905]

STS-53, *Discovery's* fifteenth flight and the final dedicated DoD mission of the SSP, launched on December 2, 1992. The partially classified payload included SDS B-3, assumed to be a data relay satellite.[906] *Discovery* also carried two unclassified secondary payloads and nine unclassified middeck experiments.[907]

Satellite Deployment, Retrieval, and Repair

Nine of *Discovery's missions*, launched between 1984 and 1995, were devoted to communication satellite deployment and repairs, including RTF-1 after the *Challenger* accident. These missions included STS-41D, -51A, -51D, -51G, -51I, -26, -29, -51, and -70. Communication satellites were *Discovery*'s main mission objective during her first two years of service. However, after the *Challenger* accident in 1986, "satellite retrieval and repair missions all but disappeared from the shuttle manifest."[908]

Three satellites were deployed on *Discovery's* maiden flight, STS-41D, launched on August 30, 1984. These included Satellite Business System SBS-D, SYNCOM IV-2 (also known as LEASAT2), and TELSTAR. The mission was nearly flawless, and the three satellites were

---

[901] NASA KSC, "STS-51C," November 23, 2007, http://www.nasa.gov/mission_pages/shuttle/shuttlemissions/archives/sts-51C.html; Boeing, *OV-103, Volume II*, 96.
[902] Cassutt, "Secret Space Shuttle," 3.
[903] Cassutt, "Secret Space Shuttle," 3.
[904] Rumerman, *U.S. Human Spaceflight*, 49.
[905] NASA KSC, "STS-39 (40)," June 29, 2001, http://science.ksc.nasa.gov/shuttle/missions/sts-39/mission-sts-39.html; Boeing, *OV-103, Volume II*, 100.
[906] Cassutt, "Secret Space Shuttle," 3.
[907] NASA KSC, "STS-53 (52)," June 29, 2001, http://science.ksc.nasa.gov/shuttle/missions/sts-53/mission-sts-53.html; Boeing, *OV-103, Volume II*, 102.
[908] Ross-Nazall and Webb, "Major Milestones," *25*.

successfully deployed. Also carried in the payload bay was an experimental 102' x 13' solar array, named the Office of Application and Space Technology, or OAST-1.[909] The knowledge gained from testing the device led to the arrays that later powered the ISS.[910] STS-41D also was the first flight to carry a commercially sponsored payload specialist.[911]

STS-51A was marked by the deployment of two satellites, Canadian communications satellite TELESAT-H (ANIK) and Defense communications satellite SYNCOM IV-I (also known as LEASAT-1).[912] In addition, two communications satellites, Palapa B-2 and Westar VI, were retrieved as separate EVAs. These satellites had been deployed nine months earlier, but failed to achieve their desired orbits. Astronauts Joseph Allen and Dale Gardner captured and secured both satellites in *Discovery's* payload bay.[913] This marked the first occasion satellites were retrieved from orbit and returned to Earth.[914]

Discovery deployed two communications satellites on her fourth flight, STS-51D, which launched on April 12, 1985, almost one month after the originally scheduled date. TELESAT-1 (ANIK C-1) was released satisfactorily, but SYNCOM IV-3 (also known as LEASAT-3) failed to activate. Two mission specialists were sent on an unplanned EVA in an unsuccessful effort to repair it.[915] The mission included two firsts: US Senator Jake Garn became the first member of Congress to fly aboard a shuttle, and astronauts participated in Toys in Space, an experiment targeted at schoolchildren.[916] The nearly seven-day flight concluded April 19 when *Discovery*'s front right tire blew while landing at KSC. The blown tire and extensive brake damage prompted the landing of future flights at Edwards AFB until implementation of the nose wheel steering system.

STS-51G, *Discovery*'s fifth flight, which launched on June 17, 1985, carried three communication satellites: MORELOS-A, for Mexico; ARABSAT-A, for Arab Satellite Communications Organization; and TELSTAR-3D, for AT&T. The crew included Prince Sultan

---

[909] NASA KSC, "41-D (12)," June 29, 2001, http://science.ksc.nasa.gov/shuttle/missions/41-d/mission-41-d.html; NASA KSC, "STS-41D," February 18, 2010, http://www.nasa.gov/mission_pages/shuttle/shuttlemissions/archives/sts-41D.html.

[910] The rest of the cargo included: a large format camera; an IMAX camera to shoot footage later used in the film *The Dream Is Alive*; a Continuous Flow Electrophoresis System III, built by a pharmaceutical company; Radiation Monitoring Equipment; Shuttle Student Involvement Program experiments devised by high school students; and Cloud Logic to Optimize Use of Defense Systems, an Air Force experiment. NASA KSC, "STS-41D," February 18, 2010, http://www.nasa.gov/mission_pages/shuttle/shuttlemissions/archives/sts-41D.html.

[911] In 1983, NASA confirmed Charles D. Walker as the first industrial payload specialist. He was the first non-astronaut to fly on a shuttle. As a crew member, he accompanied the continuous flow electrophoresis equipment, developed for the McDonnell Douglas Corporation, on STS-41D, STS-51D, and STS-61B. NASA JSC, "Biographical Data, Charles D. Walker, February 1999, http://www.jsc.nasa.gov/Bios/PS/Walker.html.

[912] NASA KSC, "51-A (14)," June 29, 2001, http://science.ksc.nasa.gov/shuttle/missions/51-a/mission-51-a.html.

[913] Ross-Nazall and Webb, "Major Milestones," 23.

[914] NASA, *United States Space Shuttle Firsts*, 8.

[915] NASA KSC, "STS-51D," February 18, 2010, http://www.nasa.gov/mission_pages/shuttle/shuttlemissions/archives/sts-51D.html.

[916] NASA, *Space Shuttle Firsts*, 9.

Salman Al Saud of Saudi Arabia as a payload specialist, the first Arab and member of a royal family to travel to space.[917] During this mission, the Shuttle Pointed Autonomous Research Tool for Astronomy (SPARTAN) was released for the first time to survey the Milky Way galaxy.[918]

STS-51I, launched on August 27, was *Discovery's* third mission in 1985 that deployed communications satellites. Three satellites were deployed: ASC-1, for American Satellite Company; AUSSAT-1, an Australian Communications Satellite; and SYNCOM IV-4 also known as LEASAT-4), the Synchronous Communications Satellite. SYNCOM IV-4 failed to function after reaching geosynchronous orbit. Additionally, Mission Specialists William F. Fisher and James D.A. van Hoften retrieved, repaired, and redeployed LEASAT-3, originally deployed on mission STS-51-D.[919]

The primary payload carried aboard both missions STS-26 and STS-29, launched in September 1988, and March 1989, respectively, were NASA's Tracking and Data Relay Satellites, TDRS-C and TDRS-D. Each satellite was attached to an Inertial Upper Stage, which propelled them to a geosynchronous orbit.[920] STS-26 also was the first flight to use the redesigned SRBs, and the first to feature an all-veteran astronaut crew since the flight of Apollo 11.[921]

Discovery's seventeenth flight, STS-51, launched on September 12, 1993, after numerous delays, deployed the Advanced Communications Technology Satellite, or ACTS. This satellite served as a test bed for advanced communications satellite concepts and technology. Its Transfer Orbit Stage booster was used for the first time to propel a communications satellite into geosynchronous altitude on the first day of the mission. The first attempt to deploy ACTS was delayed when two-way communications were temporarily lost with Mission Control.[922] It also marked the first time a Shuttle payload was controlled from KSC.[923] The mission ended with the first nighttime shuttle landing at KSC.

The last *Discovery* mission to deploy a satellite was STS-70, launched on July 13, 1995. The primary objective was to release the seventh TDRS satellite, TDRS-G, and the sixth placed in operational use. The deploy operations used three separate control centers to manage orbit operations. The White Sands ground station controlled the TDRS, the JSC Mission Control Center controlled the shuttle, and the booster stage was controlled from Onizuka AFB in

---

[917] Gebhardt, "After 26 Years;" Rumerman, *U.S. Human Spaceflight*, 44-45.
[918] NASA KSC, "STS-51-G (18)," June 29, 2001, http://science.ksc.nasa.gov/shuttle/missions/51-g/mission-51-g.html.
[919] NASA KSC, "STS-51-I (20)," June 29, 2001, http://science.ksc.nasa.gov/shuttle/missions/51-i/mission-51-i.html.
[920] NASA KSC, "STS-26," February 18, 2010, http://www.nasa.gov/mission_pages/shuttle/shuttlemissions/archives/sts-26.html; NASA KSC, "STS-29," August 30, 2008, http://www.nasa.gov/mission_pages/shuttle/shuttlemissions/archives/sts-29.html.
[921] Rumerman, *U.S. Human Spaceflight*, 46.
[922] NASA KSC, "STS-51 (57)," June 29, 2001, http://science.ksc.nasa.gov/shuttle/missions/sts-51/mission-sts-51.html.
[923] This payload was the Orbiting and Retrievable Far and Extreme Ultraviolet Spectrograph-Shuttle Pallet Satellite, a joint German-US astrophysics payload. Rumerman, *U.S. Human Spaceflight*, 54.

Sunnyvale, California. This mission marked the completion of NASA's TDRS system that provided communication, tracking, telemetry, data acquisition, and command services to the shuttle and other low-orbital spacecraft missions.[924] STS-70 was the first time a Space Shuttle flew with the new Block I SSME, which featured improvements that increased their stability and safety.[925]

Deployment and Repair of Interplanetary Probes and Observatories

Discovery flew five missions between 1990 and 1999 that included the deployment or repair of interplanetary probes and observatories, the most notable of which was the Hubble Space Telescope (HST). The HST is the "first large optical telescope ever to be placed above Earth's atmosphere and the first of NASA's Great Observatories."[926] *Discovery* deployed the telescope in 1990, and returned to the HST for two of the five servicing missions; *Columbia*, *Atlantis*, and *Endeavour* each flew one servicing mission. The vehicle's other two space science missions included the release of the *Ulysses* observatory and the Upper Atmospheric Research Satellite interplanetary probe.

Discovery deployed the HST during STS-31, the vehicle's tenth flight. The mission was first scheduled for April 18, 1990, but that date was moved forward to April 10, marking the first time a shuttle launch was expedited.[927] However, the launch that day was scrubbed when the orbiter's APU failed. Rescheduled for April 24, a malfunctioning LO2 valve briefly held up liftoff before *Discovery* launched.[928] Because of the need to place the HST above most of the atmosphere, the orbiter reached an altitude of 329.22 statute miles, the highest shuttle orbit at that time.[929] The HST was deployed on the second day of the mission, but a faulty sensor delayed the release of one of the solar arrays needed to power the telescope. Carbon brakes were used on an orbiter for the first time when *Discovery* touched down on April 29 at Edwards AFB.[930]

Subsequently, in 1997 and 1999, *Discovery* flew two servicing missions to repair the HST. The first, STS-82, was launched on February 11, 1997. This was the second in a series of planned servicing missions; the first was performed by the *Endeavour* crew on STS-61 (December 1993). Two older instruments, the Goddard High Resolution Spectrometer and the Faint Object Spectrograph, were removed. Two new astronomy instruments were installed: the Space Telescope Imaging Spectrograph (STIS) and the Near Infrared Camera and Multi-Object Spectrometer (NICMOS). In addition, other existing hardware was replaced with upgrades and

---

[924] Rumerman, *U.S. Human Spaceflight*, 58.
[925] NASA KSC, "STS-70 (70)," June 29, 2001, http://www.nasa.gov/shuttle/missions/sts-70/mission-sts-70.html.
[926] Rumerman, *U.S. Human Spaceflight*, 48.
[927] Jenkins, *Space Shuttle*, 297.
[928] NASA KSC, "STS-31 (35)," June 29, 2001, http://science.ksc.nasa.gov/shuttle/missions/sts-31/mission-sts-31.html.
[929] Rumerman, *U.S. Human Spaceflight*, 48.
[930] NASA, *Space Shuttle Firsts*, 13; Rumerman, *U.S. Human Spaceflight*, 48; Carol Christian, Kamlesh Lulla, and David Leckrone, "The Space Shuttle and Great Observatories," in Hale, *Wings In Orbit.*

spares. The HST received a refurbished Fine Guidance Sensor to provide pointing information for the spacecraft; it was also used as a scientific instrument for astrometric science. A reel-to-reel tape recorder was replaced with a Solid State Recorder. One of four Reaction Wheel Assemblies (RWAs) was replaced with a refurbished spare. The RWAs help move the telescope into position and also maintain the position of the spacecraft.[931] The mission included five EVAs, which totaled thirty-three hours and eleven minutes.

STS-103, *Discovery*'s twenty-seventh mission and second servicing mission to the HST, launched on December 19, 1999, after several delays. Four EVAs were scheduled to renew and refurbish the telescope. Since the last servicing mission flown in February 1997, three gyroscopes had failed (in 1997, 1998, and 1999, respectively). During the STS-103 mission, all six gyroscopes were replaced. Also, the Fine Guidance Sensor was replaced with a refurbished unit that was returned from the second servicing mission. The spacecraft's computer was replaced, and a new voltage/temperature kit was installed to prevent battery overcharging and overheating. A new transmitter, solid state recorder, and S-Band Single Access Transmitter (SSAT) also were installed. New thermal insulation blankets were added to replace the degraded outer insulation. [932]

Discovery's eleventh flight, STS-41, launched on October 6, 1990, deployed *Ulysses*, an ESA-built deep space probe, to study the polar regions of the sun. Two upper stages, the Inertial Upper Stage and a mission-specific Payload Assist Module-S, combined for the first time to send *Ulysses* toward out-of-ecliptic trajectory.[933] The following year, STS-48, launched on September 12, 1991, deployed the Upper Atmospheric Research Satellite to study the Earth's stratosphere, mesosphere, and lower thermosphere.[934] The satellite was a component of NASA's Earth Science Enterprise program, an initiative to better understand how humans affect the planet.

Science Research

During the 1990s, Spacelab and SPACEHAB modules carried data-collecting satellites aboard *Discovery*. Beginning with STS-42 in 1992, experiments in areas such as life, Earth, and material sciences were the primary manifest for six *Discovery* missions.[935] These included STS-42, -56, -60, -64, -85, and -95.

STS-42, *Discovery*'s fourteenth flight, began on January, 22, 1992. It carried the International Microgravity Laboratory-1, a pressurized manned Spacelab module. The mission objective was to explore in depth the complex effects of weightlessness on living organisms and materials

---

[931] NASA KSC, "STS-82 (82)," June 29, 2001, http://science.ksc.nasa.gov/shuttle/missions/sts-82/mission-sts-82.html.
[932] NASA KSC, "STS-103 (96)," June 29, 2001, http://science.ksc.nasa.gov/shuttle/missions/sts-103/mission-sts-103.html.
[933] NASA KSC, "STS-41 (36)," June 29, 2001, http://science.ksc.nasa.gov/shuttle/missions/sts-41/mission-
[934] Rumerman, *U.S. Human Spaceflight*, 50.
[935] Ross-Nazzal and Webb, "Major Milestones," 27.

processing. The crew divided into two teams to conduct experiments on the human nervous system's adaptation to low gravity and the effects of microgravity on other life forms. Low-gravity materials processing experiments included crystal growth from a variety of substances. The mission was extended one day to finish additional experiments.[936]

Discovery's sixteenth flight, STS-56, began on April 8, 1993, two days later than planned. The flight's primary payload was the Atmospheric Laboratory for Applications and Science (ATLAS-2), designed to collect data on the relationship between the sun's energy output and the Earth's middle atmosphere, and how these factors affect the ozone layer. ATLAS-2 was one element of NASA's Mission to Planet Earth program. All seven ATLAS-2 instruments were first flown on ATLAS-1 during the STS-45 mission flown by *Atlantis* in March 1992. The STS-56 crew also deployed the SPARTAN-201, a free-flying science instrument platform designed to study velocity and acceleration of solar wind and to observe the sun's corona. In addition, experiments were done on microgravity and tissue loss in space.[937] STS-56 also marked the first contact between a Shuttle and *Mir* using amateur radio equipment.

Discovery's eighteenth mission, STS-60, which launched on February 3, 1994, and returned on February 11, carried a variety of SPACEHAB module experiments. These included the Organic Separations payload, designed to investigate cell separation techniques for possible pharmaceutical and biotechnology processing, and the Equipment for Controlled Liquid Phase Sintering Experiment package, a furnace designed to study stronger, lighter and more durable metals. Other experiments included the Three-Dimensional Microgravity Accelerometer, Astroculture, Bioserve Pilot Lab, Commercial Generic Bioprocessing Apparatus, Commercial Protein Crystal Growth, Controlled Liquid Phase Sintering, and Immune Response Studies, among others. Another primary mission payload was the Wake Shield Facility, used to grow innovative thin film materials for use in electronics.[938]

STS-64, *Discovery*'s nineteenth mission, launched on September 9, 1994, carried the Lidar in Space Technology Experiment (LITE), which was used to perform atmospheric research. This was the first flight of LITE, which involved the use of lasers for environmental research. During the mission, the crew also released and retrieved the SPARTAN-201. The flight included the first untethered EVA since *Discovery*'s STS-51-A ten years earlier.[939]

Discovery's twenty-third mission, STS-85, launched on August 7, 1997, was dedicated to scientific experiments and testing hardware for the ISS. The primary mission was to deploy and retrieve the Cryogenic Infrared Spectrometers and Telescopes for the Atmosphere-Shuttle Pallet

---

[936] NASA KSC, "STS-42 (45)," June 29, 2001, http://science.ksc.nasa.gov/shuttle/missions/sts-42/mission-sts-42.html.
[937] NASA KSC, "STS-56 (54)," June 29, 2001, http://science.ksc.nasa.gov/shuttle/missions/sts-56/mission-sts-56.html.
[938] NASA KSC, "STS-60 (60)," June 29, 2001, http://science.ksc.nasa.gov/shuttle/missions/sts-60/mission-sts-60.html.
[939] Rumerman, *U.S. Human Spaceflight*, 56.

Satellite-2 (CRISTA-SPAS-2), previously flown on STS-66 in 1994. It was the fourth in a series of cooperative ventures between the German Space Agency and NASA. This payload measured trace gases and dynamics of the Earth's middle atmosphere. CRISTA-SPAS-2 flew for about 200 hours before *Discovery*'s crew retrieved it. A number of experiments were conducted throughout the mission, including the study of a robotic arm created by the Japanese Space Agency for use on the ISS.[940]

Astronaut John Glenn gained fame in 1962 when he was the first American to orbit Earth. Thirty-eight years later, Glenn, then a 77-year-old United States senator, returned to space as a payload specialist for STS-95, *Discovery*'s twenty-fifth mission. The effect of microgravity on human aging was studied. The launch on November 29, 1998, was witnessed by President Bill Clinton, a first for a sitting president.[941] The primary objectives of the mission were to conduct a variety of science experiments in the pressurized SPACEHAB module, focusing on life sciences, microgravity sciences and advanced technology. In addition, the SPARTAN satellite was deployed and retrieved to study the sun. The crew also tested components planned for installation on the HST during the next servicing mission.[942]

Mir Support

Two *Discovery* missions, STS-63 in 1995 and STS-91 in 1998, supported the Shuttle/*Mir* Program. The first was to practice a rendezvous with the Russian space station, and the second marked the last time a shuttle docked with the station.[943]

STS-63 launched without incident on February 3, 1995. The primary focus of the mission was to perform a rendezvous and fly around of *Mir* to verify flight techniques, communications, and navigation sensor interfaces, and engineering analyses associated with shuttle/*Mir* proximity operations in preparation for future docking missions.[944] *Discovery* came within just 37' of *Mir*, and photographs taken by the space station's crew marked the first time a shuttle was captured on film in space from another manned spacecraft. *Discovery*'s payload included the SPARTAN-204, which was deployed and successfully retrieved. STS-63 is associated with a number of "firsts," including the first spacewalk by an African American, Mission Specialist Bernard Harris, and the first female shuttle pilot, Eileen Collins.[945] Also, with this flight, *Discovery* became the first orbiter to complete twenty missions.

---

[940] NASA KSC, "STS-85 (86)," June 29, 2001, http://science.ksc.nasa.gov/shuttle/missions/sts-85/mission-sts-85.html; Rumerman, *U.S. Human Spaceflight*, 62.
[941] John Glenn's presence drew a lot of media attention, and the crew was interviewed by CBS news anchor Walter Cronkite and *The Tonight Show* host Jay Leno while in orbit.
[942] NASA KSC, "STS-95 (92)," June 29, 2001, http://science.ksc.nasa.gov/shuttle/missions/sts-95/mission-sts-95.html.
[943] Ross-Nazzal and Webb, "Major Milestones," 27.
[944] NASA KSC, "STS-63 (67)," June 29, 2001, http://science.ksc.nasa.gov/shuttle/missions/sts-63/mission-sts-63.html.
[945] Rumerman, *U.S. Human Spaceflight*, 53.

STS-91, *Discovery*'s sole mission to *Mir*, was the ninth and last time an orbiter docked with the Russian space station. The goal of this mission was to bring home Andrew Thomas, the seventh and final American astronaut to live aboard *Mir;* Thomas spent 130 days aboard the station. When *Discovery* launched on June 2, 1998, her payload held the SPACEHAB module, which contained supplies for *Mir*'s crew. The payload also contained an Alpha Magnetic Spectrometer, built by an international team of researchers to study the universe. The shuttle's robotic arm's new electronics and software were tested in preparation for the construction of the ISS.[946] After the orbiter docked with *Mir*, cargo was exchanged and Thomas boarded *Discovery* for the flight back to Earth. STS-91 also marked the first use of the new super lightweight tank.[947]

International Space Station Support

Discovery flew thirteen of her final fourteen missions to construct, supply, and exchange crews with the space station.[948] Two of these ISS support missions were part of RTF-2. *Discovery*'s goal for STS-96, her twenty-sixth flight, was to transport supplies to the as yet unmanned station. The shuttle launched on May 27, 1999, and carried the SPACEHAB module packed with equipment. She also carried both a U.S-built crane and a Russian-built crane, which were installed on the station. The STARSHINE satellite, partially built by an international group of high school students, was successfully deployed during the flight. Three days into the mission, *Discovery* became the first orbiter to dock with the ISS, and 3,567 pounds of supplies were unloaded. The crew also installed two new portable foot restraints, and attached three bags of tools and handrails to aid future ISS assembly operations.[949] After undocking, *Discovery* performed a flyaround of the ISS to obtain a detailed photographic record.[950]

STS-92, *Discovery*'s twenty-eighth flight, was the 100th mission of the SSP and included the 100th spacewalk. The orbiter launched on October 11, 2000, after four days of delays. *Discovery* carried the Zenith Port, or Z1, truss structure, which was installed on top of the *Unity* connecting node, and also delivered the Pressurized Mating Adaptor 3 (PMA-3), which was used as a docking port. After successful completion of four EVAs to attach the truss and set up the power supply, the shuttle landed at Edwards AFB on October 24, delayed two days because of bad weather.[951]

OV-103's twenty-ninth mission, STS-102, began at sunrise on March 8, 2001. The primary objectives of this mission were to replace the Expedition 1 crew and to unload supplies, equipment and science racks from the *Leonardo* MPLM. The crew attached a coolant pump and

---

[946] Rumerman, *U.S. Human Spaceflight*, 64.
[947] Gebhardt, "After 26 Years;" Rumerman, *U.S. Human Spaceflight*, 64.
[948] Duggins, *Final Countdown*, 112-161.
[949] NASA KSC, "STS-96 (94)," June 29, 2001, http://science.ksc.nasa.gov/shuttle/missions/sts-96/mission-sts-96.html.
[950] Rumerman, *U.S. Human Spaceflight*, 65.
[951] NASA KSC, "STS-92 (100)," June 29, 2001, http://science.ksc.nasa.gov/shuttle/missions//sts-92/mission-sts-92.html.

an External Storage Platform to the outside of the *Destiny* module.[952] *Discovery's* next mission, STS-105, launched on August 10, 2001, also carried the *Leonardo* MPLM, which contained additional scientific racks, equipment, and supplies. Another payload was the Materials International Space Station Experiments (MISSE), a project to fly materials and other types of space exposure experiments on the station. The MISSE experiments were the first externally mounted experiments conducted on the ISS.[953] During two spacewalks, the Early Ammonia Servicer was installed to provide a backup source of energy supply to the ISS, and heater cables and handrails were attached for the station's Starboard-zero (S0) truss structure, which was scheduled for delivery on a future mission. ISS Expedition Crew 2 was replaced by Expedition Crew 3.

After the *Columbia* accident on February 1, 2003, *Atlantis* originally was selected for RTF-2. However, corrosion was discovered on *Atlantis*' rudder speed brake system. Although *Discovery* had the same problem, NASA engineers calculated that OV-103's brakes could be fixed more quickly. Thus, *Discovery* was chosen to fly STS-114, her thirty-first flight and the first of two RTF-2 test missions. Following delays, *Discovery* finally lifted off on July 26, 2005. *Discovery's* flight was extensively documented through a system of new and upgraded ground-based and airborne cameras, as well as radar systems, laser systems on the OBSS, and sensors in the shuttle's wings. The primary objectives of this mission were to test and evaluate new safety procedures, and to conduct assembly and maintenance tasks on the ISS. On flight day three, the orbiter executed a rendezvous pitch maneuver, which flipped the shuttle end over end, allowing the crew to photograph the underside of *Discovery* and her heat-resistant tiles in detail. The payload included scientific experiments contained within the *Raffaello* MPLM. During the first two EVAs, in-orbit shuttle repair techniques were tested and work was completed on the space station. A third EVA tasked the crew with the first on-orbit repair of the shuttle heat shield, which entailed the removal of two protruding gap fillers.[954]

STS-121, the second RTF test flight, launched on July 4, 2006. This mission demonstrated techniques for inspection and protection of the shuttle's TPS and replacement of critical hardware needed for future ISS assembly. *Discovery*'s crew unloaded about 7,400 pounds of equipment and supplies from the *Leonardo* MPLM, including a new heat exchanger for the common cabin air assembly, a new window and window seals for the Microgravity Sciences Glovebox, and a spare EVA suit and emergency jetpack. This mission restored the station to a three-person crew for the first time since May 2003. It was also the most photographed shuttle mission in history.[955]

---

[952] Rumerman, *U.S. Human Spaceflight*, 68; NASA KSC, "STS-102 (103)," July 25, 2001, http://science.ksc.nasa.gov/shuttle/missions/sts-102/mission-sts-102.html.
[953] NASA KSC, "STS-105 (106)," October 2, 2001, http://science.ksc.nasa.gov/shuttle/missions/sts-105/mission-sts-105.html.
[954] NASA, "STS-114," November 23, 2007, http://www.nasa.gov/mission_pages/shuttle/shuttlemissions/archives/sts-114.html.
[955] NASA, "STS-121," November 23, 2007, http://www.nasa.gov/mission_pages/shuttle/shuttlemissions/archives/sts-121.html.

Discovery's thirty-third mission, STS-116, was among her most challenging. After a two-day weather delay, the spacecraft lifted off at 8:47 p.m. on December 9, 2006, the first night launch since the *Columbia* accident. *Discovery* carried several tons of equipment and supplies, most of which was contained in the SPACEHAB module. During four spacewalks, the crew added the P5 spacer truss segment, rewired the station's power system to support the ISS's final configuration and arrival of additional modules, and retracted the solar arrays that had folded improperly.[956]

Discovery began STS-120 on October 23, 2007, the shuttle's thirty-fourth flight. The payload bay held the Harmony Node 2 module that was used to connect the ISS to two laboratories. For the first time in history, both the Space Shuttle commander and ISS commander were women: Pamela Melroy on *Discovery* and Peggy Whitson on the ISS. The mission included an ISS crew exchange, and a risky spacewalk was completed to repair a torn solar array using improvised tools.[957] To maximize their time in orbit, *Discovery*'s crew reentered the atmosphere over the middle of the United States by the descending node reentry, a maneuver of descent discouraged after the *Columbia* accident.[958]

The goal of *Discovery*'s thirty-fifth mission, STS-124, was to deliver *Kibo*, the 32,500-pound Japanese Aerospace Exploration Agency's (JAXA) pressurized module, to the ISS. This mission was the second of three flights that brought components to complete the *Kibo* laboratory. The module was so large that *Discovery*'s orbiter boom was left at the ISS during STS-120 to provide sufficient space in the orbiter's payload bay. STS-124 marked the first time the JAXA flight control team activated and controlled a module from Kibo Mission Control in Tsukuba, Japan. In the third and final mission spacewalk, astronauts exchanged a depleted nitrogen tank, and removed thermal covers and launch locks from the newly installed *Kibo* hardware, and reinstalled a repaired television camera to the left P1 truss.[959]

STS-119, launched on March 15, 2009, was the 100th SSP mission since the *Challenger* accident. *Discovery* delivered two solar arrays and the S6 truss, which were installed during three EVAs. This addition expanded the capacity of the ISS, and enabled an increase from three to six resident astronauts. The crew also repaired the station's water recycling system before returning to KSC on March 27 after a crew exchange.[960] *Discovery's* next mission, STS-128, launched on August 28, 2009. The lift off for STS-128 was delayed a day by weather and then three more

---

[956] Anna Heiney, "STS-116 Delivers Permanent Power," December 22, 2006, http://www.nasa.gov/mission_pages/shuttle/shuttlemissions/sts116/launch/sts116_summary.html; NASA, "STS-116," April 2, 2008, http://www.nasa.gov/mission_pages/shuttle/shuttlemissions/sts116/main/index.html.
[957] NASA, "STS-120 (23rd Space Station Flight)," *NASA Facts*, 2007, http://www.nasa.gov/pdf/216375main_STS-120.pdf.
[958] Gebhardt, "After 26 Years."
[959] Anna Heiney, "*Discovery* Delivers a Module 'Filled With Dreams,'" June 19, 2008, http://www.nasa.gov/mission_pages/shuttle/shuttlemissions/sts124/launch/124_overview.html; NASA, "STS-124," June 20, 2008, http://www.nasa.gov/mission_pages/shuttle/shuttlemissions/sts124/launch/124_overview.html.
[960] Elaine M. Marconi, "NASA's STS-119 Mission: Boosting the Station Power," April 6, 2009, http://www.nasa.gov/mission_pages/shuttle/behindscenes/119_overview.html; NASA, "STS-119 Mission Information," April 16, 2009, http://www.nasa.gov/mission_pages/shuttle/shuttlemissions/sts119/main/index.html.

days by a faulty fuel valve on the ET. The *Leonardo* MPLM carried support racks, science racks, a freezer for sample storage, a new sleeping compartment, and the COLBERT, the Combined Operational Load Bearing External Resistance Treadmill. STS-128 also included an ISS crew member exchange. After three ISS maintenance EVAs, *Discovery* landed at Edwards AFB on September 11, delayed a day because of poor weather.[961]

Discovery's thirty-eighth mission began on April 5, 2010. STS-131 accomplished several milestones, including the last nighttime shuttle launch, the first time four women were in space together, the last SSP flight to include first-time astronauts, and the first time two Japanese astronauts were in space together.[962] *Discovery* carried the *Leonardo* MPLM containing over 17,000 pounds of supplies and equipment. During three EVAs, the crew replaced an ammonia tank assembly, retrieved a Japanese experiment, and switched out a rate gyro assembly on the S0 truss element. The Ku-band data transmission system failed to work once in orbit.[963] *Discovery* returned to KSC on April 20 after a day's delay.[964] The STS-131 mission lasted fifteen days, two hours, forty-seven minutes, and ten seconds, *Discovery's* longest duration flight.

Discovery's final flight, STS-133, was originally scheduled to launch on November 1, 2010. However, due to a variety of problems, including an O-ring seal failure, failure of the SSME-3 redundant controller, an ET leak, and damaged ET stringers, the launch date was incrementally pushed up to February 24, 2011.[965] The crew for STS-133 included Commander Steve Lindsey; Pilot Eric Boe; and Mission Specialists Michael Barratt, Nicole Stott, Alvin Drew, and Steve Bowen. Bowen replaced Tim Kopra, who was injured a month before *Discovery* launched. *Discovery*'s payload included Robonaut 2, the first human-like robot in space. Similar to a human in appearance and movement, Robonaut 2 was built to assist astronauts aboard the ISS with commonplace or dangerous tasks. OV-103 also carried the Permanent Multipurpose Module (converted from the *Leonardo* module), which contained scientific experiments and provided the ISS with storage space, and the Express Logistics Carrier 4, an external platform that holds large equipment. The crew unloaded the cargo, attached the Permanent Multipurpose Module, the last permanent pressurized piece of the ISS, and completed maintenance and repairs on the ISS during a pair of spacewalks. After extending her stay two days, *Discovery* landed at KSC on March 9 and became the first Space Shuttle to retire after a flight of twelve days, nineteen hours, four minutes and fifty seconds.[966]

---

[961] Steve Siceloff, "STS-128 Outfits Station for New Science," September 23, 2009, http://www.nasa.gov/mission_pages/shuttle/shuttlemissions/sts128/launch/128_overview.html.
[962] Gebhardt, "After 26 Years."
[963] NASA, "STS-131 Mission Information," April 27, 2010, http://www.nasa.gov/mission_pages/shuttle/shuttlemissions/sts131/main/index.html.
[964] Cheryl L. Mansfield, "STS-131: Teamwork Overcomes Mission's Challenges," April 23, 2010, http://www.nasa.gov/mission_pages/shuttle/shuttlemissions/sts131/launch/131mission_overview.html.
[965] Gebhardt, "After 26 Years."
[966] NASA, "STS-133 Mission Information," March 15, 2011, http://www.nasa.gov/mission_pages/shuttle/shuttlemissions/sts133/main/index.html.

IIE. Process Flow: Ground and Ferry Operations

Ground Operations

Typical Landing Procedures

Throughout an entire Space Shuttle mission, weather conditions at KSC were monitored by JSC's Spaceflight Meteorology Group. Considered part of the National Weather Service, they worked with the Range Weather Operations at CCAFS to prepare landing forecasts, using data gathered by instrumentation throughout KSC and at CCAFS. About five hours before touchdown, when the shuttle's crew began to prepare the orbiter for its return to Earth, other NASA astronauts flew reconnaissance planes along the planned landing approach to assist in the evaluation of weather conditions. Based on the gathered data, as well as how many days the orbiter had been in space, Flight Controllers at Mission Control decided if the orbiter would land at KSC's SLF as scheduled, later in the day, or over the next day or two.[967] Weather conditions that dictated if a landing at the SLF was possible included the amount of observed cloud cover below 8,000', the range of visibility, crosswind speeds, and thunderstorms in the vicinity. The decision to land at KSC, as well as the final "go/no go" for landing, occurred approximately thirty minutes prior to the deorbit burn (about ninety minutes prior to the landing).[968]

In addition to deciding whether the orbiter would land at KSC, Flight Controllers had to determine which of the two runway approaches would be used. There were two approaches to the KSC SLF Runway, Runway 15 from the northwest and Runway 33 from the southeast. The Flight Controllers used the wind direction and the angle of the sun to determine which runway approach was used. In ideal conditions, the orbiter landed into the wind, and the sun was outside of the pilot's field of view.[969]

Roughly two hours before touchdown, KSC's Orbiter Recovery Convoy began their preparations at the SLF. The Convoy consisted of approximately twenty-five specially designed vehicles and units, and 150 trained personnel, who performed safing operations, assisted the crew in leaving the vehicle, and prepared the orbiter for transfer to the OPF. Also around this time, SLF personnel began to periodically fire air cannons and circle the runway perimeter to clear the area of wildlife; they also walked along the Runway to check for foreign object debris (FOD) that

---

[967] If a landing at KSC was not possible, the principle alternative was a landing at Edwards AFB in California. Thus, similar weather monitoring procedures were carried out at both locations. NASA, *National Space Transportation System: An overview*, September 1988, 13; NASA KSC, "Landing the Space Shuttle Orbiter at KSC," news release, March 1992, revised October 1995, 7, http://www-pao.ksc.nasa.gov/kscpao/release/1992/1-92.htm.

[968] Since the orbiter reentered the atmosphere and landed in an unpowered, high-speed glide, once the deorbit burn was performed, the orbiter had to land; where the deorbit burn occurred was dictated by the landing site chosen. Patricia Slovinac, "Cape Canaveral Air Force Station, Launch Complex 39, Shuttle Landing Facility (John F. Kennedy Space Center)," HAER No. FL-8-11-J. Historic American Engineering Record (HAER), National Park Service, US Department of the Interior, April 2011, 17-18.

[969] Slovinac, "Shuttle Landing Facility," 18.

could potentially damage the orbiter. The walking activities continued until roughly fifteen minutes before landing; air cannons were regularly fired until touchdown.[970]

Approximately one hour before touchdown, the orbiter performed the deorbit burn. About twenty-five minutes before landing, the vehicle began to pass through the reentry blackout period, from which it emerged roughly twelve minutes before touchdown. At this point, the orbiter was roughly 550 miles from the SLF, at an altitude of about 34 miles (179,520'). When the vehicle reached the Gulf of Mexico (within 300 miles of the Runway and at an altitude of no more than 145,000'), the SLF's TACAN system began to communicate with the vehicle, providing azimuth and distance measurements to the on-board computers. About two minutes prior to touchdown, when the orbiter was approximately 10 miles from the designated Runway approach and at an altitude of roughly 15,500', the MSBLS took over for the TACAN system, to provide more precise guidance signals on slant range, azimuth, and elevation to the orbiter. As the orbiter approached an altitude of 12,000', the commander and pilot began to use different visual aids at the SLF to ensure that the vehicle was at the proper angle. The orbiter touched down at roughly the 2,500' mark on the Runway with its main landing gear, traveling at a speed of roughly 213 to 216 miles per hour.[971]

Once the orbiter came to a complete stop, the Orbiter Recovery Convoy began their work. First, a safety assessment team, fitted with special suits and breathing attire, checked vapor readings and tested for explosive and toxic gases, at a distance of about 1,250' from the orbiter. Once they declared the area clear, the special Purge and Coolant Umbilical Access Vehicles were brought in behind the orbiter, where they checked for hydrogen vapors. If there was no hydrogen, the umbilicals were connected and the vehicle was purged with air to remove any residual explosive or toxic fumes. All of this occurred within forty-five to sixty minutes following full stop.[972] When it was determined that the area in and around the orbiter was clear, the crew exited the orbiter into a crew transport vehicle.[973]

Once the orbiter's crew had left the vehicle, a team of support personnel entered the orbiter to prepare it for towing operations. Outside of the vehicle, technicians installed landing gear lock pins, disconnected the nose landing gear drag link, and positioned the towing vehicle in front of the orbiter. The orbiter was attached to the tow vehicle with a tow bar. Approximately four hours after landing, the tow vehicle pulled the orbiter from the Runway, along the Orbiter Towway, to

---

[970] Slovinac, "Shuttle Landing Facility," 18. For more information about the SLF and its design features, see Slovinac, "Shuttle Landing Facility."
[971] Slovinac, "Shuttle Landing Facility," 19.
[972] Slovinac, "Shuttle Landing Facility," 19. If hydrogen was detected, which never happened, the crew was immediately evacuated and the convoy personnel are cleared from the area. These same procedures were followed at EAFB. NASA, *An overview*, 13.
[973] It was at this point that responsibility for the vehicle passed from JSC to KSC. Slovinac, "Shuttle Landing Facility," 20. The same procedures were followed if the orbiter landed at EAFB. The orbiter was then ferried to KSC via a Shuttle Carrier Aircraft.

one of the OPF High Bays for between mission processing, which nominally required 125 days to complete.[974]

Orbiter Processing Activities

The first set of processing activities performed in the OPF High Bay were generally referred to as the "end-of-mission roll-in operations." Once the vehicle was aligned inside the High Bay, its "T-0" umbilicals were connected to ground support equipment within the facility, the orbiter's systems were connected to facility-provided utilities, and the vehicle's fuel cells were powered down. The orbiter was raised with hydraulic floor lifts, and mated to four orbiter jacks, two at the forward end and two at the aft end. The vehicle was then leveled, the connections were tightened, and the floor lifts were lowered. Two additional activities were begun during the "end-of-mission roll-in operations," and finished during the second set of operations. One task involved purging the three SSMEs to remove any moisture that was produced by the combustion of the LH2 and LO2. In addition, the cryogenic tanks for the orbiter's fuel cells were drained of residual reactants, and filled with gaseous nitrogen (oxidizer tanks) or gaseous helium (fuel tanks) to render them inert. A third task was to open the payload bay doors and install access platforms as required to support processing and safing activities.[975]

The second general set of operations performed in the OPF High Bay included "system safing and deservicing" activities. During this period, any remaining OMS and RCS oxidizer and fuel were drained, and the systems were purged. If necessary, the OMS pods and the FRCS module were removed and sent to KSC's Hypergol Maintenance Facility for further processing and maintenance. In addition, the three SSMEs were removed from the orbiter and taken to the SSME Processing Facility for processing.[976] Other activities included in the safing process were the removal, deservicing, and flushing of the waste control system; draining, filter removal, and purging of the potable water system and the water spray boilers; venting high pressure gases from the vehicle's ECLSS; and draining and purging the APUs.[977]

---

[974] Slovinac, "Shuttle Landing Facility," 20; USA, "Orbiter Processing Facility (Day One)," (presentation materials used for training, no date), 44. KSC had three OPF High Bays, distributed between two facilities (OPF and OPF-3). Prior to the *Columbia* accident in February 2003, when there were four active orbiters, the High Bays were assigned on a "first available" basis. Afterwards, the two bays in the OPF, High Bay No. 1 and High Bay No. 2, were devoted to *Atlantis* and *Endeavour*, respectively, and the OPF-3 High Bay (or High Bay No. 3) was dedicated to *Discovery*. Patricia Slovinac, "Cape Canaveral Air Force Station, Launch Complex 39, Orbiter Processing Facility, High Bay No. 3 (John F. Kennedy Space Center)," April 2011, 23.

[975] Slovinac, "Orbiter Processing Facility," 23-24; USA, "Day One," 44; USA, "Orbiter Processing Facility (Day Two)," (presentation materials used for training, no date), 3. See Slovinac, "Orbiter Processing Facility," for more information about the OPF and its design features.

[976] The SSME Processing Facility was attached to OPF-3. Slovinac, "Orbiter Processing Facility," 24; USA, "Day Two," 6. See Slovinac, "Orbiter Processing Facility," for more information about the SSME Processing Facility and its design features.

[977] Slovinac, "Orbiter Processing Facility," 24; USA, "Day One," 44; USA, "Day Two," 6-8.

The major phase of orbiter processing operations was the "system testing, verification, and servicing" of every required functional orbiter system. This included the OMS/RCS, the fuel cell system, the window cavity conditioning system, the GNC system, the communications system, the OBSS (following the *Columbia* accident), the RMS, the APUs, the mechanical systems, and structural inspections. As part of these routine operations, individual components of each system could be removed, inspected, tested independently, and then reinstalled. If the component sustained significant wear or damage, it was generally replaced and tested as part of the system to ensure compatibility. At the same time, if a particular component presented problems during the mission, the troubleshooting of those problems occurred during this phase, and included removal of the element and its repair or replacement.[978]

Also during this phase of operations, visual inspections were conducted on the orbiter's TPS, the landing gear, and selected structural elements to determine if they sustained any damage during the flight. If technicians discovered significant damage to a TPS tile, either they created a foam version of the tile using the tile cavity as a mold, or they took a set of photographic images of the tile cavity. They then sent this information to the Thermal Protection System Facility, where a new tile was produced and delivered to the OPF for installation.[979] If damage to an insulation blanket was discovered, the component could be removed and sent to the Thermal Protection System Facility for repair if appropriate, or to be used as a pattern for a replacement.[980] In addition, after every flight, NASA engineers re-waterproofed all components of the vehicle's TPS. The procedure was necessary because the dimethylethoxysilane burned out when the temperature reached 1,050 degrees F, and exposed the TPS to water absorption.[981]

All of the tires from the nose and main landing gear were sent to the Shuttle Wheel and Tire Shop within the VAB.[982] Here, a bead breaker was used to remove the tire from the rim, which was then split and cleaned. The old tire was sent to the Logistics Facility for scrap, and the new tire was brought in from Logistics and installed on the rim.[983] After this, the tire underwent an initial inflation and a twenty-four hour pressure check. If it passed, an electrical check was performed on the tire, followed by a second pressure check that lasted for forty-eight hours. If all went well, the tire was then placed in a large freezer for 96 hours, after which it was checked for air and nitrogen loss.[984] Once all of this was completed, three longer-term checks were

---

[978] Slovinac, "Orbiter Processing Facility," 24-25; USA, "Day Two," 9.
[979] In general, approximately seventy tiles were replaced on an orbiter after a flight.
[980] Slovinac, "Orbiter Processing Facility," 25; Patricia Slovinac, "Cape Canaveral Air Force Station, Launch Complex 39, Thermal Protection System Facility (John F. Kennedy Space Center)," HAER No. FL-8-11-L, Historic American Engineering Record (HAER), National Park Service, US Department of the Interior, April 2011, 18-21.
[981] Jenkins, *Space Shuttle*, 395-401.
[982] Patricia Slovinac, "Cape Canaveral Air Force Station, Launch Complex 39, Vehicle Assembly Building (John F. Kennedy Space Center)," HAER No. FL-8-11-B, Historic American Engineering Record (HAER), National Park Service, US Department of the Interior, July 2009, 18-19.
[983] The main tires (aft end) were generally good for one flight; the nose tires were good for two flights. Slovinac, "Vehicle Assembly Building," 18.
[984] This freezer test is highly important since it mimics conditions in space, and ensures that the tires are capable of being used for landing after a mission. Slovinac, "Vehicle Assembly Building," 19.

performed on the tires to certify them for flight. All of this required roughly sixty days to complete. Once certified, the tires were taken back to the OPF for installation on the orbiter.[985]

Another key task conducted during the "system testing, verification, and servicing" phase of orbiter operations was payload processing. The first step was to deconfigure the vehicle from the previous mission. This included disconnecting any vehicle power or mechanical systems that were attached to the previous payloads, removing any remaining payloads and their supports, and deconfiguring the appropriate control panels on the aft flight deck. The vehicle was then reconfigured for the next mission's payload requirements. Tasks included in this process were to install payload support mechanisms in designated places, perform payload pre-mate testing, configure the appropriate control panels on the aft flight deck, install the payloads, connect the payloads to the vehicle power and mechanical systems as required, and complete a payload integration verification test.[986]

OPF technicians also used this time to perform planned vehicle modifications, which were carried out in conjunction with the routine procedures. These changes to the vehicle were made based on future mission requirements, the need to resolve an identified deficiency, or to replace existing equipment with new, improved components designed to enhance the orbiter's performance.[987] The OPF High Bay also periodically served as the location for OMDPs and OMMs.[988]

One of the last tasks in the "system testing, verification, and servicing" phase of operations was a crew equipment interface test. For this procedure, the crewmembers for the upcoming mission traveled to KSC from their headquarters at JSC. They inspected the payload bay for sharp edges, which could pose a hazard to on-orbit operations, and familiarized themselves with the locations of specific payloads and how they would be accessed during the mission. In addition, the crew familiarized themselves with the arrangement of the middeck level of the crew cabin, including

---

[985] Slovinac, "Vehicle Assembly Building," 19.

[986] Slovinac, "Orbiter Processing Facility," 25; USA, "Day Two," 16-19. Payloads were processed separately from the orbiter. Historically, payloads fell into one of two categories, horizontal payloads, meaning they were built up, integrated, and installed into the orbiter horizontally, or vertical, meaning they were built up, integrated, and installed into the orbiter vertically. Typically, all of the payload components were fabricated at their sponsor's laboratories, before being delivered to one of several facilities at KSC or CCAFS for additional processing for flight. The components were then moved to one of four facilities for final integration and testing; afterwards, one of two payload canisters, carried by one of two canister transporters, picked up the payload at its processing facility for transport to either the OPF (horizontal payloads) or the launch pad (vertical payloads) for installation into the orbiter. Patricia Slovinac, "Cape Canaveral Air Force Station, Launch Complex 39, Canister Rotation Facility (John F. Kennedy Space Center)," HAER No. FL-8-11-K, Historic American Engineering Record (HAER), National Park Service, US Department of the Interior, April 2011, 14-15.

[987] Slovinac, "Orbiter Processing Facility," 25-26.

[988] Up through February 2001, the OPFs at KSC shared this duty with the Shuttle Orbiter Final Assembly Building (Building 150) at AFP 42 in Palmdale, California. Beginning with *Discovery's* third OMDP in September 2002, all Down Period and Major Modifications were completed at KSC. ACI and Weitze Research, "NASA-wide Survey and Evaluation of Historic Facilities and Properties in the Context of the US Space Shuttle Program, Air Force Plant 42, 1 North, Palmdale, California" (survey report, NASA JSC, 2007).

the stowage locations of equipment planned for use during the mission, as well as the airlock configuration.[989]

The final set of operations conducted in the OPF High Bay was referred to as "vehicle closeouts/preparations for roll-over." One of the tasks included reinstalling the SSMEs, which then underwent a leak test to ensure the integrity of the entire main propulsion system. The maneuvering capabilities of the engine gimbals, as well as all vehicle aerosurfaces, were then checked. Also during this time period, any issues discovered during the crew equipment interface test were resolved, an orbiter compartment positive pressure check was performed, and a final checkout of the TPS was conducted. Technicians also serviced the potable water system, the gaseous nitrogen pressure vessels, and installed the electrically-initiated pyrotechnic devices. As the final checks were completed for each of the systems, the access panels were reattached to the vehicle.[990]

Various additional activities were completed in the OPF High Bay just prior to the vehicle's roll-over to the VAB. First, a weight and center of gravity verification of the vehicle was performed. Then, the orbiter transporter was brought into the High Bay, and the orbiter was mated to it through one forward attach point and two aft attach points. Then, the final landing gear strut inspection was performed, the tires were pressurized, and the wheel wells were inspected. Following these steps, the landing gear was retracted, and the doors closed. Once this was completed, the technicians performed the final power down of the vehicle and removed all connections to facility services, the attach points between the orbiter and the transporter were confirmed, and the transporter carried the orbiter out of the High Bay.[991]

Space Shuttle Vehicle Stacking Operations

In preparation for vehicle stacking procedures in the VAB, the Crawler Transporter (Crawler) left its parking site, and using the special "Crawlerway," was driven to the MLP parking site.[992] There, one of three MLPs was attached to the Crawler at four places; the Crawler lifted the platform and carried it to the east side of the VAB, where it entered either High Bay 1 or 3. Once in position in the specified High Bay, the MLP was lowered and mated to six support pedestals,

---

[989] Slovinac, "Orbiter Processing Facility," 26; USA, "Day Two," 20.
[990] Slovinac, "Orbiter Processing Facility," 26-27; USA, "Day Two," 21.
[991] Slovinac, "Orbiter Processing Facility," 27; USA, "Day Two," 22-25.
[992] The Crawlers were constructed during the Apollo era, with the specific task of transporting assembled space flight vehicles from the VAB to the launch pad. For a detailed description of the Crawler, see Patricia Slovinac, "Cape Canaveral Air Force Station, Launch Complex 39, Crawler Transporters (John F. Kennedy Space Center)," HAER No. FL-8-11-C, Historic American Engineering Record (HAER), National Park Service, US Department of the Interior, September 2009. The MLP provided a base for the vertical integration and stacking of the complete Space Shuttle vehicle, and served as a launch platform. For a detailed description of the MLP, see Patricia Slovinac, "Cape Canaveral Air Force Station, Launch Complex 39, Mobile Launcher Platforms (John F. Kennedy Space Center)," HAER No. FL-8-11-D, Historic American Engineering Record (HAER), National Park Service, US Department of the Interior, September 2009.

and the platform was then detached from the Crawler, which was lowered and driven out of the VAB.[993]

With the MLP in place, the first part of the shuttle to be stacked was either the starboard or port SRB aft motor, which was brought to the VAB from the Rotation, Processing, and Surge Facility. The motor was placed on its designated hold down posts, to which it was attached using pyrotechnic bolts. Then, either the next segment for that SRB, or the second aft motor was brought in and attached to its hold down posts. The SRB stacking operations followed these procedures until each booster was four segments high, with the joint seals being visually inspected after every segment was mated. Once all four segments for each SRB were in place, a leak check and decay test was performed to verify the system's integrity. After verification, the forward skirt/nose assemblies were brought to the VAB from the SRB Assembly and Refurbishment Facility for integration. Then, an alignment check was performed, and the integrated and automated systems were tested using the Launch Processing System (LPS) to simulate the ET and the orbiter. This entire process generally required eighteen to twenty-two working days to complete, assuming no problems.[994]

When stacking and testing of the two SRBs was complete, the ET was lifted out of storage in VAB High Bay 4. It was positioned alongside the bay where the vehicle was being stacked, and moved into place. The ET was then mated to the SRBs, after which an interface test was conducted to ensure that the SRBs and ET were communicating with each other properly. Typically, the ET mating process was completed over one working day, and the close-out and interface tests required two to three working days. Once this was complete, the orbiter was brought to the VAB for stacking.[995]

The orbiter (*Discovery*, *Atlantis*, or *Endeavour*) entered the VAB atop the orbiter transporter, and was positioned next to the High Bay where the stacking was taking place. While in the transfer aisle, the two overhead cranes were attached to the orbiter with special slings, and the orbiter was rotated to a vertical position. While in the vertical position, photographs were taken of the wing leading edges and the underside of the orbiter.[996] The orbiter was then lifted, carried into the High Bay, and lowered into position. The orbiter was first attached to the ET at its aft end, and then at the forward end. This process generally required seven working days. Afterwards, various check-out procedures were completed. As part of this process, all umbilicals were connected, and then electrical and mechanical verification tests were conducted to verify all connections.

---

[993] Slovinac, "Vehicle Assembly Building."
[994] Slovinac, "Vehicle Assembly Building," 16-17.
[995] Slovinac, "Vehicle Assembly Building," 17.
[996] This action was initiated in response to the *Columbia* accident. Once in space, the orbiter conducted a roll-over, which allowed the astronauts in the ISS to photograph the same areas. These images were sent to KSC, where they were compared with those taken in the VAB, to ensure the TPS was intact. Slovinac, "Vehicle Assembly Building," 17.

Following this, all vehicle and vehicle-to-ground interfaces were checked using the LPS. Finally, the pyrotechinic devices were installed on the vehicle.[997]

Once the Space Shuttle vehicle was ready to go to the launch pad, the Crawler returned to the High Bay, and was mated to the MLP. Then, the Crawler carried the Shuttle and MLP combination along the Crawlerway to either LC 39A (3.5 miles) or LC 39B (5 miles), at a speed of one mile per hour, requiring 160 gallons of fuel per mile.[998] With its leveling system, the Crawler was able to keep the Shuttle within one foot of vertical during the approximate six hour trip from the VAB to the launch complex. Inside the launch complex gate, the Crawler was slowed to approximately one-third of a mile per hour to travel up the 0.25 mile, five degree inclining ramp to the launch pad.[999]

Launch Pad Preparations

At the pad, the Shuttle and MLP combination was aligned and attached to the six standard support pedestals, as well as four additional supports, which help to stiffen the platform against rebound loads in the case of main engine cutoff.[1000] Afterwards, all ground electrical power, data and communications interfaces, and ET propellant transfer lines between the launch pad and the Space Shuttle were connected through the MLP's Tail Service Masts and validated.[1001] Once this was complete, the Crawler was driven to the outside of the launch complex's perimeter fence, where it waited to carry the MLP back to its parking site after the Shuttle was launched.[1002]

At the pad, the orbiter's propulsion, EPS, and ECLSS, as well as the vehicle itself, underwent their final preparations for flight. When the Space Shuttle reached the launch pad, the orbiter was missing its base heat shield carrier panels, a part of its TPS, because technicians needed to access the orbiter's aft compartment to complete the final processing of the SSMEs. At the pad, the SSMEs were subjected to a walkdown inspection, followed by a helium signature test to check for any systems leaks, an electrical system checkout, a ball seal leak check, and finally, a Flight Readiness Test to ensure that all of the hydraulic systems were working properly. The final closeout of the aft compartment typically occurred within one week prior to launch, after the "aft

---

[997] Slovinac, "Vehicle Assembly Building," 17-18.
[998] Unloaded, the Crawler can travel up to two miles per hour. The Crawlerway is an Alabama River Rock-covered roadway designed during the Apollo era to support the combined weight of the Crawler and the spacecraft. Slovinac, "Crawler Transporters," 16.
[999] Although the driving time typically amounted to six hours, the entire process could take twelve to fourteen hours. Slovinac, "Crawler Transporters," 16; Linda Herridge, "Crawler group keeps shuttle rolling along," *Spaceport News*, May 30, 2008, 8.
[1000] For a more detailed description of the Launch Pad, see Patricia Slovinac, "Cape Canaveral Air Force Station, Launch Complex 39, Pad A (John F. Kennedy Space Center)," HAER No. FL-8-11-F, Historic American Engineering Record (HAER), National Park Service, US Department of the Interior, August 2010.
[1001] Slovinac, "Mobile Launcher Platform," 14. The Launch Processing System, which controlled all launch operations from the LCC, was linked to the Space Shuttle/MLP through the Pad Terminal Connection Room within the pad hardstand. Slovinac, "Launch Complex 39, Pad A," 15.
[1002] Slovinac, "Crawler Transporter," 17.

confidence test," in which all aft systems were powered up to ensure everything was working properly. Once the aft compartment was closed, the base heat shield carrier panels were installed, and various checkouts and systems purges were performed in preparation for propellant loading; the final SSME checkouts were conducted the day before the scheduled launch.[1003]

Processing of the orbiter's OMS and RCS began approximately one week after the vehicle's arrival at the pad. Over a period of roughly seven days, these two systems underwent a propellant servicing process, which included filling the fuel and oxidizer tanks and checking for leaks or other problems. The orbiter's APU/hydraulic system also underwent final processing at the pad, which included filling the fuel tanks. Additional work on the APU system included servicing the gaseous nitrogen pressurization tanks; a hot fire of the APUs to be sure all components were working properly; and a leak test. The hydraulic components underwent their own specific tests.[1004]

Typically, small payloads were installed in the orbiter's payload bay while it was in the OPF High Bay; larger payloads, however, were installed at the launch pad. These payloads were brought to the launch pad inside one of two payload canisters, usually before the arrival of the Space Shuttle vehicle. The payload canister was lifted and aligned with the payload changeout room doors, and the payloads were then moved into the changeout room. After the Space Shuttle vehicle was in place and the rotating service structure was moved into position, enclosing the orbiter's Payload Bay, the payloads were transferred to the vehicle. Once the payloads were installed, all payload connections were made and a payload/orbiter interface test was conducted, followed by a payload contamination walkdown. After all these tasks were completed, the payload bay doors were closed.[1005]

Approximately two days before launch, the EPS's power reactant storage and distribution system tanks were loaded with LO2 and LH2. The three fuel cells were activated roughly fifteen hours before launch so technicians could perform a variety of tests to check for leaks or other problems.[1006] The processing of the orbiter's ECLSS was aided by the Environmental Control Systems Room below the pad surface, which provided air to the orbiter's crew cabin at specified temperatures, humidities, and pressures to maintain a controlled environment in these areas. Final checkout procedures on the ECLSS included a flash evaporator purge, necessary to ensure the system functions properly, as well as the removal of the plugs on the ammonia boiler, vacuum, and flash evaporator vent ports. Subsequently, the vacuum vent was purged every twenty-four hours in the event of launch scrubs, when the fuel cells were kept on-line.[1007] Approximately one week prior to the launch, pad personnel installed all of the equipment lockers and flight seats into the orbiter's middeck.[1008]

[1003] Slovinac, "Launch Complex 39, Pad A," 16.
[1004] Slovinac, "Launch Complex 39, Pad A," 17.
[1005] Slovinac, "Launch Complex 39, Pad A," 20-21.
[1006] Slovinac, "Launch Complex 39, Pad A," 17.
[1007] Slovinac, "Launch Complex 39, Pad A," 17-18.
[1008] Slovinac, "Launch Complex 39, Pad A," 18.

There was little processing work to be done on the SRBs at the launch pad. The only booster-specific process was the use of moveable carts to fill the SRBs' hydraulic power units with MMH. Additional work on the boosters fell under the procedures for overall Space Shuttle systems processing, which included various electrical tests and checkouts to ensure that the electrical systems and connections between the shuttle components were operational. One such test was the Range Safety System functional test to ensure that the shuttle's range safety system, meant to destroy the SRBs and ET in the event of a trajectory violation, was operational. Also performed was a checkout of the shuttle's pyrotechnic system, which included completing the wiring of all circuitry, resistance and load testing, and the final "Pyro Initiator Controller" test.[1009]

Launch Countdown

A call to stations from KSC's Launch Control Center firing room initiated the Shuttle countdown sequence.[1010] A typical Space Shuttle launch countdown began approximately seventy-two hours prior to launch, at T-43 hours and counting.[1011] For the next sixteen hours, final checkouts of the vehicle were conducted, software was loaded, and the middeck and flight deck platforms were removed. Around T-28 hours, preparations began for loading the orbiter's fuel cell power reaction and storage distribution systems. At T-27 hours and holding, a four-hour hold commenced while the launch pad was cleared of all non-essential personnel. When the countdown began again, the cryogenic reactants for the fuel cells were officially loaded into the storage tanks. Another hold began at T-19 hours and holding, when the orbiter's midbody umbilical unit was demated; this hold usually lasted about four hours.[1012] When the countdown began again, at T-19 hours and counting, final preparations were made for loading the ET with the fuel and oxidizer for the main engines, filling the water tank for the sound suppression system, and closing out the Tail Service Masts on the MLP.[1013]

At T-11 hours and holding, the orbiter's communications systems were activated. This hold sequence typically lasted twelve to thirteen hours. Once countdown resumed, the orbiter's fuel cells were activated, and non-essential personnel were cleared from the blast area. At T-6 hours and holding, typically a two-hour hold, the launch team verified that there were no violations of the launch commit criteria, and all personnel were cleared from the launch pad. In addition,

[1009] Slovinac, "Launch Complex 39, Pad A," 18.
[1010] For additional information on the Launch Control Center, see Patricia Slovinac, "Cape Canaveral Air Force Station, Launch Complex 39, Launch Control Center (John F. Kennedy Space Center)," HAER No. FL-8-11-A, Historic American Engineering Record (HAER), National Park Service, US Department of the Interior, January 2009.
[1011] The discrepancy between the official designation of T-43 hours and the reality that the clock was started roughly seventy-two hours prior to launch, was due to built in hold periods throughout the sequence, in which certain actions were performed, and conditions and processes were verified. These holds lasted from as little as ten minutes to as long as thirteen hours, assuming there were no unanticipated delays. Slovinac, "Launch Control Center," 17.
[1012] The orbiter midbody umbilical unit was comprised of flexible hoses that fed propellants, GN2 and GHe into the orbiter's fuel cells. Slovinac, "Launch Complex 39, Pad A," 17.
[1013] Slovinac, "Launch Control Center," 17.

fueling procedures for the ET began; ET fueling continued through the T-6 hours and counting stage. The two propellants, LO2 and LH2, were loaded onto the tank, through the two Tail Service Masts on the MLP; LO2 through the starboard mast and LH2 through the port mast. Gaseous nitrogen was pumped to a vent arm, with a vent hood at its end (commonly referred to as the "beanie cap"), to warm the oxygen vapors being vented at the top of the ET from the LO2 tank. This prevented ice from forming at the top of the tank, which could potentially break loose during launch and damage the orbiter.[1014]

At T-3 hours and holding, the final inspection team proceeded to the launch pad for a detailed analysis of the Space Shuttle vehicle. In addition, the closeout crew began to configure the crew module for countdown and launch. After this two hour hold, at T-3 hours and counting, the astronauts arrived at the launch pad and began their entry into the orbiter. Additional air-to-ground voice checks were conducted between the Launch Control Center and Mission Control. The orbiter crew hatch was closed and checked for leaks before the closeout crew retreated to the fallback area.[1015]

Beginning at T-20 minutes and holding, the Shuttle Test Director conducted the final briefings for the launch team, and preflight alignments of the inertial measurement units were completed. After this ten-minute hold, the countdown began again at T-20 minutes and counting. During this period, the orbiter's GPCs and backup flight system were switched to launch configuration, and the thermal conditioning for the fuel cells was begun. The final built-in hold occurred at T-9 minutes and counting, when the Launch Director, the Shuttle Test Director and the Mission Management Team confirmed a go/no go for launch. This hold varied in length depending on the mission. Final countdown began at T-9 minutes and counting. At this time, the automatic ground launch sequencer was started, and final tests and preparations for launch were completed.[1016]

At about two-and-a-half minutes before launch, the ET vent hood was raised, and its arm was retracted. The arm was not latched into place until SRB ignition (at lift-off) in the event of a hold on the launch, which allowed the arm to be re-extended. Ten seconds prior to SSME ignition, the hydrogen burnoff system, located within the MLP Tail Service Masts, engaged. This system eliminated any hydrogen molecules floating around the engines to prevent an explosion at launch. At sixteen seconds prior to SRB ignition, the water-based sound suppression system initialized from the water tower to the northeast of the launch pad. This water blanketed the surfaces of the MLP to absorb the acoustical pressures and prevent damage to the orbiter and its payloads.[1017]

[1014] Slovinac, "Launch Control Center," 17, Slovinac, "Launch Complex 39, Pad A," 18. At different stages during launch preparation and countdown, these lines fed propellants to the two OMS pods, the FRCS, the orbiter fuel cells, and the ET. Additionally, the masts provided umbilicals for various gases, including GH2, GO2, GHe, and GN2; connections for ground and flight coolants; lines for electrical power and purge air; and links for ground-to-vehicle data and communications.
[1015] Slovinac, "Launch Control Center," 17.
[1016] Slovinac, "Launch Control Center," 17-18.
[1017] Slovinac, "Launch Complex 39, Pad A," 18-20; Slovinac, "Mobile Launcher Platform," 15.

The Right SSME was ignited at T-6.60 seconds, followed by the Left SSME at T-6.48 seconds and the Center SSME at T-6.36 seconds. The SRBs were ignited at liftoff, or T-0. At SRB ignition, the pyrotechnic bolts that attached the boosters to their hold-down posts exploded. With this explosion, the stud to which the SRB was mounted was forced downward into a deceleration stand, and the pieces of the bolt assembly were captured within a spherical debris catcher at the top of the hold-down post. Once the Space Shuttle successfully launched, the MLP was left in place at the pad to cool, and was then washed down to remove any chemicals from the vehicle's propellants. Afterwards, all umbilicals and interfaces were disconnected from the launch pad, and the MLP was transported back to the VAB or the maintenance site by the Crawler.[1018]

Mission Control

Once the Space Shuttle cleared the Launch Pad's Fixed Service Structure, responsibility for the vehicle was transferred to Mission Control. Approximately two days before launch, the Ground Controller (see below) began to man his station, and communicate with the now powered-up vehicle at the launch pad. At T-12 hours to launch, the remainder of the flight controllers arrived at the flight control room, and began their preparations for the flight. The flight control team operated over three shifts, to cover the entire twenty-four hour day. There were twenty-three designated flight controller positions, as follows:

1. The Flight Director (FLIGHT) was the designated leader of the team, who controlled the overall mission and payload operations and made decisions with regards to the crew's safety.
2. The Mission Operations Directorate Manager (MOD) provided an interface between the Flight Control Room (FCR) and top NASA officials and mission managers.
3. The Spacecraft Communicator (CAPCOM) served as the link between the FCR and the astronauts.
4. The Flight Activities Officer (FAO) planned and supported all crew checklists, procedures and schedules, and planned and managed the orientation of the orbiter in space.
5. The Payload Deployment and Retrieval Systems (PDRS) Manager supported the operations of the remote manipulator system, or robot arm, and coordinated the deployment, retrieval, and positioning of satellites and other cargo.
6. The Public Affairs Officer (PAO) provided mission commentary to the news media and the public.
7. The Instrumentation and Communications Officer (INCO) monitored the in-flight communications and instrument systems, and controlled the orbiter's TV system.
8. The Data Processing Systems Engineer (DPS) Manager monitored the status of the data processing systems, including the five GPCs on the orbiter, the flight-critical and launch data lines, and the multifunction display systems. In addition, the manager watched the mass memories and systems level software.

[1018] Slovinac, "Mobile Launcher Platform," 15-16.

9. The Payloads Officer (PAYLOADS) coordinated the interfaces between the flight crew and the payload users, and monitored the on-board experiments and satellites.
10. The PAYLOADS console was shared with the Assembly and Checkout Officer (ACO), who was responsible for the development of ISS.
11. The Guidance, Navigation and Control Systems Engineer (GNC) monitored the vehicle's GNC system and advised the crew of any guidance hardware malfunctions. He/she also notified the flight director and crew of any impending aborts.
12. The Propulsion Officer (PROP) monitored and evaluated the orbiter's RCS and OMS jets and propellants.
13. The Flight Dynamics Officer (FDO) planned maneuvers and monitored trajectories.
14. The Trajectory Officer (TRAJECTORY) assisted the FDO during the dynamic phases of flight, and was responsible for maintaining the trajectory processors in Mission Control.
15. The Ground Controller (GC) monitored Mission Control hardware, software and support facilities. In addition, he/she maintained the links between the Ground Space Flight Tracking and Data Network (GSTDN) and the TDRSS, with Goddard Space Flight Center.
16. The Maintenance, Mechanical, Arm and Crew Systems Officer (MMACS) monitored the orbiter's structural and mechanical systems, and on-board crew hardware and equipment.
17. The Electrical Generation and Illumination Engineer (EGIL) monitored the orbiter's electrical systems, fuel cells and their cryogenics, the ac and dc circuits, pyrotechnics, lighting, and the caution and warning systems.
18. The Emergency, Environment and Consumables Operations Manager (EECOM) monitored the passive and active thermal controls, the cabin atmosphere, the avionics cooling, the supply and waste water system, and the fire detection and suppression system.
19. The Surgeon (SURGEON) monitored the crew's health and coordinated any medical operations.
20. The Rendezvous Guidance and Procedures Officer (RENDEZVOUS) monitored a shuttle mission during deployment, rendezvous and proximity operations, and docking and undocking operations.
21. The Ascent/Entry Guidance and Procedures Officer (GUIDANCE), who monitored the guidance and navigation systems and execution of crew procedures in an ascent abort contingency, shared a console with RENDEZVOUS.
22. The Booster Systems Engineer (BOOSTER) monitored and evaluated the MPS, SSMEs, SRBs, and ET during launch and ascent, and the MPS during entry.
23. The Extravehicular Systems Activities Director (EVA) coordinated spacewalks from both the shuttle and the ISS and shared a console with BOOSTER.[1019]

During the mission, each of the flight controllers had three to five specialists who monitored both ground and orbiter systems. This enabled a quick response to a contingency situation.

[1019] Patricia Slovinac and Joan Deming, "Mission Control Center (Building 30)" (documentation package, NASA JSC, 2011), 21-23.

Additionally, these specialists provided detailed analysis information to the controllers, if requested.[1020]

Ferry Flights

Turnaround Operations

According to Donald L. McCormack, NASA Ferry Operations manager, preparing the orbiter for ferry operation from Edwards AFB to KSC was done over a period of seven days. This was referred to as a "turnaround operation." After landing at Edwards, the orbiter was towed to Shuttle Area A at DFRC (at Edwards AFB), and "spotted" in the MDD.[1021] Operations performed during this time included the following:

- A dry nitrogen purge of the SSMEs to remove moisture
- Power reactant and storage distribution system off-load to remove the cryogenic oxygen and hydrogen from the tanks as well as fuel cell purging
- De-stowing the crew module to remove middeck payloads, the EMUs, and various other equipment
- Installing mechanical locks on the SSMEs and the elevon flight control surfaces to lock them into the position required for ferry
- Draining a small quantity of propellant from the OMS engine ball valves to prevent seal deterioration
- Installing the tail cone for the reduction of aerodynamic drag. The tail cone was attached to the orbiter's base heat shield at eight attach points. This was one of the last operations performed prior to actual mating, and took two to three shifts to accomplish. Tail cone installation typically began about five days after landing.
- Raising the orbiter about fifty feet. The SCA was towed into the MDD, and the orbiter was lowered into position on the SCA and attached at two aft and one forward points. These three attach locations were the same as those used when the orbiter was mated to the ET. The mate process typically took about twelve hours.[1022]

The around-the-clock turnaround operation team at Edwards AFB consisted of approximately 150 people, which included a large group from KSC who arrived about twenty-four hours after the shuttle landed.[1023] Typically, the orbiter was mated to the SCA and ready to be ferried within seven to nine days of landing.

[1020] Slovinac and Deming, "Mission Control," 23.
[1021] The MDDs located at both Edwards AFB and at the KSC SLF were specially designed and built to provide structural support for the mate (attachment) and demate (detachment) of the orbiter and the SCA. The mate and demate processes are relatively straightforward, and are essentially opposite of one another. Slovinac, "Shuttle Landing Facility."
[1022] McCormack, interview, 2-4.
[1023] McCormack, interview, 3.

Flight Procedures

The crew for the post-mission ferry flight consisted of two pilots and two flight engineers aboard the SCA. The flight path was not the same for each ferry operation. McCormack stated that "the weather always drives when we fly and the route we take."[1024] The orbiter could not be flown through rain, to prevent damage to the tiles. Severe weather also was avoided. Temperature and pressure were additional constraints; the minimum temperature was 15 degrees F and the minimum ambient pressure was 8 psia. Because of these limits, the SCA generally flew low, in the range of 11,000' to 16,000'.[1025] Before every flight leg, a weather briefing was conducted to determine if the flight could proceed. The SCA also was required to fly only during daylight hours. According to Flight Engineer Henry Taylor, the SCA was allowed to take off up to twenty minutes before sunrise, and had to land no later than twenty minutes after sunset. The mated SCA/orbiter could weigh no more than 710,000 pounds at takeoff.[1026]

The weight of the orbiter impacted the performance of the SCA. Variable orbiter weight resulted, foremost, from what was returned in the payload bay. The typical weight range for end-of-mission ferry flights was about 195,000 to 230,000 pounds.[1027] When the orbiters were initially delivered to KSC their estimated weights ranged from 158,289 pounds (*Columbia*) to 151,205 pounds (*Endeavour*), without the engines installed[1028]. Following the eight major modifications performed at Palmdale, orbiter weight ranged between approximately 154,000 and 161,000 pounds. The heaviest orbiter ever ferried was *Discovery* after STS-114; it carried a MPLM in the payload bay, and weighed almost 228,000 pounds.

A "pathfinder" aircraft, flown by an experienced SCA pilot, took off prior to the SCA and flew approximately 100 miles ahead. The type of aircraft used as the pathfinder varied. In the winter, there were requirements to provide a heated purge of the orbiter at overnight stopovers if the overnight temperature was expected to be below 45 degrees F for more than four hours. Therefore, specialized purge equipment was needed. In these cases, a USAF C-141 or C-17 was used. When purge equipment was not needed, a NASA JSC aircraft, such as a KC-135 or a C-9, typically served as the pathfinder vehicle. The pilot in the pathfinder was in radio contact with the pilots in the SCA, providing guidance to safely navigate through challenging weather conditions.[1029] This aircraft also transported all required support equipment and the thirty to thirty-five person ferry flight team, including the ferry manager, weather officers, all the KSC support personnel, the mechanics and maintenance crew, and safety and security personnel.[1030]

[1024] McCormack, interview, 6.
[1025] McCormack, interview, 6.
[1026] Taylor, interview, 7.
[1027] McCormack, interview, 8.
[1028] The SSMEs added approximately 20,000 pounds to the total empty weight of each orbiter. NASA KSC, "Orbiter Vehicles," http://www.pao.ksc.nasa.gov/shuttle/resources/orbiters.html.
[1029] McCormack, interview, 8-9.
[1030] Taylor, interview, 22.

During the transcontinental trip between California and Florida, the SCA typically stopped several times to refuel. A heavier orbiter required at least three refueling stops, sometimes four. Historically, more than twenty military bases and a few international airports located across the southern one-third of the US supported ferry operations. Military bases were used almost all the time because of their security and support capabilities.[1031] Under the most favorable conditions, with good weather and a light orbiter, the cross country trip could be made in one day with two legs; with bad weather, it could stretch out to four days or more. Typically, a ferry flight was accomplished in three or four legs flown over a period of two to three days, with one or two rest stops. A refuel required only a few hours on the ground. The average fuel burn for the SCA during a ferry flight was about 5,750 gallons per hour.[1032] Each SCA contained seven fuel tanks, including four main, one center wing, and two reserve. "We normally only use fuel out of the mains and reserves," Taylor related.[1033]

Upon landing at a stopover, a safety assessment was performed before the flight crew could depart the SCA. This consisted of toxic vapor tests and visual inspections for damage performed by KSC personnel. In the case of an overnight stop, base security personnel set up a perimeter that was at least 200' from the SCA. Military personnel controlled the single entry point established and monitored the restricted area.[1034] When the plane landed at KSC, a safety assessment was conducted, and then the mated vehicle was towed to the MDD. Typically, within about sixteen hours, the orbiter was demated from the SCA and towed to the OPF.[1035]

[1031] Taylor, interview, 21.
[1032] McCormack, interview, 10, 12.
[1033] Taylor, interview, 7.
[1034] McCormack, interview, 12.
[1035] McCormack, interview, 15.

PART III. SPACE SHUTTLE MAIN ENGINE

Introduction

The Space Shuttle Main Engine (SSME) was the first and only fully reusable, high performance, liquid rocket engine in the world rated for human spaceflight. The staged combustion engine burned a mixture of LO2 and LH2 to lift the vehicle into space. The ET provided the fuel and oxidizer for the three SSMEs, which worked in tandem with the twin SRBs during the first two minutes of powered flight. The engines operated for an approximate total eight-and-one-half minutes from ignition to MECO, and burned over 1.6 million pounds (approximately 528,000 gallons) of propellant. The SSMEs powered the Shuttle with more than 1.2 million pounds of thrust.

The SSME staged combustion cycle burned the fuel in a two-step process. First, the dual preburners burned most of the hydrogen and part of the oxygen from the turbopumps, producing hydrogen-rich gas at high pressure and limited temperature. The flow of hot gas drove the turbines in the high-pressure turbopumps. The turbine exhaust flowed into the main combustion chamber, where the fuel was completely burned, producing hydrogen-rich gas at high pressure and high temperature. The exhaust from the main combustion chamber expanded through the nozzle to produce thrust. At sea level, the propellants provided each engine thrust levels of approximately 380,000 pounds at rated power level (RPL) or 100 percent thrust; 390,000 pounds nominal power level (NPL) or 104.5 percent RPL; and 420,000 pounds at full power level (FPL) or 109 percent RPL (or approximately 470,000 pounds, 490,000 pounds, and 512,000 pounds, respectively, in a vacuum).

The engines were throttleable in one-percent increments over a thrust range of 67 to 109 percent RPL. All three main engines received the same throttle command at the same time. This provided for a high thrust level during liftoff and initial ascent, but allowed thrust to be reduced during the final ascent phase. The engines were gimbaled to control pitch, yaw and roll during the ascent.

The SSME operated at greater temperature extremes than any mechanical system in common use today. Before ignition, the LH2, the second coldest liquid on Earth, was minus 423 degrees F. The combustion chamber reached 6,000 degrees F following ignition, which was hotter than the boiling point of iron. To meet the demands of the severe operating environments, exotic alloys were developed, such as NARloy-Z (Rocketdyne) and Inconel Alloy 718 (Special Metals Corporation).[1036] The latter, a nickel-based superalloy, was used in approximately 1,500 engine components and comprised roughly 51 percent of the SSME, by weight.

[1036] R.P. Jewett and J.A. Halchak, "The Use of Alloy 718 in the Space Shuttle Main Engine," in *Superalloys 718, 625 and Various Derivatives*, ed. Edward A. Loria (The Minerals, Metals & Materials Society, 1991), 749-760.

The three engines, almost interchangeable in the launch position, were referred to as the center (Engine 1), left (Engine 2), and right (Engine 3). The only difference among the three positions on the orbiter was that different areas of the nozzles required thermal protection from the external environment depending on orbiter position.[1037]

The nozzle, main combustion chamber, powerhead, low-pressure turbopumps, valve assemblies, and ducts were manufactured by Pratt & Whitney Rocketdyne[1038] in Canoga Park, California. The high-pressure turbomachinery for the last engine configuration flown on the Shuttle, the Block II SSME, was produced at the Pratt & Whitney Rocketdyne facility in West Palm Beach, Florida. The first flight for the high-pressure liquid oxidizer turbopumps occurred in 1995, and in 2001 for the high-pressure fuel turbopumps. Major SSME subcontractors were HR Textron (also known as Woodward HR Textron and Hydraulic Research, Inc.) in Valencia, California, for engine valve actuators and Honeywell, Inc. in Clearwater, Florida, for the main engine controller. Historically, more than thirty-five subcontractors in about twelve states contributed to the SSME project.[1039]

The SSME program was managed by NASA's Space Shuttle Project Office located at MSFC. Engines and engine components were tested at NASA's SSC in Mississippi. Over the course of the SSP, the SSMEs accumulated more than fifty-seven hours of flight time and another 246.7 hours of ground testing.[1040] Originally, the main engines were designed for fifty-five starts and 27,000 seconds of run time before needing replacement.[1041]

Reporting on the SSME program status as of October 1992, in response to a request from the House of Representatives' Committee on Science, Space and Technology, the SSME Assessment Team concluded that, "By all accounts, the SSME is a marvel of engineering achievement."[1042]

[1037] Katherine P. VanHooser, personal communication with James M. Ellis, MSFC, August 23, 2011.

[1038] Pratt & Whitney Rocketdyne, headquartered in Canoga Park, California, is a division of Pratt & Whitney, a wholly owned subsidiary of the United Technologies Corporation. The company was formed by North American Aviation (NAA). In 1967, NAA and Rocketdyne merged with the Rockwell Corporation to form North American Rockwell, later part of Rockwell International. The aerospace entities of Rockwell International, including the former NAA, and Rocketdyne, were sold to Boeing in 1996. In 2005, Boeing sold what was then called Rocketdyne Propulsion and Power to United Technologies Corporation, which they subsequently combined with their Pratt & Whitney Space Propulsion Division. The name of the corporate entity at the time of the relevant historical event is used throughout this section of the narrative.

[1039] NASA MSFC, Transition Project Office, "STS Stack" Recordation Data Package, June 15, 2009, Tab D: MSFC STS Element Major Hardware Suppliers.

[1040] Pratt & Whitney, "Pratt & Whitney Rocketdyne's Space Shuttle Main Engines Power Final Flight to International Space Station," P&W Press Release, July 8, 2011, http://www.pw.utc.com/media_center/ press_release/2011/ 07_jul/7-8-2011_00001.asp.

[1041] Originally, the main engines were contractually required to operate for 27,000 seconds consisting of fifty-five starts at eight minutes per flight. Jenkins, *Space Shuttle*, 412.

[1042] NASA, *Report of the SSME Assessment Team*, January 1993, i, http://ntrs.nasa.gov/archive/nasa/casi.ntrs.nasa.gov/19930012456.pdf.

Historical Overview

Early Engine Studies

Before the close of 1969, the STS had been generally defined as a two-stage, fully reusable spacecraft having high performance engines using LH2 and LO2.[1043] The engine would have a two-position bell nozzle, would be throttleable from 73 to 100 percent of rated power, and would operate at a 10 percent thrust level during on-orbit operations. The capability to run the engines at more than their maximum thrust rating also was specified.[1044]

A few months after the award of contracts for Phase A Shuttle feasibility studies, MSFC issued a RFP for SSME preliminary design studies. On April 30, 1970, NASA awarded parallel one year Phase B contracts to Aerojet General, Pratt & Whitney, and North American Rockwell/Rocketdyne to define SSME requirements.[1045] Each company received $6 million to study engine concepts and to produce prototype hardware, under the management of NASA's MSFC. The Phase B engine definition and preliminary design competition, which lasted almost one year, occurred at roughly the same time as the Phase B Space Shuttle studies by North American Rockwell and McDonnell Douglas, as well as the Phase A Alternate Space Shuttle studies.[1046] The SSME was considered the "pacing component of the Shuttle," and its development proceeded in tandem with that of the orbiter.[1047]

All three aerospace company competitors designed their engines for very high chamber pressure.[1048] Rocketdyne spent its own money to build a full-scale test version of the SSME that "could demonstrate a thrust of 415,000 pounds, stable combustion, a chamber pressure of 3,000 psi, and adequate cooling."[1049] This prototype SSME thrust chamber (partial engine) was fired successfully at the company's Nevada Field Laboratory near Reno during late 1970 and early 1971.[1050] As noted by Frank Stewart, a former deputy in the Engine Project Office, this "probably gave them the leg up" toward award of the later engine manufacturing contract.[1051]

[1043] Dunar and Waring, *Power to Explore*, 277-279.
[1044] Jenkins, *Space Shuttle*, 225.
[1045] Bob Biggs, "Space Shuttle Main Engine Development History," May 11, 2006, Pratt & Whitney Rocketdyne, Inc., presentation materials.
[1046] Dunar and Waring, *Power to Explore*, 288.
[1047] Dunar and Waring, *Power to Explore*, 284.
[1048] Baker, *Manual*, 96.
[1049] Jenkins, *Space Shuttle*, 110.
[1050] The Nevada Field Laboratory closed in March 1971 after nine years of operation, following completion of space shuttle engine tests. Archaeological Consultants, Inc. (ACI) and Weitze Research, *Historic Resources Survey and Assessment of the NASA Facility at Santa Susana Field Laboratory, Ventura County, California* (survey report, NASA MSFC, 2008).
[1051] Frank Stewart, interview by Jessie Whalen, Oral Interviews: Space Shuttle History Project Transcripts Collection, Report No. MHR-16 (Huntsville, AL: MSFC History Office, December 1988), February 4, 1988, 63; T. A. Heppenheimer, *History of the Space Shuttle* , vol. 1, *The Space Shuttle Decision: NASA's Search for a Reusable Space Vehicle* (Washington, DC: Smithsonian Institution Press, 2002), 102, 132.

NASA changed the baseline requirements for the SSME in January 1971, by raising the planned sea level thrust from 415,000 to 550,000 pounds. This was done to accommodate the DoD needs for increased payload capacity. The SSME Phase C/D RFP to build and test the SSME prototypes (Phase C) and to perform final design and manufacture (Phase D) was issued by MSFC on March 1, 1971. The shuttle configuration baseline in the RFP was a two-stage vehicle with both a manned fly-back booster and a piggy-back mounted orbiter. NASA specified that a single powerhead would serve for both the booster engine and the orbiter engine. The only clearly defined engine feature noted in the RFP was the bell-type nozzle.[1052] The three recipients of the Phase B engine definition contracts submitted proposals in April 1971, in response to the RFP.

At the time the RFP was let, the original concept of the Space Shuttle was undergoing redefinition. In order to lower costs and complexity, in May 1971, NASA decided that both the LO2 and LH2 propellants would be put in external propellant tanks. Further refinements and budget cutbacks followed, and in early 1972, the fly-back booster concept was abandoned in favor of reusable solid rocket boosters and a three-engine fly-back orbiter.[1053] The SSME was no longer required to be both a booster and an orbiter engine. The engine rated thrust level was reduced to 470,000 pounds (vacuum) with 109 percent emergency power level capacity.[1054]

Contract Awards

NASA's MSFC announced the selection of the Rocketdyne Division of North American Rockwell for the Phase C/D contract in July 1971.[1055] One month later, Pratt & Whitney contested this decision and filed an official protest with the U.S. Government's General Accounting Office (GAO).[1056] As a result, Rocketdyne's contract was put on hold until after a decision in the case was reached. On March 31, 1972, the GAO ruled in favor of Rocketdyne, and in May 1972, the SSME contract with Rocketdyne was confirmed.

While NASA began determining the final design requirements, the actual definition of "the physical, electrical, and functional interfaces" of the STS could not begin until after July 26, 1972, when the orbiter contractor was selected. Following the issuance of interim contracts to initiate work on SSME development and production, a definitive contract was signed on August 14, 1972. This SSME contract predated the awarding of the Shuttle orbiter contract.[1057] The SSME DDT&E contract (NASA No. NAS8-27980) called for ten development engines and three

---

[1052] Robert E. Biggs, "Space Shuttle Main Engine, The First Ten Years," in *History of Liquid Rocket Engine Development in the United States, 1955-1980*, ed. Stephen E. Doyle (American Aeronautical Society History Series, Volume 13, 1992), 5.
[1053] Dunar and Waring, *Power to Explore*, 284.
[1054] Biggs, "The First Ten Years," 5.
[1055] Dunar and Waring, *Power to Explore*, 288.
[1056] Biggs, "The First Ten Years," 69-122.
[1057] "Space Shuttle Main Engine Contract Signed with NAR," *Marshall Star*, August 23, 1972, 1-2.

flight engines for OV-102, with delivery of the first flight engines by 1977.[1058] It was not until early 1973 that MSFC provided Rocketdyne with specifications for the main engine, as described in the Interface Control Document (ICD), released in February, and the Contract End Item Specification (CEI), released in May. The ICD and CEI "contributed to development of detailed Design Verification Specifications, for the engine as a whole as well as for turbopumps and other components."[1059]

Rocketdyne designated their Canoga Park, California, facility as the manufacturing location for the engine, with engine system development testing to be conducted at the Mississippi Test Facility (MTF) near Bay St. Louis, Mississippi.[1060] Funding was provided for facilities changes needed at the Canoga Park manufacturing plant.[1061] NASA also made available $15.4 million in additional monies to Rocketdyne for modifying the Coca Area test stands (Coca I and IV) at their SSFL in California.[1062] These stands would accommodate static firings of individual SSME components, such as turbopumps and combustion devices, and combined SSME components.

In September 1974, the Shuttle Projects Office at MSFC assigned James L. Splawn as the NASA resident manager of the SSME office at Rocketdyne in Canoga Park, where he headed an on-site group of twenty-three MSFC employees.[1063] MSFC, working with Rocketdyne, designed each SSME for fifty-five flights and "an accumulative run time of 7.5 hours before overhaul."[1064] During the development and testing of the engine, MSFC conducted quarterly SSME reviews, and also established an SSME Hardware Simulation Laboratory (HSL) at the center in late 1974.[1065]

In May 1978, NASA purchased nine additional main engines from Rocketdyne under terms of a letter amendment to the original contract.[1066] Rocketdyne was authorized to manufacture and test an additional twelve SSMEs in November 1979, under the terms of a $365.7 million contract amendment.[1067] Seven years later, the company was awarded the Development, Flight &

[1058] "NASA Awards Contract for Shuttle Engine," *Marshall Star*, April 19, 1972, 2.
[1059] Heppenheimer, *The Space Shuttle Decision*, 133.
[1060] When first established in 1961, the MTF was known as the Mississippi Test Operations; it became the MTF in 1965. It retained this name until 1974, when it was renamed the National Space Technology Laboratories (NSTL). The facility became the John C. Stennis Space Center (SSC) in 1988, by Executive Order of President Ronald Reagan. SSC was responsible for flight green run testing of the SSME, as well as assembly and refurbishment of development engines. For ease of reference, the establishment will be referred to as SSC throughout the remainder of the document. NASA SSC, "John C. Stennis Space Center History, Chronology of Significant Events," October 5, 2007, http://www.nassa.gov/centers/stennis/about/history/chronology /chronology.html.
[1061] "Shuttle Facility Funds Provided," *Marshall Star*, October 25, 1972, 2.
[1062] Beginning in 1948, the SSFL in Ventura County, California, was used as a rocket engine testing facility; it is no longer in use. The Coca Area at SSFL supported the SSP from 1971 through 1988. ACI and Weitze, *Santa Susana Field Laboratory*.
[1063] "West Coast Marshall Employees Doing Essential Shuttle Work," *Marshall Star*, November 28, 1976, 1, 3.
[1064] "SSME: Powerful, Efficient, Reusable," *Marshall Star*, October 11, 1978, 3-4.
[1065] "SSME Simulation Facility Being Prepared at MSFC," *Marshall Star*, October 9, 1974, 1-2.
[1066] "NASA Buying 9 Additional Main Engines," *Marshall Star*, May 31, 1978, 3.
[1067] J. Mitchell, ed., *Thirty-Five Years in Power for America* (Canoga Park, California: Rockwell International,

Technology Test Bed contract (No. NAS8-40000), which was retroactive to May 1977, and extended until November 1996. The value at the end of this contract was $5.883 billion. Rocketdyne also was awarded the $1.5 billion SSME Recycle, Flight Support, and Block I and Block II Enhancements contract No. NAS8-45000 in June 1986. The period of performance was retroactive to September 1985, and extended through December 2001.

Additionally, NASA awarded a $1.07 billion DDT&E contract (No. NAS8-36801) to United Technologies/Pratt & Whitney in West Palm Beach for the alternate SSME high-pressure fuel and oxidizer turbopumps. The contract called for five production verification units of each type; the period of performance was from August 18, 1986, through September 30, 2005. Upon expiration, this contract was subsumed into contract No. NAS8-01140.[1068]

In May 2002, Boeing was awarded the SSME support contract (No. NAS8-01140) valued at $2.181 billion (as of Mod 114). The period of performance, retroactive to January 2002, extended through September 30, 2010. In April 2011, NASA executed a $36.9 million contract modification with Pratt & Whitney Rocketdyne to provide continued SSME prelaunch and launch support from April 1 through July 31, 2011. This modification to the original 2002 contract No. NAS8-01140 supported the SSME operations until the end of the SSP.[1069]

SSME Test Programs

> *"One thing that surprises a lot of people about the SSME is that each of those engines burns 1,000 pounds of propellants a second. When you combust hydrogen and oxygen, the exhaust is water vapor. So when they run a test, there'll be a big cloud of exhausted water vapor. If the wind conditions were right, and the cloud vapor floated over you, it would condense because it was cooler in the atmosphere than the exhaust, and it would pour down rain on you. We got wet once in a while."*
>
> - George D. Hopson, SSME Project Manager, MSFC [1070]

The SSME was developed and improved through decades of testing. All serialized parts for use in flight were limited to a maximum of 50% of the starts and seconds accrued on the fleet leader (similar non-flight part that had the highest number of starts or seconds).[1071] Under the leadership of J.R. Thompson, SSME Project Manager, deliberate flaws were introduced into the test

---

Rocketdyne Division, 1990), 30.
[1068] NASA MSFC, "STS Stack," Tab C.
[1069] "NASA Awards Space Shuttle Main Engine Contract Modification," April 03, 2011, http://www.aero-news.net/index.cfm?printable=1&ContentBlockID=1042 c1c3- fb8f-4777-03April2011.
[1070] George D. Hopson, interview by Jennifer Ross-Nazzal, *NASA STS Recordation Oral History Project*, July 20, 2010, http://www.jsc.nasa.gov/history/oral_histories/STS-R/HopsonGD/HopsonGD_7-20-10.htm.
[1071] Katherine P. Van Hooser and Douglas P. Bradley, "AIAA-2011-7159 Space Shuttle Main Engine – The Relentless Pursuit of Improvement," paper presented at the American Instutute of Aeronautics and Astronautics Space 2011 Conference, Long Beach, CA, September 2011.

engines. While this approach unnerved the senior management at NASA Headquarters, if such a flawed engine could successfully run the full duration test, it would demonstrate that the SSME was clear to fly.[1072]

At the inception of engine development, NASA's requirement was for 100 percent rated power level, referred to as RPL. RPL is equivalent to a sea level thrust of approximately 380,000 pounds and vacuum thrust of 470,000 pounds. One hundred and nine (109) percent power, originally called emergency power level, ultimately became referred to as Full Power Level or FPL. The original objective of certifying the SSME for operation at FPL was deferred because of development difficulties and delays. Instead, certification at 100 percent RPL became the objective for the baseline First Manned Orbital Flight (FMOF) engine.[1073]

Components Testing

The SSMEs manufactured at Rocketdyne's plant in Canoga Park were tested at both SSFL in California, and SSC in Mississippi. Collectively, these facilities evaluated the performance of every engine and engine component. Beginning with components and subsystems, then complete engines, the entire SSME development program entailed thousands of laboratory and hot fire tests.[1074] Initially, NASA's general approach was to test every component on its own, develop it, and have a certain maturity before the component went into an engine.[1075]

The Coca Area test stands at SSFL were selected for components testing (Figure Nos. C-1 through C-3). Coca I had separate test stands for oxygen and hydrogen turbopumps, while the Coca IV stand had two test positions used for igniters and preburners, respectively.[1076] The Coca Area had been inactive since late 1968, and work to prepare the test stands for the SSME was plagued by cost overruns and delays.[1077] Nevertheless, a SSME test program milestone was reached on April 15, 1974, with the first hot firing at the Coca I stand. This successful thirty-four second-run of a preburner assembly predated by one year the start of engine level tests.[1078] However, NASA's original plan to conduct turbopump component-level development tests was hampered by difficulties in manufacturing components on schedule, as well as by major facility failures.[1079] As a result, within a few years, the plan to test every component separately was

---

[1072] Smith, interview.
[1073] NASA, *SSME Assessment*, i.
[1074] Heppenheimer, *The Space Shuttle Decision*, 133.
[1075] Otto K. Goetz, interview by Jennifer Ross-Nazzal, *NASA STS Recordation Oral History Project*, July 20, 2010, http://www.jsc.nasa.gov/history/oral_histories/STS-R/GoetzOK/GoetzOK_7-20-10.htm.
[1076] Heppenheimer, *The Space Shuttle Decision*, 137.
[1077] Rockwell International, "SSME Facilities Review Meeting," SHHDC-260 (Huntsville, AL: MSFC History Office, February 20, 1974).
[1078] "Rocket Test Firings to Resume at NSTL," *Marshall Star*, April 24, 1975, 2; "Rocketdyne is SSME builder," *Rockwell News* (April 1981), 3; Royce E. Mitchell, interview by Jennifer Ross-Nazzal, *NASA STS Recordation Oral History Project*, June 30, 2010, http://www.jsc.nasa.gov/history/oral_histories/STS-R/MitchellRE/MitchellRE_6-30-10.htm; Bob Biggs, "The First Ten Years," 1.
[1079] NASA, *SSME Assessment*, i.

abandoned in favor of testing the engine itself.[1080] The A-1 and A-2 test stands at SSC, previously used to test the Apollo/Saturn V boosters, became the site for sea level static (stationary) firings of single engines. By 1974, engineers were busy converting the stands to test the SSME.[1081] In retrospective, J.R. Thompson observed that abandoning component testing and "going directly to the engine, running head-on with the problems that had to be solved," was very satisfactory.[1082]

The Coca test stands continued to be used, but typically only on smaller components. However, component testing of preburners, valves, nozzles, main combustions chambers, and controllers at SSFL made only modest progress. Following a fire on Coca I in February 1976, Rocketdyne discontinued separate testing of the oxygen turbopumps; these components were tested as part of complete engines at SSC instead. Fuel turbopump testing continued at Coca I until September 1977, when further testing was halted. After twenty-seven months, only three oxygen turbopump assemblies had run a total of twenty-four times for a cumulative time of 161 seconds. During the same period, six fuel turbopump assemblies were tested twenty-seven times for a cumulative run time of 111 seconds.[1083]

Engine-Level Test Program

The prototype development main engine, SSME 0001, alternately known as the Integrated Subsystem Test Bed (ISTB) engine, was completed by Rocketdyne at the Canoga Park facility in March 1975, then delivered to SSC for static firing tests about one month ahead of schedule.[1084] Larger and heavier than a flight-type engine, the ISTB engine was "primarily a tool to develop the engine start sequence and the engine shutdown sequence."[1085] It included turbopumps, combustion devices, controls, and a shortened nozzle. Since the controller was not yet ready for use, the ISTB used a rack-mounted laboratory computer, located remotely.

The first ISTB test, without ignition, took place on May 19, 1975, followed by the first main chamber ignition test on June 24, 1975.[1086] After ignition tests were completed, subsequent firings were targeted for higher thrust levels to evaluate engine starting characteristics and performance.[1087] The first mainstage[1088] test of the ISTB, a 3.38-second firing on Test Stand A-1, was a program milestone as the engine reached and stabilized at 50 percent of rated thrust, the

---

[1080] Goetz, interview.
[1081] "SSC plays vital role in history of NASA space flight," *Lagniappe*, January 2004: 5.
[1082] J.R. Thompson, interview by Jennifer Ross-Nazzal, *NASA STS Recordation Oral History Project*, May 13, 2011, http://www.jsc.nasa.gov/history/oral_histories/STS-R/ThompsonJR/ThompsonJR_5-13-11.htm.
[1083] Heppenheimer, *Development of the Space Shuttle*, 156.
[1084] "First Shuttle Main Engine Completed a Month Early," *Marshall Star*, March 26, 1975, 1, 4.
[1085] Goetz, interview.
[1086] "First Shuttle Engine Ignited," *Marshall Star*, June 11, 1975, 4; "Space Shuttle Main Engine reaches milestone," *Lagniappe*, January 2004: 1, 5.
[1087] "Major Milestone Reached in Space Shuttle Program," *Marshall Star*, July 2, 1975, 1, 4.
[1088] During mainstage testing, all engine components operated at a thrust level in the normal flight range of the shuttle orbiter. Mitchell, interview.

minimum power level.[1089] Testing of the ISTB engine was "stuck at low power" for almost one year due to problems with the fuel turbopump, which delayed the attainment of 100 percent power level.[1090] First identified in March 1976, the fuel turbopump's subsynchronous whirl problem involved violent rotor instability, which caused failure of the turbine end bearings. According to J.R. Thompson, the whirl problem was solved by inserting a small paddle, which allowed for adequate cooling of the bearings.[1091] Engineers stiffened the shaft and bearing supports, and new dampening seals around the carriers of the bearings in the turbopumps were installed.[1092]

Testing of the second and third development engines was started in 1976. On March 12, 1976, one engine successfully demonstrated a 65 percent power level for 42.5 seconds.[1093] Following the critical design review in September 1976, the SSME was approved for production. Early 1977 marked the first testing of the development engines at RPL. Development engine SSME 0002, fitted with a flight-configuration nozzle, was fired successfully using the altitude test position on Test Stand A-2 in March 1977. An objective of this test was to verify throttle capabilities from 50 percent to 109 percent of the 470,000 pounds thrust level at altitude.[1094] Engine 0003 was tested in the A-1 Stand, at the sea level test position at rated thrust conditions for sixty seconds of the total eighty-second test duration.[1095] On March 24, 1977, during testing of Engine 0003, failure of a lift off seal in the high-pressure oxidizer turbopump resulted in a fire. Replacement of the seal by a KEL-F labyrinth seal solved the problem. Later, this modification became a permanent design change.[1096]

By the end of March 1977, more than 150 engine firings had been conducted at SSC since initiation of the test program in May 1975, and more than 3,500 seconds of firing time had been accumulated (see Figure Nos. C-4 through C-15 for a pictorial representation of the testing process).[1097] Future tests were designed for longer-duration firings at rated conditions, as well as long-duration firings at various thrust levels, to demonstrate satisfactory engine operation simulating the anticipated mission thrust profiles.

Notwithstanding the successes, individual engine testing proceeded slowly due to a variety of technical problems, mostly in the high-pressure fuel turbopump. These problems, primarily mechanical in nature and materials, included deteriorating bearings, faulty seals, and turbine blade dampers. According to Heppenheimer, three issues stood out: "unbalance in the turbine rotor, inadequate cooling of the turbine bearings, and poor load distribution and load-carrying

---

[1089] "First SSME Mainstage Test Fired at NSTL," *Marshall Star*, February 11, 1976, 1.
[1090] Goetz, interview.
[1091] Thompson, interview.
[1092] Goetz, interview.
[1093] Jenkins, *Space Shuttle*, 225.
[1094] "High Altitude SSME Tests Start at NSLT," *Marshall Star*, January 12, 1977, 2.
[1095] "SSME Fired 60 Seconds At Rated Thrust Conditions," *Marshall Star*, March 16, 1977, 1.
[1096] Biggs, "Development History," 19.
[1097] "Space Shuttle Main Engine Is Throttled Successfully," *Marshall Star*, March 30, 1977, 1, 4.

capacity of both sets of bearings."[1098] Other significant challenges included start sequence problems, high-pressure oxidizer turbopump explosions, fuel preburner burn through, and nozzle steerhorn failures.[1099]

As recalled by Otto Goetz, SSME Chief Engineer and Project Manager, cracks in the turbine blades in the high-pressure fuel turbopumps were a big challenge. The fuel turbopump contained a total of 122 turbine blades, each measuring 1"-long x 0.5"-wide. At full power, these generated 600 horsepower (hp). The blades were cast from a nickel-based super alloy developed by Martin Metals.[1100] The first turbine blade failures were identified in mid-November 1977, and were attributed to blade fatigue and insufficient damping. According to Rocketdyne's manager of SSME development and chief project engineer Robert (Bob) Biggs, "a rigidly locked blade array . . . led to fatigue failures in the blade airfoil close to the root. The first blade failure would cascade to multiple blades." In one test, "the rotor seized stopping the fuel flow and resulting in significant erosion of the hot gas system."[1101] The design solution was the addition of lightweight precision-tolerance dampers. Other solutions to the turbine blade problem entailed replacement of the original blade material. To prevent cracking resulting from the 2,000 degree temperature difference between the core and exterior blade temperatures at the start sequence of the SSME, insulating material was added as a coating to the exterior of the turbine blades.[1102]

Biggs related that the SSME start sequence was difficult to develop due to very low inertia turbopumps, very high power densities, and a lack of auxiliary start power.[1103] Forty-two tests were required to complete the first start sequence. The engine also was very sensitive to small errors, such that a one-tenth of a second timing error could cause major damage.

Many of the engine components required redesign, which added time for required testing. As a result, by the beginning of 1978, NASA's cumulative test time was short of the targeted goal. "The original test plan of 1973 had called for cumulative run time to reach 38,000 seconds by the end of 1977. The actual total, 13,507 seconds, was barely one-third of this mark."[1104] Further, less than five percent of the total accumulated run time had been at the 100 percent RPL for 520 seconds, and no test had achieved 109 percent RPL.

On February 15, 1978, Dr. Myron (Mike) Malkin, NASA Headquarters Shuttle Program Director, instituted a moratorium on testing at 109 percent RPL until after STS-1. This ban was imposed by NASA management, "concerned that new problems at the high power level would

---

[1098] Heppenheimer, *Development of the Space Shuttle,* 150.
[1099] Biggs, "Development History," 10.
[1100] Heppenheimer, *Development of the Space Shuttle,* 152.
[1101] Biggs, "Development History," 24.
[1102] Goetz, interview.
[1103] Biggs, "Development History," 13.
[1104] Heppenheimer, *Development of the Space Shuttle,* 154.

detract from the effort required to support the first flight at rated power level."[1105] Engine 2004, used for 109 percent RPL abort certification, was exempted from the moratorium.

Several program milestones were reached during 1978. On May 10, Engine 0005 became the first to run at RPL for the full flight duration of 520 seconds. By August, this engine had accumulated more than 5,000 seconds of operation within a six week period, of which more than 4,500 seconds were at or above 100 percent of RPL.[1106] On September 7, 9, and 11, three test firings, each of 520-second duration, were completed at 100 percent of RPL. In a thirty-day period, ending September 11, the main engine logged twenty-two tests totaling 5,470 seconds of run time.[1107] In October, a static firing for more than thirteen minutes demonstrated the engine's capability to return the orbiter to its landing site in case of a mission abort during launch.[1108]

NASA's overall objective was to boost the accumulated firing time to meet their goal of 80,000 seconds, which was viewed as a necessary testing milestone prior to the first orbital flight of the SSP. To achieve this goal, Rocketdyne reactivated a test stand at SSFL. NASA contracted with Bechtel Corporation's Industrial Projects Group to modify the Coca I test stand, carried out in October and November 1978; this facility was renamed Test Stand A-3. The initial firing on November 7, 1978, was performed to check out the test stand, as well as to test the rebuilt SSME 0201. This engine, originally designed as Engine 0001, had previously completed sixty-seven tests on Test Stand A-1 and fifteen altitude tests on A-2 at SSC.[1109] Thirty-five consecutive firings, all at the scheduled duration, were made at SSFL during 1979 and 1980, in a prelude to the certification of individual engines for flight. Overall, the full-scale SSME firings at Test Stand A-3, which supplemented the sea level testing at SSC, were "crucial in identifying problems related to the initial designs of the high-pressure turbopumps, powerhead, valves, and nozzles."[1110] Also, initial trials of new modifications to the engine were run. Rocketdyne added personnel and ran the Coca A-3 test stand "around the clock, with a two-shift firing crew and a third shift for maintenance."[1111]

At the end of 1978, the SSME test program had accumulated 34,810 seconds in 394 firings. The total accumulated run time included 10,624 seconds at RPL, of which 3,521 seconds were for the full 520-second duration. As a result of an aggressive test schedule at both SSFL and SSC, the first 100,000 seconds of development test time were reached in five years and seven months

---

[1105] Biggs, "Development History," 32.
[1106] Engine 2005 was retired from service in November 1978 with more than 12,000 seconds of accumulated run time. Heppenheimer, *Development of the Space Shuttle*, 162; "SSME Runs Flight Duration at 100%," *Marshall Star*, May 17, 1978, 1.
[1107] "SSME Completes Three RPL Firings for Full Duration," *Marshall Star*, September 13, 1978, 1.
[1108] "SSME Passes Launch Abort Test at NSTL," *Marshall Star*, November 8, 1978,1.
[1109] "Engine Test Position," *Marshall Star*, October 25, 1978, 3; "First Checkout," *Marshall Star*, November 15, 1978, 4.
[1110] Fred Jue, "Space Shuttle Main Engine – Thirty Years of Innovation," (Canoga Park, California: The Boeing Company, Rocketdyne Propulsion & Power, no date), http://www.engineeringboeing.com/dataresources/ SpaceShuttleMainEngineThirtyYearsofInnovation.doc.
[1111] Heppenheimer, *Development of the Space Shuttle*, 164.

following the start of the SSME test program in 1974.[1112] Among other significant accomplishments, the engine testing program validated the design changes within the oxygen turbopump, and also confirmed the value of the improvements to the turbine blades.[1113]

Main Propulsion Test Program (1978-1981)

Static testing of individual engines at SSC and SSFL ran in parallel with tests of the Main Propulsion Test (MPT) Program, which was not part of the formal SSME development program.[1114] The purpose of this program was to evaluate the performance of the complete propulsion system and to certify it for operation prior to the first manned orbital flight of the shuttle. The Main Propulsion Test Article, or MPTA (also known as the Orbiter Boattail Simulator), built by Rockwell's Space Division, was comprised of three main engines plus a simulated orbiter midbody and a flight-weight aft fuselage to which the engines were fitted. LO2 and LH2 were fed to the engines from a 154' flight-type external tank. The orbiter simulator was delivered to SSC on June 24, 1977. The engines and external tank followed in July and September of 1977, respectively.[1115] The MPT Program was active between April 21, 1978, and January 17, 1981. During this time, a series of eighteen tests was completed, of which six lasted 520 seconds; the last test was the longest at 625 seconds.[1116] At its conclusion, the program accumulated a total run time of 3,775 seconds.[1117]

A one-second ignition test marked the first MPT Program test. Scheduled for a total run time of 2.35 seconds, an anomaly resulted in early termination.[1118] On May 19, 1978, a fifteen-second run marked the first major test firing of the Shuttle's main propulsion system. Over the next several months, additional tests were run to increase the duration of firing and the engine thrust levels until they were fixed at 109 percent RPL for about eight minutes at a time, which would simulate the conditions of an actual mission.[1119]

The MPT Program was beset with problems and delays, much like the component and single engine tests. On December 27, 1978, fire destroyed one of the three engines, halting further testing until May 1979. Rupture of a hydrogen line on an engine nozzle occurred in November

---

[1112] Jue, "Thirty Years."
[1113] Heppenheimer, *Development of the Space Shuttle*, 162.
[1114] The MPT hot firings were treated as tests of the orbiter, and did not count as part of the testing for SSME qualification. Heppenheimer, *Development of the Space Shuttle*, 459.
[1115] Orville Driver, interview by Jessie Whalen and Sarah McKinley, December 14, 1987, Oral Interviews: Space Shuttle History Project Transcripts Collection, Report No. MHR-16 (Huntsville, AL: MSFC History Office, December 1988), 5.
[1116] "MPT Firing Friday 'Very Successful' in 15-Second Run," *Marshall Star*, May 24, 1978, 1; "MPTA Series is Completed," *Marshall Star*, August 2, 1978, 1, 3; Karen J. Weitze, *Historical Assessment for the Equipment Boneyards, Marshall Space Flight Center* (survey report, NASA MSFC, 2004), 15-29.
[1117] NASA SSC, *Shuttle Survey Historic Eligibility Report for Stennis Space Center, Hancock County, Mississippi* (survey report, NASA SSC, 2007, 23.
[1118] "All Engines Fire in 1st MPTA Test," *Marshall Star*, April 26, 1978, 1.
[1119] "MPT Firing Friday," 1.

1979. After automatic engine cutoff, Rocketdyne shipped the damaged engine back to Canoga Park for analysis. Investigators from MSFC and Rocketdyne checked out all welds to determine how to correct the engine problem.[1120] The event further delayed the launch preparations for STS-1.

A milestone was reached in December 1979, with the first full duration run of the MPTA, lasting 550 seconds. On March 20, 1980, in the eighth test of the Shuttle's main propulsion system, the three SSMEs were static fired for 535 seconds. For the first time during the MPT program, the engines were gimbaled while a pogo effect was deliberately induced.[1121] The test was planned to demonstrate the engine accumulator system's capability to prevent pogo during flight. Additionally, for the first time, a thrust vector control (TVC) failure simulation was run to test whether redundant systems would perform properly in such an event during launch.[1122]

The test on May 29, 1980, used stub nozzles which were designed to allow the engines to be run at less than 90 percent of RPL at sea level. In this test, the three flight-type engines were throttled in stages from 100 percent rated thrust to 65 percent. Engine No. 3 was cut off at 530 seconds, Engine No. 2 at 545 seconds, and Engine No. 1 was kept firing at 65 percent until cutoff at 574 seconds. The July 1980, hot firing called for flight nozzles, which were not intended for use at less than 90 percent. This run was the first time the engine cluster achieved 102 percent of rated power.[1123] During the test, a burn-through occurred in the preburner chamber wall of Engine 0006. This engine was returned to Canoga Park for repair prior to the next test, scheduled for November 1980.[1124]

The November 3, 1980, test of the MPTA was automatically terminated at 21.74 seconds into the planned 581-second static firing. This occurred when sensors indicated that the high-pressure fuel turbopump turbine discharge temperature in the No. 2 engine exceeded acceptable limits. Initial inspection of the hardware revealed an irregular-shaped hole in the nozzle, caused by structural failure in the braze joint between the nozzle coolant tubes and the aft manifold.[1125]

The 596-second MPTA test on December 4, 1980, successfully achieved one of the major objectives of the program, to test the sensor which detects fuel depletion in the hydrogen tank and cuts off the engines. The test profile called for the three engines to begin at 100 percent RPL then be throttled briefly to 65 percent and then ramped up to 102 percent. During the test, Engine No. 1 ran for 590.69 seconds; Engine No. 2 was purposefully cut off at 442.01 seconds, and Engine No. 3 ran for 590.69 seconds. All three engines were gimbaled for approximately 300

[1120] "MPT Firing Ended After Nine Seconds," *Marshall Star*, November 7, 1979, 1-2; "MPT Failure Cause: Weak Weld Metal," *Marshall Star*, November 21, 1979, 3.
[1121] Pogo is a phenomenon involving low-frequency flow oscillations. Cf., Jenkins, *Space Shuttle*, 416.
[1122] "Eighth Main Propulsion Test is Successful," *Marshall Star*, March 26, 1980, 1.
[1123] "MPT Firing Conducted 'Without A Hitch," *Lagniappe*, June 18, 1980: 1, 6.
[1124] "Engine Returned to Support MPT," *Marshall Star*, October 1, 1980, 4.
[1125] "Two MPTA Firings Set for December," *Lagniappe*, November 26, 1980: 5.

seconds.[1126] The static firing brought the total test time on the main propulsion system to fifty-three minutes, seventeen seconds. This was in addition to the more than twenty-four hours of single engine tests conducted at SSC. Collectively, the accumulated firing time completed the certification requirements for the first Shuttle launch. The last test of the MPT Program occurred on January 17, 1981. Complete with simulated abort profiles, this 625-second firing was the program's longest test and the first at 102 percent of RPL using the flight-type nozzle.[1127] Orville Driver, MPT Deputy Manager at NSTL from 1977 to 1986, related that although some engines were certified for 109 percent of RPL, no three-engine cluster was ever tested at 109 percent.[1128]

Preliminary Flight Certification

Starting in 1979, the focus of the SSME test program shifted from proving that the design met the specified requirements to demonstrating the engine's reliability for flight, including the ability to handle abort missions. The Preliminary Flight Certification (PFC) test program entailed a series of tests called "cycles." Each cycle consisted of thirteen tests and 5,000 seconds of test exposure. All of the tests in each cycle had to be completely successful, and every engine component had to successfully complete the certification program.[1129] If there was a failure, the cycle needed to be restarted. Two PFC cycles on each of two engines of the flight configuration were required to certify that configuration for ten missions.[1130] The certification tests included evaluation of the start sequence; calibration tests to verify compatibility between hardware and software; firings at rated power at 520 seconds, plus with abort simulations at 665 (abort to orbit) and 823 seconds (return to launch site abort); as well as a 425-second run above RPL. Each redesign required certification, with each change run on one engine for 5,000 seconds, roughly the equivalent of ten flights.[1131]

The engines used for certification were not the ones scheduled to fly, since this test program "used up much of their life."[1132] Production Engine 2004 went through the first cycle between March 27 and June 27, 1979, and the second cycle from September 2, 1979 to February 8, 1980.[1133] Engine 0009, the flight spare for the orbiter *Columbia*, completed the first cycle in late August 1980, and the second in December 1980. The second cycle ended with accomplishment of an 823-second structural margin test designed to test distressed ball bearings in the liquid

---

[1126] "MPTA Static Firing Goes Exactly as Planned," *Lagniappe*, December 17, 1980: 3; "Two MPTA Firings," 1, 5.
[1127] Two of the three engines completed the 625-second duration; the engine in the No. 1 position shut down at 239 seconds. Jenkins, *Space Shuttle*, 227.
[1128] Driver, interview, 7.
[1129] Hopson, interview.
[1130] Jenkins, *Space Shuttle*, 227.
[1131] Bob Marshall, interview by Jessie Whalen and Sarah McKinley, April 22, 1988, Oral Interviews: Space Shuttle History Project Transcripts Collection, Report No. MHR-16 (Huntsville: AL: MSFC History Office, December 1988), 136.
[1132] Heppenheimer, *Development of the Space Shuttle*,166.
[1133] "Third Shuttle Main Engine On Its Way To Mississippi," *Marshall Star*, April 4, 1979, 1; "SSME Update," *Marshall Star*, June 27, 1979, 1.

oxygen turbopump.[1134] With this accomplishment, the FMOF configuration SSME was qualified for flight. In total, eight PFC cycles were completed prior to STS-1.

On March 13, 1980, the first full power test (109 percent of RPL) of the SSME was completed. Of the 125-second run on a single engine, ten seconds were at 109 percent of RPL, and twenty-six seconds were above the normal RPL. This milestone was a major step towards certification of the engine for FPL abort capability.[1135] Additionally, a goal of 65,000 seconds had been established by John Yardley, NASA Headquarters Associate Administrator for Manned Space Flight, as representing engine flight worthiness. This requirement for total accumulated test duration of a single engine was achieved on March 24, 1980, during a test on Engine 2004.

Acceptance Testing

Every engine that went on the orbiter was acceptance tested. Unless there was a rebuild, which would trigger the need for a new acceptance or green run test, testing was done once for each engine.[1136] If the engine passed, it was put into the flight pool.[1137] Engine 2005, earmarked for the first orbital flight of the SSP, was the first of the three-engine cluster to be delivered to SSC, in April 1979, for acceptance testing.[1138] Engines 2006 and 2007 followed. The acceptance test protocol at this point in the program included a 1.5-second start verification, a 100-second calibration firing, and a 520-second flight demonstration test. Engine 2007 was the first to complete the acceptance test requirements, and to qualify as the first flight engine for the SSP.[1139] Following successful completion of the test series, the three engines were shipped to KSC for installation on *Columbia*.[1140]

In preparation for STS-1, twenty-one engines had been tested, including the three scheduled to fly on *Columbia*. Approximately 575 single-engine tests had been conducted, totaling more than 77,000 seconds of run time.[1141]

[1134] "Space Shuttle Main Engine 0009 to Complete PFC Test Series," *Lagniappe* , August 22, 1980: 1, 3.
[1135] A malfunction of one engine could require thrust levels in excess of rated power from the other two engines to enable the Shuttle to achieve orbit or return for safe landing. "SSME Tested at Full Power," *Marshall Star*, March 19, 1980, 1.
[1136] Marshall, interview, 138.
[1137] Hopson, interview. Rocketydyne's contract with NASA stipulated that twelve flight-ready engines would be at KSC at all times.
[1138] "Third Shuttle Main Engine," 1.
[1139] Mitchell, interview.
[1140] "Columbia's Engines Complete Checks," *Lagniappe*, June 18, 1980, 1, 4; "Main Engine Recertification Tests Started," *Marshall Star*, June 4, 1980, 2.
[1141] D.J. Sanchini and H.I. Colbo, "Space Shuttle Main Engine Development," Microfiche No. SHHDC-3542 (Huntsville, AL: MSFC History Office).

Engine Testing Since 1981

Within one month of the launch of STS-1, 109 percent RPL certification testing was initiated. This series required two testing cycles each on two engines. Each cycle entailed a minimum of thirteen tests and 5,000 seconds, including 3,000 seconds at FPL, 380 seconds at 105 percent RPL, and 380 seconds at 111 percent RPL. Nine different normal and emergency test power level profiles were specified.[1142] Engines 2010 and 2013 were selected for FPL certification. The first cycle testing of Engine 2010 began on December 14, 1981, and concluded on February 9, 1982; the second cycle was run between February 19, 1982 and June 6, 1982. Overall, twenty-eight tests made up the first two series, resulting in 10,331 total seconds of which 6,650 seconds were at FPL.[1143] Testing of Engine 2013, begun on March 7, 1982, was prematurely concluded as the result of a catastrophic high-pressure fuel turbopump failure.[1144] As a result, Engine 2014 replaced Engine 2013 as the second FPL certification engine, requiring a fresh start. The first cycle began on May 15, 1982; the second cycle concluded on April 23, 1983. All tests were completed successfully with all requirements met. However, frequent replacement of the high-pressure oxidizer and fuel turbopumps was required. The two test cycles for Engine 2010 required a total of seven oxidizer and eleven fuel turbopump removals for repair, parts replacement, or configuration upgrade. Similarly, Engine 2014 required ten oxidizer and eight fuel turbopump replacements during its two testing cycles.[1145]

The December 18, 1982, flight readiness firing of the new orbiter *Challenger* included the new FPL configuration SSME Engines 2011, 2015, and 2012. The initial test indicated a large hydrogen leak. A follow-up test run on January 25, 1983, traced the leak to the main combustion chamber of Engine 2011. The problem had been caused by a crack in the coolant outlet elbow of the chamber, which resulted from a previous major repair. Engine 2011 was removed and replaced with Engine 2017, after spare Engine 2016 was found to be unacceptable for flight due to a heat exchanger leak.[1146]

Given the repeated major engine failures, in February 1983, NASA ordered an immediate halt to all FPL testing. This second moratorium closely followed the discovery of the small leak in Engine 2016's heat exchanger primary tube. In August 1983, the moratorium was rescinded when the SSME program was restructured into two separate and equal programs, Development and Flight. The Development program was charged with developing turbopumps for FPL (Phase II).[1147] However, it was not until the introduction of the Block II engine in 2001 that "109 percent became available on a routine basis."[1148] However, 109 percent remained reserved for

[1142] Biggs, "Development History," 43.
[1143] "Rocketdyne's SSMEs complete second series of full power tests," *Rockwell News*, June 25, 1982, 2.
[1144] Biggs, "Development History," 44.
[1145] Biggs, "Development History," 49.
[1146] Biggs, "Development History," 53-54.
[1147] Biggs, "Development History," 57.
[1148] Jenkins, *Space Shuttle*, 227.

contingency use only, in accordance with NSTS 12820 Space Shuttle Operational Flight Rule A4-53, "Use of Maximum Throttles."

Following eighteen problem-free launches, in July 1985, during *Challenger's* eighth mission (STS-51F), one of the SSMEs experienced premature shutdown, causing the vehicle to abort to orbit. Analysis indicated that the shutdown was due to faulty temperature sensors. Work on redesigned sensors had begun prior to STS-51F, and the new sensors were incorporated before the next flight. The only other instances in which flight engines were prematurely shutdown while on a vehicle were during five on-pad aborts which occurred before missions STS-41D, STS-51F, STS-55, STS-51, and STS-68 between 1984 and 1994. After each on-pad abort, the conditions causing the anomaly were understood and the engines were inspected or replaced prior to launch.

No engine tests were conducted for five months during the SSP stand down in the aftermath of the *Challenger* accident on January 28, 1986. As part of NASA's recovery efforts, the SSME program underwent a two-year review of requirements. Included in the design review were structural audits, thousands of weld assessments, and examination of 10,000 problem reports.[1149] As a result, a total of seventy-one engine design changes were identified.

On August 18, 1986, the Development and Flight SSME programs were reunited as one program. Around this time, MSFC awarded a contract to Pratt & Whitney in West Palm Beach, Florida, to design and develop the alternate high-pressure oxidizer turbopump and the high-pressure fuel turbopump for the SSME.

Prior to 1985, engine tests were conducted at a rate of approximately 33,000 seconds per year. Starting in 1987, the rate increased to about 43,000 seconds per year.[1150] The first SSME static firing following the *Challenger* accident was on June 26, 1986. During the test, Engine 2106 was ignited for 1.5 seconds on Test Stand A-2 at SSC. This was the first test in a series leading to a full-duration static test of 520 seconds on July 25, 1986. During 1987 and 1988, static firings of the SSMEs reached an "all time peak with a record firing of 1,040 seconds, the longest shuttle engine test ever conducted."[1151] This record was later broken by two test firings of 2,017 seconds each, performed just weeks before the RTF launch of *Discovery* on September 29, 1988.

Test Stand E-8 at Pratt & Whitney's facility in West Palm Beach supported development testing of the SSME alternate turbopumps, beginning in 1988. Thereafter, with the activation of the B-1 test stand on March 30, 1988, all SSME testing was consolidated at NASA's SSC. Test Stand B-1 began service with the ignition test of Engine 2206, followed by a twenty-five-second firing on April 9.

[1149] Biggs, "Development History," 62.
[1150] NASA, *SSME Assessment*, 11.
[1151] Mack R. Herring, *Way Station to Space: A History of the John C. Stennis Space Center* (Washington, DC: NASA Headquarters, 1997), 331-332.

Many milestones were achieved during the SSME testing program. The 500th engine test occurred on November 26, 1980.[1152] This achievement was doubled on February 25, 1988, with the 1,000th test firing of a SSME, and doubled again four years later, on July 24, 1992, with the 2,000th test firing. The ground test program for the Block II high-pressure fuel turbopump, started in late 1999, had accrued a total of 251 starts and 143,596 seconds of hot fire experience by March 2002. According to George Hopson, this hot fire accrual was comparable to the test time of 268 starts and 129,222 seconds for the Block I high-pressure oxidizer turbopumps.[1153] The SSME reached one million seconds of test and flight operations during a test firing at SSC on January 21, 2004.[1154]

In other program milestones unrelated to engine testing, in August 2003, the first overhaul of a Pratt & Whitney high-pressure oxidizer turbopump flight unit was completed. Refurbishment followed completion of the turbopump's first seven years of service, during which time it underwent five ground tests and flew on six missions. The fifteen-month overhaul and repair process entailed complete disassembly, inspection, and refurbishment, plus upgrade or replacement of components. Most major parts were reused. Pratt and Whitney's specified service duration before required overhaul for the LO2 turbopump was equivalent to eleven shuttle missions.[1155]

SSME Nozzle 5016, shipped in June 2011, was the last engine component delivered to KSC to support the SSP. All other parts had been made, and were refurbished as needed.

Phased Engine Development

Design improvements made throughout SSME's history significantly improved reliability, reusability, and maintenance. Significant changes to major components were introduced in groups in "block upgrades." The implementation of the Advanced Health Management System discussed below was the last major change to the engine. It culminated in a four-fold reduction in the probability of a catastrophic failure due to a SSME. Useable life on many components also increased significantly throughout the history of the project. Many major components were tested in excess of one hundred times. With the increases in reliability and durability of components, maintenance was significantly reduced. The time required to inspect and prepare an engine between flights over the course of the SSP was reduced by 57%.[1156]

[1152] "500th SSME Test Conducted at NSTL," *Lagniappe*, November 26, 1980, 1, 5.
[1153] George D. Hopson, "Atlantis STS-110 Space Shuttle Program SSME Flight Readiness Review," March 26, 2002, http://www.jsc.nasa.gov/news/columbia/frr/sts-110/11_ssme.pdf.
[1154] NASA SSC, "Chronology of Significant Events."
[1155] Pratt & Whitney, "Pratt & Whitney Delivers First Overhauled Space Shuttle Oxidizer Turbopump," August 2003, http://www.pw.utc.com/media_center/press_releases/2003/08_aug/8-22-2003_7412429.asp.
[1156] Van Hooser and Bradley, "Space Shuttle Main Engine."

According to Dewayne Collins, SSME Transition Manager, the alternate turbopumps represented the main technological improvement over the past two decades.[1157] Other noteworthy changes were the two-duct powerhead (Block I), the single-coil heat exchanger (Block I), and the large-throat main combustion chamber (Block IIA).

First Manned Orbital Flight SSME and Full Power Level SSME

The baseline, or FMOF, engine flew on the first five Shuttle missions at 100 percent RPL.[1158] Subsequently, the first improvement program, the Full Power Level SSME, was first flown on *Challenger's* mission STS-6, launched on April 4, 1983. This upgrade to the baseline configuration engine incorporated changes to the hot gas manifold fuel bowl liner, the fuel preburner, and the flowmeter. In the high-pressure fuel turbopump, the interstage seals were replaced and the turbine blade to tip seal clearance was increased. The housing material of the high-pressure oxidizer turbopump was changed to INCO 903. The blocking area of the low-pressure fuel turbopump was revised, and the turbine discharge turning vane in the low-pressure oxidizer turbopump was modified. Also, the tube wall thickness of the nozzle was increased, and a steam loop was added to the nozzle.[1159]

Phase II Engine

In 1983, NASA began the Phase II engine development program (Figure No. C-16). "The most significant improvements in the Phase II engine were in turbopump components and new and improved sensors."[1160] The latter included an improved hot gas temperature sensor, and the addition of a skin temperature sensor to the anti-flood valve. In addition, the pressure sensor cavity was modified and structural improvements were made to the spark igniter case. The Phase II engine first flew on *Discovery's* RTF mission, STS-26, launched on September 29, 1988.

Block I and Block II Engines

The next major step in engine advancement was replacement of the high-pressure turbopumps in order to meet NASA's goal of increasing the period of time between overhauls by flying ten times without removing the turbopumps. Pratt & Whitney was selected to provide redesigned alternate turbopumps. The primary objective for the turbopump redesign was to eliminate failure modes and vulnerablitlities in the heritage design. Some of the turbopump parts were originally built by welding together forged segments. These welds were expensive and time-consuming, and caused a lot of problems. Accordingly, elimination of the welds was a key specification in the Block I and II SSME design. Otto Goetz believed this was a major achievement, which

[1157] Dewayne Collins, interview with Joan Deming and Patricia Slovinac, April 8, 2010, MSFC.
[1158] Jue, "Thirty Years."
[1159] Fred Jue and Fritz Kuck, "Space Shuttle Main Engine (SSME) Options for the Future Shuttle," The Boeing Company (American Institute of Aeronautics and Astronautics, Inc., AIAA 2002-3758, 2002), 2.
[1160] Jue and Kuck, "Options for the Future," 1-2.

increased the reliability of the engine.[1161] Additionally, he considered the change to a different material for the Block I and II turbine blades, which eliminated the need for any coating on the airfoils, another significant improvement.[1162]

The **Block I** SSME was comprised of the Phase II base engine with the addition of an improved powerhead, single-coil heat exchanger, and a new high-pressure oxidizer turbopump made by Pratt & Whitney. The new two-duct powerhead, which replaced the three-duct design, improved the distribution of the fuel flow and reduced the pressure and temperature in the engine. It eliminated over seventy-four welds and had fifty-two fewer detail parts. The two-duct powerhead also featured new improved main injector and both preburner injectors, as well as a heat exchanger with no inter-propellant welds.[1163] The redesigned single-coil heat exchanger featured thicker walls, increased by 25 percent. The new high-pressure oxidizer turbopump included new ball bearings made of silicon nitride, a ceramic material 30 percent harder and 40 percent lighter than steel. This material greatly improved the wear performance and fatigue life of the turbopump bearings.[1164] The casting process used to produce the new high-pressure oxidizer turbopump eliminated all but seven of the 300 welds of the previous turbopump.[1165] The new turbopump also introduced a stiff single disk/shaft configuration and thin-cast turbine airfoils.

Certification testing on the new Block I configuration SSME was completed at SSC in March 1995 (Figure No. C-17). The new turbopump was designed for a life of sixty missions, and certified for ten flights without inspection, overhaul or maintenance.[1166] The first Block I flight engine (Engine 2036) was flown on *Discovery* (STS-70), launched on July 13, 1995; it flew in the center (No. 1) position.[1167] The same engine flew in the No. 3 position on *Endeavour* during mission STS-72, launched on January 10, 1996. On May 19, 1996, *Endeavour* (STS-77) was the first shuttle to fly with the full complement of three Block I SSMEs. The last flight of the Block I engine was STS-88 in December 1998.

The succeeding configuration, the **Block IIA** SSME, featured a new large throat main combustion chamber. The new chamber design increased throat diameter by 6 percent and decreased chamber pressure by 9 percent. Welded forgings were replaced by integral castings, resulting in the elimination of forty-eight welds.[1168] It also incorporated improved cooling

---

[1161] Goetz, interview.
[1162] Goetz, interview.
[1163] Biggs, "Development History," 63.
[1164] Jue, "Thirty Years."
[1165] NASA MSFC, "Space Shuttle Main Engine (SSME) Enhancements," NASA Facts, March 2002, http://www.nasa.gov/centers/marshall/ pdf/174534 main_ssme.pdf.
[1166] "Discovery lifts off with upgraded SSME; crew deploys TDRS-G," *Aerospace Daily*, Microfiche No. SHHDC-5884 (Huntsville, AL: MSFC History Office, July 14, 1995).
[1167] "Shuttle Flies With Block 1," *Aviation Week & Space Technology*, Microfiche No. SHHDC-5878 (Huntsville, AL: MSFC History Office, July 17, 1995).
[1168] Biggs, "Development History," 63.

capability for longer life. Overall, the throat of the new chamber was about 10 percent larger, which allowed the high-pressure turbopumps to operate at lower turbine temperatures and pressures.[1169] Royce Mitchell, former Deputy Manager for the SSME program, noted that this configuration was a significant step in safety and reliability. The large throat "reduced the pressure in the chamber, which meant all the pumps and all the rotating machinery and all the flow upstream of the reduced chamber could be relaxed, could be lower-pressure, lower rpm, and the safety of the main engine took a quantum leap when the Block II came along."[1170] The Block IIA SSME was first flown on *Endeavour* (STS-89) in January 1998; its last flight was STS-109 in March 2002.

The **Block II** configuration added a more robust high-pressure fuel turbopump developed by Pratt & Whitney and incorporated the changes made in the Block I and Block IIA engines. The design of the high-pressure fuel turbopump mirrored that of the high-pressure oxidizer turbopump. Welded sheet metal was replaced by precision investment castings, thus eliminating 387 welds for the housing. The alternate turbopump incorporated a stiff single-piece shaft/disk with thin-walled turbine blades. The new design also incorporated silicon nitride bearing elements similar to the upgraded high-pressure oxidizer turbopump, and eliminated the need for special airfoil coatings.[1171] The unique casting made the turbopump stronger and increased the number of flights between major overhauls. Although the new turbopump added 240 pounds of weight to the Shuttle, the engine was safer and more reliable because of increased turbopump robustness.[1172] Compared with the Phase II SSME, the Block II engine was twice as safe and required 57 percent less maintenance.[1173] It was designed for a life span of sixty starts.[1174]

Certification testing for the Block II high-pressure fuel turbopump began in late 1999 (Figure No. C-18). The first Block II engine (Engine 2051) flew on *Atlantis* (STS-104) in July 2001; the second was flown on *Endeavour* (STS-108) in December 2001.[1175] In April 2002, *Atlantis* (STS-110) was the first Shuttle to incorporate three Block II engines (Engines 2048, 2051 and 2045), which included the first full Pratt & Whitney suite of six high-pressure turbopumps. By this time, thirteen Block II high-pressure fuel turbopumps had been manufactured and delivered, and twelve units completed acceptance tests at SSC. A total of nineteen units had been scheduled for completion through manufacture by September 2002.[1176]

[1169] NASA MSFC, *Space Shuttle Main Engine Turbopump*, NASA Facts (Huntsville, AL: Marshall Space Flight Center, April 2005), http://www.nasa.gov/centers/marshall/pdf/113012main_shuttle_turbopump.pdf.
[1170] Mitchell, interview.
[1171] NASA MSFC, "Turbopump."
[1172] NASA MSFC, "Enhancements."
[1173] Jue, "Thirty Years."
[1174] Jenkins, *Space Shuttle*, 412.
[1175] One Block II configuration engine and two Block IIA engines flew on mission STS-104. "New main engine promises even safer shuttle ride," NASA News Release, April 26, 2001, http://spaceflight.nasa.gov/spacenews/releases/2001/H01-79.html.
[1176] Hopson, "Atlantis STS-110."

Advanced Health Management System

In 2000, NASA's MSFC began development of the **Advanced Health Management System** (AHMS), a modification of the existing Block II main engine controller. The AHMS became active on mission STS-117 in June 2007. This final enhancement of the SSME included the addition of advanced digital signal processors, radiation-hardened memory, and new software. These changes to the main engine controller provided the capability of monitoring the vibrations of the high-pressure turbopumps in such a way that made it possible "to analyze and discriminate true rotor unbalance from erroneous sensor readings."[1177] They could detect and track a very subtle shift in the engine's vibration levels in a split second, allowing the engine to be safely shut down.

SSME Physical and Functional Descriptions

SSMEs by the Numbers

With the final mission of the SSP, forty-six engines were flown in 135 launches for a total of 405 engine missions. Of the total engine missions, 273 were completed with the FMOF, Phase II, or Block I configuration engines; forty-nine were with the Block IIA configuration containing the new large throat main combustion chamber; and eighty-three were Block II configuration featuring both the large throat main combustion chamber and the new high-pressure fuel turbopump.[1178] Typically, existing engines were modified to incorporate the newest design. All seven newly manufactured Block I configuration engines (Engines 2036 through 2042) were upgraded, and all fourteen Block IIA configuration engines were modified to Block II when the new high-pressure fuel turbopump became available. Many components from the earlier Phase II and Block I engines were used for the upgraded engines.[1179] Two original FMOF engines, 2007 and 2015, each underwent two successive rebuilds to the Phase II and Block I configurations. Engine 2007 began service with STS-1, and flew on *Columbia's* initial five missions. It ended service with STS-52, launched in October 1992, its thirteenth flight.

The SSP lost six engines as the result of the *Challenger* and *Columbia* accidents. Of the three SSMEs lost on Challenger, Engines 2020, 2021, and 2023, Engines 2020 and 2021 had flown together on four of their five previous flights. Engines 2049, 2053, and 2055 were lost with *Columbia*. This had been the maiden flight of Engine 2055.

[1177] NASA MSFC, *Space Shuttle Main Engine Advanced Health Management System*, NASA Facts, (Huntsville, AL: George C. Marshall Space Flight Center, August 2007), http://www.nasa.gov/centers/marshall/pdf/186582main_REV_B_AHMS_Fact_Sheet_STS-118.pdf; Jue and Kuck, "Options for the Future," 2.
[1178] Pratt & Whitney Rocketdyne, Inc., "Space Shuttle Main Engine KSC Processing Nominal Flow (Landing to Launch)," no date, 26, presentation materials provided to Joan Deming and Patricia Slovinac, KSC, June 2010.
[1179] Jenkins, *Space Shuttle*, 420.

The SSP ended with fourteen SSMEs in the active fleet. All were Block II engines with a two-duct powerhead. In the heyday of the program, twelve engines were kept flight-ready. At any time, an average of two to three engines were out of service, and there were always six engines ready, including three on the orbiter vehicle and three ready to be swapped out, if needed.

Engine 2019 was the fleet leader during the SSP. It flew nineteen missions, beginning with the launch of STS-9 (*Columbia*) on November 28, 1983, and completed its service with the landing of STS-93 (*Columbia*) on July 27, 1999. The newest addition to the SSME fleet, Engine 2061, arrived at KSC on December 19, 2008.[1180] It flew only two missions, STS-130, launched on February 8, 2010, and STS-134, launched on May 16, 2011. Engines 2045, 2047, and 2060 were the last to fly out the program on STS-135 (*Atlantis*). Of these, Engines 2045 and 2047 were both veterans of fourteen previous missions. Engine 2017 was the only unmodified engine to fly on all five orbiters, on flights dating from STS-6 (*Challenger*) in April 1983, through STS-75 (*Columbia*) in February 1996.

General Description

Each SSME measured approximately 14' in length and 7.5' in diameter at the exit of the nozzle, and weighed approximately 7,775 pounds. The engine powerhead, the portion located above the nozzle, included the two high-pressure turbopumps and the main combustion chamber, plus the main injector and the two preburner injectors.

SSME Major Components

The SSME contained approximately 50,000 parts, of which 7,000 were tracked periodically for replacement.[1181] The major components included the low-pressure fuel turbopump, the high-pressure fuel turbopump, the low-pressure oxidizer turbopump, the high-pressure oxidizer turbopump, the hot gas manifold, the oxidizer and fuel preburners, the main combustion chamber, the oxidizer heat exchanger, the nozzle, and five propellant valves. Physical and functional descriptions of each major Block II engine component follow.

Low- Pressure and High-Pressure Turbopumps

Each SSME had two high-pressure turbopumps that supplied LO2 and LH2 to the engine's main combustion chamber. A turbopump is a single unit consisting of a pump, driven by a turbine, that boosts the pressure of the propellant. The low-pressure oxidizer and low-pressure fuel turbopumps were mounted 180 degrees apart on the engine. The ducts from the low-pressure

---

[1180] Helen Lewin, "SSME Planned Assignments Including Performance Impacts," Pratt & Whitney Rocketdyne, September 17, 2009, 20, http://rkdn.ksc.nasa.gov. Engine 2062 was also finished, but never acceptance tested. VanHooser, personal communication.

[1181] NASA KSC, *Space Shuttle Main Engine Processing Facility*, NASA Facts (Florida: Kennedy Space Center, 2006), http://www.nasa.gov/centers/kennedy/pdf/ 167449main_SSMEPF-06.pdf.

turbopumps to the high-pressure turbopumps contained flexible bellows that enabled them to flex when loads were applied.[1182]

The **Low-Pressure Oxidizer Turbopump** (Figure No. C-19) contained an axial-flow inducer driven by a six-stage hydraulic turbine. It boosted the LO2 pressure from 100 psia to 422 psia. The flow was supplied to the high-pressure oxidizer turbopump to permit it to operate at higher speeds without cavitating.[1183] The low-pressure oxidizer turbopump operated at approximately 5,150 rpm. It measured approximately 18" x 18", and was flange-mounted to the orbiter propellant ducting.[1184] A triple-redundant, magnetic-type, speed transducer was located on the turbine end.

The **Low-Pressure Fuel Turbopump** (Figure No. C-20) contained an axial-flow inducer driven by a two-stage, axial-flow turbine powered with gaseous hydrogen. It boosted LH2 pressure from 30 psia to 276 psia and supplied the high-pressure fuel turbopump. During engine operation, this pressure increase allowed the high-pressure fuel turbopump to operate at high speeds without cavitating. The low-pressure fuel turbopump operated at approximately 16,185 rpm. It measured approximately 18" x 24", and was flange-mounted to the SSME at the inlet to the low-pressure fuel duct.[1185] Foam insulation encased in a Kevlar jacket covered the pump housing.

The **High-Pressure Oxidizer Turbopump** (Figure No. C-21), which debuted in July 1995, contained a mainstage pump for all of the oxidizer flow and another for a portion of the oxidizer flow used to supply the preburners. The mainstage pump was a double entry centrifugal impeller flanked by two inducers. The preburner pump was a single centrifugal impeller. The turbopump had a common shaft and was driven by a three-stage, hot gas turbine. The main pump boosted LO2 pressure from 422 psia to 4,300 psia while operating at approximately 28,120 rpm. The turbopump provided 970 pounds of LO2 per second.

The high-pressure oxidizer turbopump discharge flow split into several paths, one of which was routed to drive the low-pressure oxidizer turbopump turbine. Another path was routed through the main oxidizer valve and entered the main combustion chamber. Another small path was tapped off and sent to the oxidizer heat exchanger, where it was vaporized and then used to pressurize the external tank. The final path entered the preburner impeller to raise the LO2's pressure from 4,300 psia to 7,420 psia for use in both preburners. The high-pressure oxidizer turbopump measured approximately 24" x 36", and was flange-mounted to the hot gas manifold.[1186]

[1182] USA, *Crew Operations,* 2.16-6.
[1183] Cavitation occurs when cavities of gas develop and collapse in liquid fuels.
[1184] USA, *Crew Operations,* 2.16-5.
[1185] USA, *Crew Operations,* 2.16-4.
[1186] USA, *Crew Operations,* 2.16-5, 2.16-6.

The **High-Pressure Fuel Turbopump** (Figure No. C-22), which debuted in July 2001, was the most complex component of the SSME. The three-stage centrifugal pump was driven by a two-stage, hot gas turbine. It supplied 162 pounds of LH2 fuel per second, boosted LH2 pressure from 276 psia to 6,515 psia, and operated at a speed of approximately 36,000 rpm, or 600 times per second. Because of the centrifugal force at this speed, the turbine blades, which normally weigh 13 ounces each, weighed the equivalent of 14 tons.[1187] The high-pressure fuel turbopump generated 70 hp for each pound of its weight, compared with an automobile engine, which generates about 0.5 hp for each pound of its weight. It measured approximately 22" x 44", and was flange-mounted to the hot gas manifold.

The discharge flow from the high-pressure fuel turbopump was routed through the main fuel valve and then split into three flow paths. One path was through slots in the jacket of the main combustion chamber, where the hydrogen was used to cool the chamber walls, and then delivered to the low-pressure fuel turbopump to drive its turbine. The second flow path, through the chamber coolant valve, supplied LH2 to the preburner combustion chamber and also cooled the hot gas manifold. The third hydrogen flow path was used to cool the engine nozzle. It then joined the second flow path from the chamber coolant valve.[1188]

Hot Gas Manifold

The hot gas manifold, the central component of the powerhead, was considered the structural backbone of the engine. It tied together and structurally supported the major components and almost all of the engine weight. Hot gas generated by the preburners, after driving the high-pressure turbopumps, passed through the hot gas manifold on the way to the main combustion chamber.[1189]

The hot gas manifold was manufactured in two halves which were joined together by electron-beam welding. The structural outer walls consisted of an alloy 903 sheet metal liner, with a space between the liner and wall cooled by hydrogen gas to reduce the outer wall temperature.[1190] The main injector was located in the center of the hot gas manifold. It included 600 coaxial elements which injected LO2 through their center posts. Flow shields, bolted to the outer row of elements, helped to protect them from damage and erosion from the high-velocity gas.

The redesigned two-duct hot gas manifold, first flown in July 1995, replaced the three small fuel ducts with two enlarged ducts. This modification significantly improved fluid flows in the system, decreased pressure and turbulence, and lowered temperatures in the engine during operation. As a result, the overall performance of the engine was enhanced and maintenance was reduced.

[1187] Goetz, interview.
[1188] USA, *Crew Operations*, 2.16-4, 2.16-5.
[1189] USA, *Crew Operations*, 2.16-7.
[1190] Jewett and Halchak, "Alloy 718," 754.

Preburners

Both the fuel preburner and oxidizer preburner were welded to the hot gas manifold. The first stage of combustion took place in the two preburners, where LO2 and LH2 were partially burned. The preburners produced hot gas that passed through the turbines to generate the power to drive the high-pressure pumps.[1191] The hot gas then passed through the hot gas manifold on the way to the main combustion chamber. Here, the addition of LO2 resulted in further combustion.

The structural body and inlet manifold of each preburner were machined from Inconel alloy 718 forgings and preformed sheet metal. These were joined by electron-beam and gas tungsten welding. The fuel preburner had an internal diameter of 10.43" and a combuster length of 4.37". The injector was made up of 264 coaxial elements, arranged in a concentric row pattern. Twenty-four of the elements supported and cooled three baffles that helped to stabilize combustion. An augmented spark ignition chamber was located in the center of the injector. The oxidizer preburner had an internal diameter of approximately 7.5" and a combuster length of 4.25". The injector was comprised of 120 coaxial elements, arranged in a concentric row pattern. Fifteen of the elements supported and cooled the three baffles. Of similar configuration to the fuel preburner, it contained a spark ignition chamber in the center of the injector. [1192]

Main Combustion Chamber

The main combustion chamber (Figure No. C-23), bolted to the hot gas manifold, was where the LH2 and LO2 from the fuel and oxidizer preburners were mixed and burned to provide thrust.

The main combustion chamber had to tolerate hot gases at temperatures up to 6,000 degrees F. It also had to contain the internal pressure of 3,000 psi. To meet these demands, Rocketdyne developed NARloy-Z, a high conductivity copper-based alloy that contained silver and zirconium. The exterior of the liner was made from structural nickel which was applied by an electroforming process. The support jacket of the main combustion chamber was made from Inconel alloy 718. The main combustion chamber was cooled by super-cold hydrogen, which flowed through 430 channels machined into the liner inner wall.

A small augmented spark igniter chamber was located in the center of the main combustion chamber's injector. The main injector measured approximately 17.7" in diameter at the end, and featured a barrel-shaped collection of 600 identical, non-baffle injector elements, arranged in concentric rings.[1193] Each element was a hollow cylindrical post through which hot gases flowed. The dual-redundant igniter was used during the engine start sequence to initiate combustion. The

[1191] USA, *Crew Operations*, 2.16-7.
[1192] Baker, *Manual*, 104.
[1193] Steven J. Wofford, personal communication with James M. Ellis, MSFC, August 31, 2011.

igniter was turned off after approximately three seconds because the combustion process was self-sustaining.[1194]

Heat Exchanger

Mounted in the oxidizer side of the hot gas manifold, the single-coil heat exchanger was made from a continuous piece of coiled stainless steel alloy tubing measuring 41' in length, and with an outer diameter of 0.50". It drew on engine heat from the turbine discharge flow from the high-pressure oxidizer turbopump to produce a flow of GO2 that pressurized the ET oxygen tank. Until mid-1995, the heat exchanger featured seven welds. The redesigned exchanger eliminated all seven welds and tripled the wall thickness of the tube. The increased thickness, to 0.032 inches compared with as thin as 0.0125 inches previously, served to reduce wear, and thus make catastrophic failures less likely. Maintenance time and post-flight inspections also were minimized.

Nozzle

The engine nozzle (Figure No. C-24) extended below the main combustion chamber. The velocity of the combustion gas was governed by the nozzle area ratio.[1195] The SSME nozzle measured 10.3" in diameter at the throat, and 90.7" at the nozzle exit. Total length of the nozzle was 121". The throat area measured approximately 93 square inches and the nozzle area was 50.265 square feet. The nozzle configuration underwent a number of successive design changes to meet requirements specifying an area ratio of 77.5:1 and a length equal to 80 percent of a fifteen degree conical nozzle.[1196] At 100 percent power level, propellants flowed through the nozzle at a rate of 1,035 pounds per second. "The nozzle accelerates the combustion products to 17,000 feet per second at the nozzle exit, generating 470,000 pounds of thrust at vacuum."[1197]

Coolant feed lines were located at the aft end of the nozzle. The inside wall of the nozzle was lined with 1,080, 1/8" stainless steel cooling tubes that carried hydrogen. The tubes were brazed to the surrounding structural jacket. During flight, a portion of the fuel was first circulated through the tubes before it was directed to the combustion chamber. Nine hatbands were welded around the jacket for hoop strength, and a hydrogen feed line ("steerhorn") measuring 1.625" in diameter also was attached to the nozzle exterior. Coolant manifolds were welded to the top and bottom of the nozzle, along with three fuel transfer ducts and six drain lines.

A support ring welded to the throat of the nozzle was the attach point for the engine heat shield. For protection from the high temperatures during the launch, ascent, on-orbit, and entry phases,

---

[1194] USA, *Crew Operations*, 2.16-7.
[1195] The nozzle area ratio is derived by dividing the nozzle exit area by the throat area. R.A. O'Leary and J.E. Beck, "Nozzle Design,"1992, http//:www.engineeringatboeing.com.
[1196] O'Leary and Beck, "Nozzle Design."
[1197] O'Leary and Beck, "Nozzle Design."

portions of the nozzle were insulated with four layers of metallic batting covered with a metallic foil (Nichrome) acting as a thermal shield, and closed out by a layer of fine weave Nichrome screen.[1198]

Propellant Valves

Each engine had five major valves: the oxidizer preburner oxidizer valve, the fuel preburner oxidizer valve, the main oxidizer valve, the main fuel valve, and the chamber coolant valve. These valves were hydraulically actuated and controlled by electrical signals from the engine controller.

The **oxidizer preburner oxidizer valve** and the **fuel preburner oxidizer valve** were used to control the thrust level of the engine. The speeds of the high-pressure oxidizer turbopump and high-pressure fuel turbopump depended on the position of these two valves. The valves increased or decreased the LO2 flow into the preburners, thereby increasing or decreasing preburner chamber pressure and high-pressure oxidizer turbopump and high-pressure fuel turbopump speed. This directly affected LO2 and gaseous hydrogen flow into the main combustion chamber, which in turn increased or decreased engine thrust. The fuel preburner oxidizer valve was used to maintain a constant six-to-one propellant mixture ratio.[1199]

The **main oxidizer valve** controlled LO2 flow into the engine combustion chamber. The **main fuel valve** controlled the total LH2 flow into the engine cooling circuit, the preburner supply lines, and the low pressure fuel turbopump turbine. When the engine was operating, the main valves were fully open. A **chamber coolant valve** was located on each engine combustion chamber coolant bypass duct. It regulated the amount of gaseous hydrogen allowed to bypass the nozzle coolant loop to control engine temperature.[1200]

Other SSME Components and Systems

Main Engine Controller

Each SSME had its own on-board digital computer, which monitored and controlled all engine functions and diagnostics. It could shut an engine down if it detected a problem. Instructions to the engine control elements were updated 50 times per second, or every twenty milliseconds. The pressurized, thermally conditioned controller, manufactured by Honeywell, was attached to the thrust chamber and nozzle coolant outlet manifolds on the low-pressure fuel turbopump side of the engine. Each controller contained two redundant digital computer units, and each Block II computer used Motorola 68000 32-bit microprocessors. The double-redundant system contained a total of four processors per controller. All the sensors and actuators were connected directly to

[1198] USA, *Crew Operations,* 2.16-7.
[1199] USA, *Crew Operations,* 2.16-8.
[1200] USA, *Crew Operations,* 2.16-8.

the controller. The microprocessors operated in "lock-step" within the dual central processing units (A and B). Prior to replacement by the Motorola processors, the controller used two redundant Honeywell HDC-601 computers.

The controller, operating in conjunction with the engine sensors, valves, actuators, and spark igniters, formed a self-contained system for engine control, checkout, and monitoring. It provided "engine flight readiness verification, engine start and shutdown sequencing, closed-loop thrust and propellant mixture ratio control, sensor excitation, valve actuator and spark igniter control signals, engine performance limit monitoring, and performance and maintenance data," as well as "onboard engine checkout, response to vehicle commands, and transmission of engine status." [1201]

The SSME controller processed four critical engine operating parameters and closely monitored them to see whether they remained within the specified limits (or "redlines"). A redline violation sensed by the controller caused it to automatically shut down the engine.[1202] In-flight parameters included:

- The high-pressure fuel turbopump's turbine discharge temperature not to exceed 1,860 degrees Rankine (R)[1203]
- The high-pressure oxidizer turbopump's turbine discharge temperature not to exceed 1,660 degrees R or fall below 720 degrees R.
- The high-pressure oxidizer turbopump's intermediate seal purge pressure not to fall below 159 psia.
- During steady state operation, the main combustion chamber's pressure not to fall more than 200 psia (400 psia, during throttling) below the reference chamber pressure.

Additional parameters were monitored on the ground prior to engine start, or following engine start but prior to SRB ignition. Exceedance of specified values for these parameters could also initiate a shutdown or inhibit engine start.

Bleed Valves

Two bleed valves were contained in each SSME, including one LH2 bleed valve and one LO2 bleed valve. The **liquid hydrogen bleed valves** were used to circulate LH2 through the engines

[1201] USA, *Crew Operations*, 2.16-9, 2.16-10.
[1202] USA, *Crew Operations*, 2.16-26. Redlines were designed to avert catastrophic failure by initiating engine shutdown. Synchronous vibration redlines were later added, with the incorporation of AHMS, for the high-pressure oxidizer turbopump and high-pressure fuel turbopump, bringing the total of active, in-flight redlines to six. The Phase II and earlier SSMEs had two more redlines. These were a secondary seal redline on the high-pressure oxidizer turbopump seal package, and a coolant liner redline on the high-pressure fuel turbopump. Wofford, personal communication; Jon D. Reding, personal communication.
[1203] Rankine is a temperature measurement unit equal to one Fahrenheit degree, and zero on this scale is an absolute zero. Under the standard atmospheric pressure 0 Rankine equals -459.67 Fahrenheit. This scale does not have any temperature below zero; Aqua-Calc. "What is Rankine," http://www.aqua-calc.com.

during prelaunch thermal conditioning. They also served to dump the LH2 trapped in the engines after MECO. The **liquid oxygen bleed valves** connected the engine internal LO2 lines to an overboard port. They were used only during prelaunch thermal conditioning.

Helium System

Helium was used to pneumatically close the five main hydraulically-actuated valves in the propellant lines should a hydraulic failure occur. The helium system also was used to purge the high-pressure oxidizer turbopump intermediate seals. Helium was injected between the seals to keep the hydrogen used to cool the turbine-end bearings from mixing with the LO2 in the pump end.[1204]

Pneumatic Control Assembly

Each SSME had one pneumatic control assembly. The assembly contained solenoid valves which were energized by commands from the SSME controller to control and perform various functions. These functions included "the high-pressure oxidizer turbopump intermediate seal cavity and preburner oxidizer dome purge, pogo system postcharge, and pneumatic shutdown."[1205]

Thrust Vector Control Actuators

Two main engine TVC actuators were connected to the powerhead of each SSME. One was for yaw and the other for pitch. The pitch actuator could move the engine 10.5 degrees up or down and the yaw actuator a maximum of 8.5 degrees up or down.[1206] Each actuator had its own hydraulic switching valve and received hydraulic pressure from the orbiter hydraulic systems.[1207] The actuators provided attitude control and trajectory shaping by gimbaling both the SSMEs and SRBs during first-stage and the SSMEs alone during second-stage. They changed each main engine's thrust vector direction as needed during the flight sequence.

SSME Process Flow

Since the arrival of the first SSME at KSC in 1979, Pratt & Whitney Rocketdyne was responsible for SSME processing. Historically, the engines were built and assembled at Rocketdyne's facility in Canoga Park, California (Figure Nos. C-25 through C-30), with flight inspections performed at KSC. With the completion of the Space Shuttle Main Engine

[1204] Mark Kirkman, "Space Shuttle Systems 101 – More Than You Ever Needed To Know About the Space Shuttle Main Engines," *InterSpace News*, July 27, 2008, 4, http://www.interspacenews.com/ FeatureArticle/tabid/130/ Default.aspx?id=2130.
[1205] USA, *Crew Operations*, 2.16-24.
[1206] Baker, *Manual*, 105.
[1207] USA, *Crew Operations*, 2.16-25.

Processing Facility (SSMEPF) in June 1998, both the SSME assembly and flight inspection functions were consolidated at KSC. The SSMEPF was designed specifically for processing the main engines in support of Shuttle flight operations. The specifications for the facility were developed by representatives from Pratt & Whitney Rocketdyne, NASA Design Engineering, and United Space Alliance (USA).[1208] The facility provided the capabilities for post-flight inspections, maintenance, and functional checkout of all engine systems prior to installation in the orbiter. Before completion of this facility, these operations were conducted in the VAB. Engine 2058 was the first to be fully assembled in the SSMEPF. Processing and assembly work began in February 2004.[1209] This engine was first flown on STS-115, launched on September 9, 2006.

Assembly Sequence of Major Hardware

The assembly of SSME major hardware followed a number of sequential steps, beginning with the attachment of the large-throat main combustion chamber to the nozzle (Figure No. C-31). Next, the powerhead was attached to the main combustion chamber (Figure No. C-32), followed by the high-pressure oxidizer turbopump (Figure No. C-33) and high-pressure fuel turbopump (Figure No. C-34) attachments to the powerhead. The attachment of engine ducts and lines followed (Figure No. C-35). Next, both the low-pressure oxidizer turbopump (Figure No. C-36) and the low-pressure fuel turbopump were attached to the powerhead, followed by the addition of the main fuel valve and main fuel valve assembly (Figure No. C-37). The fuel pump oxidizer valve and valve assembly followed (Figure No. C-38). The assembly process for major hardware was completed with the attachment of the main engine controller (Figure No. C-39).[1210]

Landing to Launch

The flow for the engines supported the larger vehicle flow, which began with the Shuttle landing and ended with the next launch. All aspects of the SSME flow were handled at KSC.[1211] Following the *Challenger* accident, new maintenance requirements mandated that all three engines be removed after each flight. Routine operational SSME turnaround involved three primary activities: 1) post-landing safety inspection; 2) processing for reuse; and 3) launch preparation.[1212]

[1208] NASA KSC, "Engine Processing Facility."
[1209] "KSC completes first full Shuttle main engine," *Spaceport News*, August 13, 2004, 8.
[1210] Jerry Cook, et al., "SSME Historical Recordation," presentation materials provided to Joan Deming and Trish Slovinac, June 12, 2009, MSFC.
[1211] "SSME Post flight to launch processing," June 12, 2009, in NASA MSFC, "STS Stack," Tab K, 19.
[1212] Rockwell International, Rocketdyne Division, "Space Shuttle Main Engine Turnaround Maintenance and Activities," Microfiche No. SHHDC-5576 (Huntsville, AL: MSFC History Office, March 3, 1982), 2.

Post-landing Safety Inspection

After the Shuttle landed, an initial safety inspection was carried out at the KSC SLF prior to towing to the OPF. Safing was limited to a visual inspection to verify that the engines were secure for transport. Inspectors looked at exposed portions of the engines to detect any damage from the flight or landing, and to determine if the engines appeared structurally sound and firmly secured to the orbiter structure.[1213] Bearing drying purges were also connected at this time.

Processing for Reuse

After safing operations, the orbiter was towed to an OPF High Bay for initial processing, which took approximately fourteen working days.[1214] Here, the SSMEs were removed from the vehicle. Engine removal entailed the de-pinning of the TVC actuators, the de-foaming of the interface, removal of the heat shields, disconnection of the interface joints, and installation of interface ground support equipment (GSE). The three engines were removed in the order of 2 (left), 3 (right), and 1 (center) [they were installed in the reverse order, 1-3-2], and subsequently transported to the SSMEPF.

At the SSMEPF, all scheduled and corrective engine maintenance was performed. Routine maintenance after each flight included automatic checkout (accomplished by the engine controller), external and internal inspections, and limited leak checks of critical components, such as seals and other elements that could compromise launch pad safety or vehicle operation. External inspection included the detection and evaluation of structural failures (cracks, broken brackets and clamps, deformation, loss of clearance); local erosion and overheating (combustion chamber and preburner bodies, hot gas manifold and hot gas ducts); and damage from non-engine causes. Internal inspections focused on the components that experienced the most extreme temperature, pressures, and speeds during engine operation. Borescopes allowed inspections to be conducted with minimum engine disassembly.[1215]

The workflow in the SSMEPF began with an initial pre-processing leak check of the nozzle tubes as well as the fuel, hot gas, and liquid oxygen internals. Then, after system drying, post-flight leak checks of the main combustion chamber liner and heat exchanger were carried out prior to disassembly and inspection. Line replacement units (LRUs) were removed, and the powerhead and turbopumps were inspected.[1216] Next, the LRUs were installed, and joints and electrical connections were secured. A retest and checkout followed the preparations for installation of the SSMEs. Overall, processing in the SSMEPF took about eighty days for the three-engine set.[1217]

[1213] Rockwell International, "Turnaround Maintenance," 2.
[1214] Cook, et al., "SSME Historical Recordation."
[1215] Rockwell International, "Turnaround Maintenance," 3-4.
[1216] LRU applies to engine parts that can be replaced in the turnaround area while the engine is installed in the vehicle. Rockwell International, "Turnaround Maintenance," 5.
[1217] Cook, et al., "SSME Historical Recordation."

The high-pressure turbopumps were removed after the first flight of a new engine for a more thorough inspection for debris. If the engine had flown previously, the turbopumps remained installed and were inspected using borescopes. In addition, the powerhead was inspected, and, as needed, repairs were made to the major components, including turbopumps, the main engine controller, nozzle, valves, actuators, and ducts. New or overhauled components were integrated into the flight engines. Leak checks, valve flow checks, and flight readiness tests were performed, and the nozzle TPS was installed.

Pratt & Whitney provided refurbishment for its high-pressure oxidizer and fuel turbopumps at each overhaul, scheduled after approximately ten flights. After refurbishment at the West Palm Beach facility, each turbopump was acceptance tested at SSC and then returned to service for an additional ten missions. Each turbopump was designed for a minimum service life of sixty missions.[1218]

Following the completion of work in the SSMEPF, the engines were returned to the OPF for installation into the orbiter and for pre-flight operations. (See Figure Nos. C-40 through C-46 for a pictorial representation showing the process of SSME installation into the orbiter.) These activities took approximately seven days. Work in the flow included the connection of interface joints, removal of GSE, turbopump torques, interface leak checks, connection of the TVC system, application of foam to the interfaces, installation of heat shields, and gimbal clearance checks.[1219] A final closeout inspection was made to detect any damage caused by maintenance activities. Engine nozzle covers were installed before transport to the VAB High Bay.

Launch

While the Shuttle was in the VAB, the SSMEs underwent one day of further leak checks, checkout, and rollout preparations. Pre-rollout activities included checkout of the orbiter/ET and orbiter/MLP interfaces, removal of the engine nozzle covers, and activation and deactivation of the trickle purge.

Following rollout and arrival at the launch pad, work included a helium signature test, ball seal leak checks, and main combustion chamber polishing. The helium fuel system purge was started at T-6.5 hours, and at T-6 hours the propellant bleed valves were opened to allow for thermal conditioning. At T-5 hours 50 minutes, the launch processing system initiated the SSME LH2 chill-down sequence in preparation for LH2 loading.

At T-4 minutes, the fuel system purge began. It was followed at T-3 minutes 25 seconds by the beginning of the engine gimbal tests. If all actuators functioned satisfactorily, the engines were gimbaled to a predefined position at T-2 minutes 15 seconds. The engines remained in this

[1218] Pratt & Whitney, "Shuttle Atlantis Flies With Three New P&W Fuel Turbopumps," press release, April 8, 2002, http://www.pw.utc.com.media_center/press _releases/2002/04_apr/4-8-2002_5712178.asp.
[1219] Cook, et al., "SSME Historical Recordation."

position until engine ignition. At approximately T-3 minutes, the ET LO2 tank was pressurized to 221 psi, and almost one minute later, the LH2 tank was pressurized to 42 psi. At T- 90 seconds, the engines were declared ready when all thermal and pressure conditions for engine start were met. At T-10 seconds, the hydrogen burn-off flares fired underneath the engine nozzles. They helped to burn off excess hydrogen gas that had accumulated near the engines. At T-9.5 seconds, the engine chill-down sequence was complete.[1220]

At approximately T-6 seconds, the engines were started, one at a time. The starting of the engines was staggered in 120 millisecond intervals to minimize shock loads.[1221] Between engine start and MECO, LH2 and LO2 flowed out of the ET through the disconnect valves, into the feedline manifolds, and then was distributed to the engines.

If all three SSMEs reached 90 percent of their rated thrust by T-3 seconds, then at T-0, the computers issued the commands to ignite the SRBs and to detonate the eight hold-down bolts so liftoff could occur. If one or more of the three main engines did not reach 90 percent of their rated thrust at T-3 seconds, all SSMEs were shut down. The SSME controller operated and controlled the engine, and the hydraulic actuators controlled the main propellant valves. An on-board computer automatically controlled the start-up of the engine; shutdown was commanded by the vehicle, usually when the specified velocity had been obtained.[1222]

Beginning at T-0, the SSME gimbal actuators were commanded to their null positions and then allowed to operate as needed for thrust vector control. About seven seconds after liftoff, the Shuttle was clear of the launch tower and traveling approximately 87 miles per hour. The SSMEs throttled down to reduce stress during the period of maximum dynamic pressure. At approximately 65 seconds mission elapsed time (MET), the engines were again throttled up to 104.5 percent RPL and remained at that setting for a normal mission until approximately 7 minutes 40 seconds MET, when the engines were throttled down to limit vehicle acceleration to no more than three times normal Earth gravity (3-g). About 6 seconds before MECO, the engines were throttled back to 67 percent in preparation for shutdown. After approximately 8 minutes 30 seconds MET, the engines were commanded to shut down.[1223]

After ET separation, approximately 1,700 pounds of propellant were still trapped in the SSMEs. This residual LO2 and LH2 made the orbiter tail-heavy and unstable, and therefore, was removed. Dumping of these propellants occurred simultaneously, beginning at MECO plus 2 minutes, 2 seconds. The LO2 trapped in the feedline manifolds was expelled under pressure from the helium subsystem through the SSME nozzles. The pressurized LO2 dump continued for ninety seconds. The LH2 was expelled overboard without pressure from the helium subsystem. It flowed through the fill and drain valves and the topping valve for two minutes. After the

---

[1220] USA, *Crew Operations*, 2.16-30.
[1221] Kirkman, "Space Shuttle Systems 101."
[1222] USA, *Crew Operations*, 2.16-30.
[1223] USA, *Crew Operations*, 2.16-31.

propellant dump was completed, the SSMEs were gimbaled to their entry stow position, with the engine nozzles moved inward (toward one another) to reduce aerodynamic heating. They remained in this position until the orbiter was towed back to the designated OPF High Bay after landing.[1224]

[1224] USA, *Crew Operations*, 2.16-33, 2.16-34.

PART IV. EXTERNAL TANK

Introduction

The external tank (ET) was the largest element of the STS and the only non-reusable major component. The complete ET structure measured approximately 154' in length, more than 30' longer than the orbiter. Since it was expendable, the ET was designed "to minimize active or moving parts."[1225] The ET contained and delivered approximately 1.6 million pounds of propellants (fuel and oxidizer) for the three SSMEs. The LO2 oxidizer was held in a forward tank, while the larger, rear tank contained the LH2 fuel. A structural connector called the intertank separated the two propellant tanks. In addition to serving as the shuttle's "fuel tank," the ET also was the backbone structure for attachment of the orbiter and SRBs. It accommodated the stresses created by both its own weight and that of the orbiter prior to launch, as well as the stresses generated by the SSMEs and SRBs during launch.

The ET was designed by the Martin Marietta Corporation, and manufactured and assembled by the Lockheed Martin Space Systems Company[1226] at NASA's government owned - contractor operated Michoud Assembly Facility (MAF) in New Orleans, Louisiana.[1227] The ET program was managed by the ET Project Office at MSFC. Lockheed Martin had approximately 2,000 subcontractors and suppliers located across the United States who provided materials for the ET. Historically, the suppliers included the Aluminum Company of America for SRB attachment fittings, ball forgings, longerons, forward ogive forgings and diagonal struts; both Reynolds Metals and Kaiser Industries Corporation for machined aluminum for LH2 tank barrel panels; Kaman Aerospace for slosh baffle segments; Aerochem for LO2 tank barrel panels; and Aircraft Hydroforming, Inc. for gore and ogive panels, as well as outer, inner and intermediate chords.[1228]

Historical Overview

Early Design Concepts

The tank design concepts developed in the late 1960s for the USAF Flight Dynamics Laboratory foreshadowed the Shuttle ET designs of the early 1970s. Both Lockheed and McDonnell Douglas submitted their early designs, prepared for the USAF, to NASA as part of the Phase A

[1225] Martin Marietta Corporation, *System Definition Handbook, Space Shuttle External Tank (Lightweight Model), Configuration & Operation Volume I*, (New Orleans, LA: Martin Marietta Corporation, August 1980), III-5, MSFC History Office, Huntsville.
[1226] In March 1995, the Martin Marietta Corporation and Lockheed Corporation merged to form the Lockheed Martin Corporation.
[1227] MAF was previously used for building the first stage of the Saturn IB and Saturn V rockets for the Apollo Program.
[1228] Edward H. Kolcum, "Space Shuttle Lightweight Tank Production Begins," *Aviation Week & Space Technology*, November 16, 1981: 135.

Space Shuttle competition.[1229] The Star Clipper vehicle concept developed by Lockheed included two 23.67'-diameter fuel tanks that formed a "vee" around the orbiter's nose. This represented the first major concept that moved part of the propellants (LH2 fuel) externally into expendable tanks.[1230] The Model 176, developed by McDonnell Douglas for the USAF study, used parallel fuel tanks with both LH2 fuel and LO2 oxidizer tanks located external to the orbiter. The two 150'-long x 24'-diameter fuel tanks were mounted on either side of the orbiter, and the 73'-long oxidizer tanks were attached on the orbiter's top and bottom.[1231]

NASA augmented the Phase B Space Shuttle study efforts in April 1971, with the addition of an analysis of an external hydrogen tank for the orbiter of a fully reusable shuttle.[1232] As a result, a new task was added to the existing McDonnell Douglas and North American Rockwell Phase B study contracts, as well as to the Lockheed Phase A Alternate Shuttle Concepts contract. A final report for the expendable LH2 tank prepared by each contractor was submitted between June 25 and June 30, 1971.[1233]

In May 1971, NASA had made the decision to put both the LO2 and LH2 tanks outside the orbiter airframe. "As with all shuttle components, cost was of primary importance in tank design."[1234] The intended consequence was to reduce total Shuttle development costs by half, and within the range considered supportable by Congress.[1235] An expendable ET allowed the orbiter to be smaller and lighter, and with less costly TPS materials.[1236]

The original design requirements for the ET were written by Rockwell International, NASA's orbiter and systems integration contractor. At this time, the program mission model called for 445 flights at the rate of sixty per year. According to Myron Pessin, former Chief Engineer for the External Tank Project at MSFC, the RFP developed by the ET Project Office, headed by James Odom, was based on the requirements prepared by Lockheed. Accordingly, "because of the high build rate envisioned, major attention was given to features to encourage low cost production approaches."[1237] Additionally, "ET design and processes had to be optimized for high rate production."[1238]

[1229] Jenkins, *Space Shuttle*, 68-69.
[1230] Jenkins, *Space Shuttle*, 68.
[1231] Jenkins, *Space Shuttle*, 69.
[1232] Whalen and McKinley, "Chronology," 11.
[1233] Whalen and McKinley, "Chronology," 13.
[1234] Dunar and Waring, *Power to Explore*, 292.
[1235] Dunar and Waring, *Power to Explore*, 283.
[1236] Jenkins, *Space Shuttle*, 140.
[1237] Myron A. Pessin, "Lessons Learned From Space Shuttle External Tank Development – A Technical History of the External Tank," (technical history, NASA MSFC, October 30, 2002), 2.
[1238] Myron A. Pessin, interview by Rebecca Wright, *NASA STS Recordation Oral History Project*, June 30, 2010, http://www.jsc.nasa.gov/history/oral_histories/STS-R/PessinMA/PessinMA_6-30-10.htm.

Contract Awards

The ET was the third major procurement for the STS, following the award of initial contracts for the orbiter and the SSME. Following a series of reviews and presentations for prospective contractors, held at MSFC on September 7, 1972, December 12, 1972, and March 6, 1973, the RFP for the DDT&E of the Shuttle ET was released to industry on April 2, 1973.[1239] This procurement included the manufacture of three ground test tanks (Structural Test Article, Propulsion Test Article, and Dynamic Test Article) and six developmental flight tanks (ET-1 through ET-6), with the last delivery in 1979.[1240]

Four companies were invited to bid: the McDonnell Douglas Astronautics Company of Huntington Beach, California; the Boeing Company of Seattle, Washington; the Chrysler Corporation Space Division of New Orleans, Louisiana; and Martin Marietta Aerospace, Denver Division.[1241] Because it had been selected by NASA as the prime orbiter contractor, Rockwell was prohibited from proposing on the ET contract. However, this firm teamed with Chrysler to provide a joint bid.[1242] In March 1973, appointments were made to the Space Shuttle ET Project Source Evaluation Board, which was co-chaired by Robert E. Lindstrom, Director of the Shuttle Office at MSFC, and James R. Odom, ET Project Manager.[1243] By the end of May, NASA received a proposal from each contractor team.

On August 16, 1973, NASA announced the selection of Martin Marietta for the ET DDT&E contract.[1244] A letter contract was executed on September 1, 1973. The period of performance for this initial contract (No. NAS8-30300), valued at roughly $40.5 million, ran through December 16, 1974. A letter contract extending the period of performance through January 31, 1975, with no increase in price, was approved by NASA Headquarters on November 25, 1974.[1245] By January 1975, NASA and the contractor "agreed on terms for a $156.565 million cost-plus-award-fee contract."[1246] Martin Marietta subcontracted the manufacture of the intertank aluminum panels to Avco Corporation's Aerostructures Division of Nashville, Tennessee. The $3.2 million contract between Martin Marietta and Avco was signed on June 11, 1975. Work was

---

[1239] Whalen and McKinley, "Chronology," 22-24; "Shuttle Tank Effort," *Marshall Star*, March 14, 1973, 2; "Space Shuttle External Tank Proposals Released," *Marshall Star*, April 4, 1973, 1, 4.
[1240] "Martin-Marietta to develop Space Shuttle Tank," NASA News Release No. 73-163, August 16, 1973, Folder: Space Shuttle-External Tank #1 1972-1973, MSFC History Office, Huntsville.
[1241] "NASA Asks Proposals for Shuttle ET," NASA News Release No. 73-64, April 2, 1973, Folder: Space Shuttle-External Tank #1 1972-1973, MSFC History Office, Huntsville.
[1242] Jenkins, *Space Shuttle*, 187.
[1243] James B. Odom, interview by Rebecca Wright, *NASA STS Recordation Oral History Project*, July 20, 2010, http://www.jsc.nasa.gov/history/oral_histories/STS-R/OdomJB/OdomJB_7-20-10.htm.
[1244] "Martin Marietta to develop Space Shuttle External Tank," *Marshall Star*, August 29, 1973, 2.
[1245] "Letter contract extension," no date, Programs/Projects: Space Shuttle, Drawer 23, Folder: Shuttle-External Tank August-December 1974, MSFC History Office, Huntsville.
[1246] Dunar and Waring, *Power to Explore*, 302.

slated to begin during the latter half of 1975 on ten intertank units, with delivery scheduled for late 1978.[1247]

At the time of RFP release, the shuttle systems requirements, including the orbiter tile design, had not been finalized. Later, as the systems requirements matured, design changes to the ET were needed, especially to the TPS materials and their locations.[1248] The Space Shuttle ET Project Requirement Review Board, chaired by Mr. Odom, met at MSFC in early February 1974, to define the program and technical requirements for subsequent design and development. All aspects of the STS hardware interfaces, ET subsystems, test and verification, and flight operations were addressed.[1249] A major discussion point at this time was the proposal to increase by 1,000 pounds the ET control weight of 75,000 pounds. In a note to Dr. William R. Lucas, Director of MSFC (1974-1986), Shuttle Program Manager Robert (Bob) Lindstrom reported that "The loads situation of Shuttle continues to be serious – our most recent ET loads will give us a few hundred pounds impact plus a cost and schedule penalty."[1250] Robert Thompson, Manager of the Space Shuttle Program Office at JSC (1970-1981), expressed concern for all shuttle element weights. As a result, the "Level II management reserve at MECO of 7,000 pounds" was established "to be used to implement new requirements or tradeoffs among element weight . . ."[1251] Reducing the weight of the ET to enable increased payload capacity was a continued concern throughout the SSP.

On August 28, 1974, NASA awarded a $26,453,600 contract to Martin Marietta for ET contract support through August 31, 1978. This four-year facilities contract provided for the acquisition of plant equipment at MAF, rehabilitation of existing facilities, and construction, modification, maintenance, and repair of facilities.[1252] This contract was amended on February 17, 1977, with the provision of approximately $3.7 million to fund construction of one new facility plus the addition of Cell D to the Vertical Assembly Building. The amended facilities contract also provided for the continuation of previously authorized facility work.[1253] According to James Odom, "the buying and the designing of the tooling was extremely crucial to the success of the program."[1254] He estimated NASA's original investment in specialized tooling at about $900 million.

[1247] "Nashville Firm Gets $32 Million Shuttle Contract," *Marshall Star*, June 18, 1975, 4.
[1248] Pessin, "Lessons Learned," 3.
[1249] "Shuttle ET Review Being Held Here," *Marshall Star*, January 30, 1974, 1, 2.
[1250] Bob Lindstrom to Dr. Lucas, December 23, 1974, Programs/Projects: Space Shuttle, Drawer 23, Folder: Shuttle-External Tank Aug-Dec 1974, MSFC History Office, Huntsville.
[1251] Robert F. Thompson to Manager, Shuttle Projects Office, MSFC, August 14, 1974, Programs/Projects: Space Shuttle, Drawer 23, Folder: Shuttle-External Tank Aug-Dec 1974, MSFC History Office, Huntsville.
[1252] "MSFC Awards Support Contract to Martin Marietta," NASA MSFC News Release No. 74-157, August 28, 1974, Programs/Projects: Space Shuttle, Drawer 23, Folder: Shuttle-External Tank Aug-Dec 1974, MSFC History Office, Huntsville; Whalen and McKinley, "Chronology," 30.
[1253] Whalen and McKinley, "Chronology," 46-47.
[1254] Odom, interview.

NASA's second major contract with Martin Marietta, valued at $230 million, was awarded in July 1980, for the beginning of full-scale flight tank production to support Shuttle operations. It covered delivery of seven ETs, and provided long lead time procurement for components and subassemblies for five additional tanks and raw material for nineteen more units.[1255] Effective to this contract, NASA's MSFC applied its amendment to the existing ET DDT&E contract with Martin Marietta to add more than $42.9 million to cover weight reduction redesign and development efforts and to modify tooling to be used in future production. The redesign was in accordance with NASA's plan to reduce the weight of the ET by 6,000 pounds to permit increased payload carrying capacity. Under this new contract, the first lightweight ET was expected to be delivered in the summer of 1982.[1256]

Production Buys 2 through 4 (Contract No. NAS8-33708) for fifty-four operational flight tanks and related launch site and flight support, covered the period between June 30, 1980 and June 3, 1991. The value at the end of this contract was $2,225.9 million. Production Buy 5 (Contract No. NAS8-36200) was for the manufacture, assembly, test, checkout, and delivery of thirty-five lightweight tanks plus twenty-five super lightweight tanks. The $3,773.0 million contract covered the period between November 2, 1984, and September 30, 2002. Production Buy 6 (Contract No. NAS8-00016, Schedule A), valued at $908.3 million, covered thirty-five flight tanks plus support for the period of September 27, 1999 through January 29, 2006. Following the *Columbia* accident, this contract was replaced by Schedule F, which called for the manufacture, assembly, test, checkout and delivery of nineteen tanks, between January 30, 2006, and September 30, 2010. The production portion of this contract was valued at $996.9 million.[1257] Cumulatively, Lockheed Martin's ET contract with NASA was valued at approximately $11 billion. Approximately 70 percent of the funds committed to the external tank went to subcontractors, most of whom supplied materials to Lockheed Martin.[1258]

ET Test Programs

In his technical history of the ET, Myron Pessin described five types of development test programs. These included materials testing, components testing, structural tests, dynamic tests, and propulsion tests. A summary of each follows.

[1255] "ET Production Contract Let," *Marshall Star*, July 2, 1980, 1; "NASA Awards Martin Marietta $230 Million Contract for Production of Shuttle External Tanks," NASA News, MSFC, Release No. 80-90, Programs/Projects: Space Shuttle, Drawer 23, Folder: ET 1979 and 19809, MSFC History Office, Huntsville.
[1256] "External Tank to be Lightened," *Marshall Star*, July 2, 1980, 1.
[1257] NASA MSFC, Transition Project Office, "STS Stack Recordation Data Package," June 15, 2009.
[1258] Dunar and Waring, *Power to Explore*, 303.

Materials and Components Tests

According to Pessin, the primary focus of the materials test program was the thermal protection materials, including foam insulation and ablators.[1259] Foams were tested under realistic flight conditions in wind tunnels at the USAF's Arnold Engineering Development Center in Tennessee, and ablators were tested in the plasma arc jets at Ames. Unique tests of spray-on foam insulation (SOFI) were conducted at Eglin Air Force Base in Florida. SOFI testing at Eglin made use of a 10'-diameter tank filled with liquid nitrogen and "subjected to various rain, wind, humidity and temperature conditions to determine the rate of ice growth."[1260] These data were later incorporated into a computer program used at KSC to predict whether ice would form during tanking or would exist prior to launch.

During 1976, MSFC engineers used an aluminum "mini-tank" to test the TPS for the LH2 tank. Thirteen tanks, each coated with SOFI, were tested to evaluate the ability of the insulation to withstand various types of stress during launch and flight. Acoustic environment tests exposed the insulation to sound levels averaging about 170 decibels. These tests were conducted to insure that the insulation would not be cracked by sound vibrations created by the SRBs and the SSMEs. The test series also included vacuum tests designed to detect any air pockets between the aluminum tank surface and the foam due to poor bonding. Such air pockets, in a space vacuum, could expand and result in rupturing of the insulation. A third type of mini-tank test examined three kinds of LH2 conditions: pressure, boil off, and hold. The pressure tests helped the NASA engineers determine if the insulation had enough elasticity to expand when the tank was filled and pressurized. Boil off tests, which measured the loss through evaporation, calculated the efficiency of the foam TPS. The objective of the hold tests was to determine the effects of a seven-hour idle period on the insulation system of a full LH2 tank. The knowledge gained during the mini-tank tests was used in the further development of a durable and efficient spray foam TPS for the ET's LH2 tanks.[1261]

Tests of individual ET components, such as attach fittings and slosh baffles, were performed at both MSFC and MAF. The largest component test was of the ET/orbiter complete aft interface structure, which was run at MAF. For this test, a load frame was built at MAF to simulate the loads from the orbiter.[1262]

Structural Tests

The structural qualification program, according to Odom, was designed "to really understand the capability of literally every square foot on the tank."[1263] The static structural tests were

[1259] Pessin, "Lessons Learned," 7.
[1260] Pessin, "Lessons Learned," 8.
[1261] "Shuttle External Tank Tests Being Conducted at Marshall," *Marshall Star*, August 4, 1976, 4.
[1262] Pessin, "Lessons Learned," 8.
[1263] Odom, interview.

performed to simulate the loads in the critical areas of prelaunch and flight. Four structural test articles, a LH2 tank, a LO2 tank, and two intertanks, were manufactured and assembled at MAF during 1977.[1264] The two flight-type intertanks differed in TPS materials and instrumentation. Intertank 1 lacked TPS materials, and its instrumentation configuration reflected the requirements for the two standard and one modal test. Intertank 2 featured TPS materials in the vicinity of the LH2 tank interface, and its instrumentation supported the requirements for one test only, the LH2 static test.[1265] A key element of the ET testing program, according to Odom, was that all the test articles were built on exactly the same tooling as the flight articles."[1266] Testing at MSFC was scheduled to verify the structural integrity of the ET components prior to the first static test firing of the shuttle's main propulsion system at SSC.[1267] The structural test program was conducted by MSFC's Test Lab, part of the Center's Science and Engineering Directorate. Three configurations were tested: the actual intertank with a LO2 tank simulator above and LH2 tank simulator below; the actual intertank and LO2 tank simulator; and the actual intertank and LH2 tank simulator.

The intertank structural test article was shipped from MAF by barge on February 25, 1977, and arrived at MSFC on March 11.[1268] Also transported were a LH2 tank simulator, a LO2 tank simulator, and a LO2 tank modal ring. The intertank and two tank simulators were used in the first series of structural tests, which were completed successfully in mid-November 1977.[1269] During the tests, loads as high as 4.35 million pounds were applied to the intertank test article to verify its capability to withstand the stress of Space Shuttle launch and powered flight. Forces were exerted to induce bending and twisting effects, as well as straight up-and-down loads.[1270]

The second phase of ET structural testing focused on the LO2 tank, attached to the intertank.[1271] Initially, the LO2 tank was tested with the tank empty, but under internal pressure. Next, testing was performed with the tank filled with barium sulfate ("driller's mud") and water to simulate the acceleration effects of the LO2 in flight. The tests simulated both liftoff and maximum acceleration conditions of flight. The final series in this test phase was conducted to verify the structural stability of the tank for LO2 loading during prelaunch operations.[1272]

[1264] "Shuttle ET Test Articles Near Completion at MAF," *Marshall Star*, July 6, 1977, 2.
[1265] Martin Marietta Corporation, *System Definition Handbook, Configuration and Operation, Space Shuttle External Tank* (Huntsville, AL: MSFC History Office, November 1975), XIII-8.
[1266] Odom, interview.
[1267] "Shuttle Structural Hardware Shipped to Marshall Center," NASA News, MSFC, Release No. 77-30, February 25, 1977, Programs/Projects: Space Shuttle, Drawer 23, Folder: ET 1977, MSFC History Office, Huntsville.
[1268] "ET Intertank Test Article To Arrive at MSFC March 11," *Marshall Star*, March 9, 1977, 1, 4.
[1269] "Major Tank Test Article Shipped," *Marshall Star*, March 2, 1977, 3; "ET Test Hardware Arrives," *Marshall Star*, March 16, 1977, 4; "1977 Was a Busy Year for Marshall," *Marshall Star*, December 21, 1977, 3; "External Tank Segment Successfully Tested," NASA News, MSFC, Release No. 77-212, November 11, 1977, Programs/Projects: Space Shuttle, Drawer 23, Folder: ET 1977, MSFC History Office, Huntsville.
[1270] "External Tank Structural Testing Begins at MSFC," *Marshall Star*, August 24, 1977, 1.
[1271] "Intertank Passes Tests," *Marshall Star*, November 16, 1977, 1.
[1272] "Structural Testing of Liquid Oxygen Tank Begins Here," *Marshall Star*, July 18, 1979, 1, 2.

During the next test phase, the LH2 tank, attached to the intertank, was loaded and taken to 140 percent of design limit loads for three different conditions (Figure No. D-1). Testing entailed filling the LH2 tank with nitrogen at 42 psi for fourteen hours and applying hydraulic loads as high as 600 tons at the SRB attach points.[1273] The tank was loaded with LH2, and the aft attach points were constrained as they would be by the SRMs. During this test, the tank buckled near the attach point and foam was debonded and shed. According to Pessin, this failure resulted from "cryoshrinkage" of the metal frame and dome.[1274]

A modal test performed on the LO2 tank closed out the structural test program (Figure No. D-2). According to Chuck Verschoore, former MSFC Test Laboratory lead for structural testing, the modal test evaluated the dynamic nature of the structure.[1275]

Main Propulsion Test Program

The Main Propulsion Test Program was critical in demonstrating the performance of the ET from a propulsion perspective. The first ET, designated as the Main Propulsion Test Article External Tank (MPTA-ET), was rolled out at MAF on September 9, 1977 (Figure No. D-3). It was a flight weight tank with flight type insulation. Following a brief ceremony, the ET was loaded on a barge and shipped to SSC (then, NSTL) for installation on the test stand and subsequent static test firing of the three main engines.[1276] The first static firing of the MPTA was on April 21, 1978. Previously at SSC, the first ET tanking test was conducted on December 1, 1977. The purpose of this test was to verify that the MPTA, as well as the test facility, could withstand the super-cold LH2 and LO2 used to fuel the SSME. In the test, the ET was filled with LH2 and LO2, and these propellants were flowed through the connecting piping to the three main engines. The test results validated that the engines could be cooled down to their operating temperature. Several days earlier, the ET had been filled with a 40 percent load of LO2 and vibrated to provide information on the natural frequencies of the MPTA.[1277]

According to Pessin, the MPTA program resulted in many important contributions. It proved the concept for delivery of propellant through a cross feed system; provided a mechanism to qualify the propellant delivery lines; developed the propellant loading software and procedures; demonstrated the location of the various loading sensors and the baffles necessary for their proper operation; and demonstrated that the anti-geysering line could be removed.[1278]

[1273] Whalen and McKinley, "Chronology," 49; "First Liquid Hydrogen Tank Completes Test," *Marshall Star*, May 11, 1977, 1.
[1274] Pessin, "Lessons Learned," 12.
[1275] Chuck Verschoore, Interview by Sarah McKinley, June 27, 1988, *Oral Interviews: Space Shuttle History Project Transcripts Collection, Report No. MHR-16*, NASA MSFC, December 1988.
[1276] "1st Shuttle ET Set For Rollout Sept. 9," *Marshall Star*, September 7, 1977, 1, 2.
[1277] "ET's Tanking Test at NSTL Is Successful," *Marshall Star*, January 11, 1978, 4.
[1278] Pessin, "Lessons Learned," 15.

The MPTA-ET was actually in the test stand at SSC for more than seven years, during which time it was used in many test firings, propellant loadings, and proof tests. Given the long period of exposure, the test article experienced massive corrosion problems, resulting, in part, from the use of a non-protecting primer. To maintain its usefulness, the test tank was stripped, cleaned, primed, and recovered with foam while in the test stand at least twice during the MPTA program.[1279] After cancellation of the program, the MPTA-ET was modified for display at the U.S. Space and Rocket Center in Huntsville, Alabama.

Ground Vibration Test Program

Following completion of the ALT program (See Part IA, Historical Context), the orbiter prototype *Enterprise* was flown to MSFC for a series of Ground Vibration Tests (GVT) to determine the structural integrity of the shuttle vehicle. The test program, initiated in May 1978, and completed in February 1979, simulated the period of flight just prior to SRB separation.[1280]

Three basic test configurations were used to match conditions during the various phases of an actual flight. The first phase of the test series, started in late May 1978, used the GVT-ET test article (Figure No. D-4) mated to the *Enterprise*. The LO2 tank contained deionized water and the LH2 tank was pressurized but empty. The combined orbiter-ET was suspended by a combination of air bags and cables on a truss structure attached to the top of the Structural Dynamic Test Facility (Building 4550) at MSFC. This configuration was used to simulate the high altitude portion of ascent after SRB separation.

During filling of the test article's LO2 tank with water, the forward dome "buckled." This "critical design weakness" was similar to the problem revealed during the structural tests.[1281] To solve this problem, pressure was applied to the tank during loading.[1282] Following the recommendation to resume testing using existing hardware, the Test Readiness Review Board gave permission on May 23, 1978.[1283]

In August 1978, following modifications to Building 4550, the second series of vibration tests added a set of SRBs containing inert propellant to simulate lift-off conditions. "This marked the first time that a complete set of dimensionally correct elements of the Space Shuttle had been assembled together."[1284] This phase of testing ended on December 2, 1978.

[1279] Pessin, "Lessons Learned," 14.
[1280] Dunar and Waring, *Power to Explore*, 314.
[1281] Pessin, "Lessons Learned," 13.
[1282] Odom, interview.
[1283] A.A. McCool, *Final Report on MVGVT Lox Tank Incident*, May 31, 1978, Programs/Projects: Space Shuttle, Drawer 23, Folder: ET 1978, MSFC History Office, Huntsville.
[1284] Jenkins, *Space Shuttle*, 213.

The third and final phase of testing, initiated in January and completed in late February 1979, used a configuration similar to the second series, except that the SRBs were empty. It simulated the configuration of the Shuttle just prior to the burnout and separation of the SRBs. As a result, among other findings, "new insight into the reaction of attach points between the tank and the boosters was gained."[1285]

Following the completion of the GVT program, in March 1979, the ET was transported by barge to KSC for use in fit checks at the VAB and for training personnel in stacking operations. Later, the GVT-ET was returned to MAF for evaluation and refurbishment.[1286] Plans to refurbish and recycle it into a production ET were never realized.

ET Evolutionary Development

Beginning in early 1975, NASA's MAF was made ready for manufacture of the ET. More than 300 special tools, including thirty-four major fixtures, were required to build and assemble the ETs, including fitting, trimming, welding, and the application of TPS materials. Roughly half of the special tooling was completed by October 1975, and expected to be ready in the spring of 1976.[1287] At roughly the same time that assembly of the first test tank was initiated, in late July 1976, over 1,298 tons of material for tooling and fixtures had arrived at MAF.[1288]

The ET was developed in three evolutionary stages. From the original Standard Weight Tank (SWT) to the third-generation Super Lightweight Tank (SLWT), the changes reflected successive efforts to increase Shuttle payload capacity, incident to the assembly of the ISS, by lightening the weight of the tank. In general, every pound reduced from the ET resulted in another pound that could be taken to orbit. ET weight reductions also enabled the Shuttle to go to a higher orbit.

The original SWT, manufactured until 1983, weighed approximately 76,000 pounds (Figure No. D-5). To provide more payload launch capacity, in 1980, MSFC began a two-year tank redesign program to trim 6,000 pounds from the weight of the original SWT.[1289] The Lightweight Tank (LWT), in production from 1981 through 1998, weighed roughly 10,000 pounds less, or about 66,000 pounds, while the SLWT, which debuted in 1998, weighed approximately 58,500 pounds. Following the *Columbia* accident in 2003, the SLWT underwent a series of additional improvements, including the incorporation of friction-stir welding to the manufacturing process.

[1285] "Vibration Tests Provide Valuable Data on Shuttle," *Marshall Star*, March 7, 1979, 1, 4.
[1286] "Test ET Leaves MSFC Enroute to Kennedy," *Marshall Star*, March 21, 1979, 1.
[1287] "Shuttle Tank Tooling-up Underway at New Orleans," *Marshall Star*, July 28, 1976, 1.
[1288] "Michoud Plant Nearing ET Production Capability," NASA News, MSFC, Release No. 76-60, August 6, 1976, Programs/Projects: Space Shuttle, Drawer 23, Folder: ET 1976, MSFC History Office, Huntsville; Whalen and McKinley, "Chronology," 42.
[1289] Dunar and Waring, *Power to Explore*, 320.

Standard Weight Tank

Fabrication of the first flight ET began in 1977, and during 1978, the first six flight ETs were in various stages of component fabrication, assembly, and acceptance testing. ET-1 moved to the checkout area at MAF for inspection, final painting over the SOFI, and acceptance reviews during the last week of June 1979.[1290] It was rolled out and delivered to NASA on June 29, 1979, then barged to KSC for flight on STS-1.[1291]

ET-1 through ET-6, used for development flight tests, contained additional DFI to confirm the ET design and to provide for diagnostic analysis in case of flight anomalies. The DFI was an independent system designed as an add-on to the operational instrumentation system. It was designed to "leave minimal scars upon its removal."[1292]

The SWT weighed 73,415 pounds empty, according to the contractor's 1975 *System Definition Handbook*.[1293] The basic structure of the original SWTs was made of aluminum alloy 2219; aluminum alloys 2024 and 7075 also were used. Tank sections, comprised of many thicknesses of aluminum sheeting, were assembled by gas tungsten arc welding.[1294] The second flight tank, ET-2, weighed about 200 pounds less than the first.[1295] ET-3 was the first tank which did not feature a coat of white latex paint. Originally added for atmospheric protection, elimination of the paint resulted in a 600 pound weight reduction.[1296] It also provided almost 600 pounds of extra shuttle payload carrying capacity, and saved about $15,000 in manufacturing costs.[1297] The first unpainted, rust-colored ET was launched on March 22, 1982, with STS-3. The anti-geysering line, used to circulate LO2 in the LO2 fill system, was found to be unnecessary and deleted on ET-4, resulting in weight and cost savings.[1298] The last of the total six SWTs was delivered to KSC on July 26, 1982. ET-6, flown on *Challenger's* STS-7 mission, was the last flight SWT used.

[1290] "ET-1 Moves to Final Checkout," *Marshall Star*, June 20, 1979, 4.
[1291] "First Flight ET Is Ready for Rollout," *Marshall Star*, June 27, 1979, 1; "MSFC's Elements For First Shuttle Delivered to KSC," *Marshall Star*, August 8, 1979, 1.
[1292] Martin Marietta, *Handbook, Configuration & Operation*, XII-2. Removal of the DFI coincided with the first LWT. Pessin, "Lessons Learned," 20.
[1293] Martin Marietta, *Handbook, Configuration & Operation*, I-3.
[1294] Carl R. Weymueller, "King-size fuel tank boosts spacemen into orbit," *Welding Design & Fabrication* (May 1979): 177-178.
[1295] Kolcum, "Lightweight Tank," 133.
[1296] The foam was susceptible to ultraviolet light, and started to deteriorate when on the pad. To avoid deterioration, the first two ETs were painted. Odom, interview.
[1297] NASA MSFC, *Shuttle Color Change*, NASA Fact Sheet (Huntsville, AL: George C. Marshall Space Flight Center, March 1980), MSFC History Office, Huntsville.
[1298] Pessin, "Lessons Learned," 16; "Assembly Now Underway To Lighten External Tank," *Marshall Star*, December 10, 1980, 2.

Lightweight Tank

Assembly of the first LWT, ET-8[1299] (Figure No. D-6), began in November 1980, with work on the aft dome of the LH2 tank. The tank arrived at KSC on September 8, 1982, and launched with STS-6 in April 1983. The eighty-fifth and final LWT was delivered to KSC on April 19, 1999, and flew on STS-99. The second generation ET (Figure No. D-7) weighed approximately 10,000 pounds less than the SWT.[1300] To accomplish the weight reduction, the thickness of many of the aluminum skin panels was reduced. Selected stringers in the LH2 tank were eliminated, and fewer ring stiffeners were used in the barrel assemblies. Major frames in the LH2 tank were modified, and the slosh baffle in the LO2 tank was redesigned, resulting in a 600 pound reduction.[1301] Dome caps, which were chemically milled on only one side, were now milled on both sides to reduce thickness and weight without reducing strength.[1302] Beginning with ET-8, the GH2 pressurization line was relocated and the cable trays were reduced in size. This change allowed for the elimination of ablator from a section of the tank.[1303] A titanium alloy which was stronger, lighter, and less expensive than the previous material, was used for the aft SRB attachments. Specifically, all 5A1-2.5 titanium alloy fittings were changed to 6A1-4V titanium alloy, and all 7075-T73 aluminum hardware was changed to 7050-T73 aluminum.[1304]

Like the SRBs, the original SWT contained a RSS capable of destroying the vehicle. The ET package consisted of linear-shaped charges on both the LO2 and LH2 tanks. Beginning with ET-80, the ET RSS was eliminated; the RSS was retained in the SRBs.[1305] Elimination also enabled removal of the high temperature ablator, MA25S, from the cable tray segments where the linear-shaped charges were located, thus resulting in a small weight savings to the ET.[1306] STS-78/ET-79 was the last to carry the ET RSS; STS-79/ET-82 was the first flight without it.

According to Pessin, in order to enhance operations, two modifications were made which increased the ET weight. Approximately 200 pounds were added to the LO2 tank "to permit the topping and replenish flows to take place," and over 400 pounds of aluminum were added to the LH2 tank aft domes in the form of circumferential ribs to stiffen the gores.[1307]

New welding techniques made LWT production more labor and cost efficient. Beginning in 1984, MSFC adopted Variable Polarity Plasma Arc welding. This method required less preweld

---

[1299] Martin Marietta did not assign the number ET-7 since the tank was never completed.
[1300] The weight savings from deleting the anti-geysering line and the white paint, both effected during SWT production, as well as the removal of DFI, were "booked" to the LWT reduction. Pessin, "Lessons Learned," 20.
[1301] Martin Marietta, "First Lightweight Propellant Tank to Fly on Shuttle Tomorrow," n.d., Sweetsir Collection, STS-6C, Folder 125, Kennedy Space Center Archives, Florida.
[1302] Kolcum, "Lightweight Tank," 133; Martin Marietta, "Propellant Tank."
[1303] Pessin, "Lessons Learned," 16.
[1304] Jenkins, *Space Shuttle*, 422.
[1305] Jenkins, *Space Shuttle*, 434.
[1306] Pessin, "Lessons Learned," 25.
[1307] Pessin, "Lessons Learned," 12, 20.

cleaning and edge preparation, and also minimized weld defects. Plasma Arc welding became the baseline process until the SLWT tools came along.[1308]

Super Lightweight Tank

The SLWT, introduced in 1998, weighed 7,500 pounds less than the previous LWT, and allowed the Space Shuttle to carry heavy components for assembly of the ISS (Figure No. D-8).[1309] The primary difference between the LWT and the SLWT was a change in material; no changes were made to the basic components. Aluminum alloy 2219 was replaced with aluminum-lithium (Al-Li) alloy 2195 in most of the major structures. This alloy was part of the Weldalite family developed and patented by Lockheed Martin Laboratories in Baltimore, Maryland. Al-Li alloy 2195 is composed of 1 percent lithium, 4 percent copper, 0.4 percent silver, 0.4 percent magnesium, and 94.2 percent aluminum. It is 30 percent stronger and 5 percent less dense than the original 2219 aluminum alloy.[1310] Pre-production laboratory tests showed that Al-Li alloy 2195 could be welded, and could withstand a temperature of minus 423 degrees F, the temperature at which LH2 is stored. Originally, Reynolds Metals in Chicago, Illinois, provided the Al-Li material for SLWT production. After the company was sold to Alcan, located in Ravenswood, West Virginia, Alcan became the supplier.[1311] While this aluminum-lithium alloy had superior qualities, NASA and Lockheed Martin engineers experienced many difficulties as they learned to form, weld and repair this new material.[1312] As Pessin noted, "we were starting a program with a squeezed schedule, one on which the whole reputation of NASA was riding, and we could not make the material and could not make the repairs in it."[1313] Weld repairs were a significant challenge for production of the SLWTs using the new Al-Li alloy 2195.

In the LH2 tank, the Al-Li 2195 replaced aluminum alloy 2219 in the dome cap and eleven of the twelve gore panels; the major ring frame outer chord at Station 1129;[1314] the barrel panels; the ring frames; and the forward dome gore panels. Material replacement in the LO2 tank included the aft dome cap and gore panels; the Station 852 outer chord; the forward and aft ogive gores; the barrel panels; and the Station 745 T-ring outer chord.[1315] The LH2 aft dome gore was left as 2219 aluminum "to eliminate the need to develop the weld processes in aluminum lithium.[1316]

[1308] Pessin, "Lessons Learned," 22; Dunar and Waring, *Power to Explore*, 321.
[1309] Lockheed Martin Corporation, "External Tank," 2010, http://www.lockheedmartin.com/ssc/michoud/ExternalTank/index.html; NASA MSFC, "Super Lightweight External Tank," April 2005, http://www.nasa.gov/centers/marshall/pdf/113020main_shuttle _lightweight.pdf.
[1310] Lockheed Martin, "External Tank;" NASA MSFC, "Super Lightweight External Tank."
[1311] Lockheed Martin Space Systems Company, "Space Shuttle Super Lightweight External Tank," July 2010, http://www.lockheedmartin.com/data/assets/9166.pdf.
[1312] Pessin, "Lessons Learned," 28-30.
[1313] Pessin, "Lessons Learned," 31.
[1314] See page 314 for a definition of "station."
[1315] R.S. Ryan, "A History of Aerospace Problems, Their Solutions, Their Lessons," NASA Technical Paper 3653 (Huntsville, AL: MSFC History Office, September 1996), 112, 114.
[1316] Pessin, "Lessons Learned," 36.

Many of the mechanically fastened materials in the intertank, skins, stringers, and doublers were changed to Alcoa's Al-Li 2090.

Compared with the LWT, membrane thickness in the SLWT was resized in the LH2 tank dome cap and eleven gores, as well as the LH2 aft dome cap, gore panels, and barrel panels.[1317] Many SLWT weld lands were increased in thickness by up to 0.35" to allow more margin for potential weld repairs. These robust weld lands included the longeron to barrel panel; barrel panel to barrel panel on Barrel No. 2 forward of the longerons; Frame 1623 and 1377 chord to chord aluminum 2195 welds; LH2 forward and aft dome gore to dome gore; LH2 forward and aft chord to gore; LH2 aft dome cap to dome body; and LH2 aft manhole and siphon plate.[1318]

In addition to the change in material, the SLWT's structural design was improved. The SLWT featured a new orthogonal waffle grid design (called an orthogrid) to improve strength and stability. The new design replaced the LH2 tank T-stiffeners, and provided almost half of the SLWT weight savings. Weight savings also were made by machining off the excess foam on the entire intertank, resulting in a reduction of approximately 270 pounds of foam. Additionally, the thickness of the foam applied to the LH2 barrel section was controlled, saving about 55 pounds on the SLWT. [1319] Seven Z frames were eliminated in the LH2 tank barrel panels, and one baffle tray was removed from the LO2 tank.[1320]

The first SLWT, ET-96, arrived at KSC in February 1998. It flew with *Discovery's* STS-91 mission, launched on June 2, 1998. ET-138, the last production SLWT, flew on STS-135 (July 8, 2011), the final mission of the SSP (Figure No. D-9).

Prior to the STS-91 mission, between February and September 1996, a special Aluminum Lithium Test Article (ALTA) was used in a series of SLWT certification and capability tests at MSFC. The test article consisted of a single ET barrel with a forward LH2 dome and an aft LO2 dome. It measured 40' long and 27' in diameter.[1321] Reynolds Metals Company cast the Al-Li 2195 ingots for the ALTA.[1322] To verify the structural integrity of the LH2 tank's new orthogonal waffle-like design and new aluminum lithium material, the test article was exposed to loads and pressures to simulate the conditions while at the pad, at liftoff, and when the SRBs separated from the shuttle. Following completion of the certification test series, the test article underwent a series of capability tests, including testing the article to the point of failure. While

---

[1317] Ryan, "Aerospace Problems," 112, 114.
[1318] Lockheed Martin, *Space Shuttle External Tank, System Definition Handbook SLWT, Layout Drawings Volume II* (New Orleans, LA: Lockheed Martin, December 1997), III-5, MSFC History Office, Huntsville.
[1319] Pessin, "Lessons Learned," 32, 36, 37.
[1320] Ryan, "Aerospace Problems," 112, 114.
[1321] Pessin, "Lessons Learned," 34; Ed Campion and June Malone, "Super Lightweight External Tank Certification Testing to Begin," February 1996, http://findarticles.com/p/articles/mi_pasa/is_199602/ai_901012153.
[1322] Martin Marietta Manned Space Systems, "Tank weld assembly team prepares for test schedule," *Mission Success Bulletin* (Huntsville, AL: MSFC History Office, August 23, 1994), 2.

not required to certify the tank for flight, these tests provided valuable data about the SLWT's structural capability.[1323]

A "second generation" of SLWTs used a lighter, stronger alloy (Al-Li 2297) in the intertank thrust panels, resulting in a significant weight savings. Following on this change, although adding weight back, all of the dome gores and ogive gores were converted back to 2219 aluminum, which was easier to weld, and which drastically reduced repairs.[1324]

The final enhancement to the SLWT was the introduction of friction stir welding. This process was selected by ET project managers because it produced stronger welds that were easier to make on the lighter-weight Al-Li 2195 alloy. Friction stir welding also had "significantly fewer process elements to control," compared with fusion welding, used in the manufacture of the earlier tanks.[1325] Additionally, the process variables were highly repeatable, and minimized the risk of weld defects.[1326] NASA and Lockheed Martin initially demonstrated the effectiveness of the friction stir welding process in 1998 using a 27.5'-diameter simulated LH2 tank with six barrel panels. Two subsequent special studies were completed between 1999 and 2001, and friction stir welding was implemented into production in 2001. Eight longitudinal weld joints on the LH2 barrel and four longitudinal welds on the LO2 barrel were welded using this process, totaling approximately 700' of weldments on each ET.[1327]

ET-132 was the first ET to fly (STS-132, launched on August 28, 2009) with a friction stir weld.[1328] It featured longitudinal friction stir welds on two of the LH2 tank barrels. ET-133, flown with *Atlantis* in November 2009, also featured friction stir welds on two barrels. ET-134, the 130th tank Lockheed Martin fabricated for the SSP, and which flew on *Endeavour's* STS-134 mission, was the first flight ET to feature longitudinal friction stir welds on all four LH2 tank barrels and the single LO2 tank barrel.[1329] ET-134 also featured lighter aluminum lithium material on the intertank thrust panels and on the LO2 tank aft ogive panels.[1330]

[1323] Michael Braukus and June Malone, "Shuttle Super Lightweight Fuel Tank Completes Test Series," July 1996, http://findarticles.com/p/articles/mi_pasa/is_199607/ai_238988282.
[1324] Pessin, "Lessons Learned," 37.
[1325] NASA MSFC, "Friction Stir Welding," 2001, http://www.nasa.gov/centers/ Marshall/ pdf/104835main_friction.pdf.
[1326] Jeff Ding, et al., "A Decade of Friction Stir Welding R&D At NASA's Marshall Space Flight Center and a Glance into the Future," NASA MSFC, no date, http://ntrs.nasa.gov/archive/nasa/casi.ntrs.nasa.gov/ 20080009619_2008009118.pdf.
[1327] Ding, et al., "Friction Stir Welding." Each ET has approximately one-half mile of total weldments.
[1328] Lockheed Martin, "Flight Info."
[1329] "External Tank Flies with Improved Welds." ET-134 also debuted improved intertank, thrust panels constructed of Al-Li 2297, a lighter material, which replaced AL-Li 2219, used on all previous intertanks.
[1330] Lockheed Martin, "Flight Info," 97. Aluminum 2219 was substituted with Aluminum 2297, which has lower density (7 percent) with similar mechanical properties. This change resulted in an approximate 226 pound reduction in structural weight. Chris Bergin, "STS-132 FRR approves May 14 launch date – External Tank Boost," May 5, 2010, http://www.nasaspaceflight.com/2010/05/sts-132-frr-approve-may-14-external-tank-boost/.

Thermal Protection System Changes

"Of all the changes other than the weight reduction – which is by design," James Odom stated, "the changes to the TPS was [sic] probably the most difficult and probably cost us the most money."[1331] Every time a component in a foam was changed, the foam needed to be recertified. Porter Bridwell, former ET Program Manager, agreed that the TPS materials represented a major change to the tank.[1332] Compliance with new federal environmental regulations was a key driver of change in NASA's use of ET TPS materials, particularly affecting the use of certain types of insulating foam.

On September 16, 1987, leaders from the U.S. and other world nations signed the "Montreal Protocol on Substances that Deplete the Ozone Layer." Under this international environmental treaty, Class I ozone-depleting compounds, such as chlorofluorocarbons (CFCs), were to be phased out of production by the end of 1995. The Environmental Protection Agency (EPA) set a date of January 1, 1996, for the total phase out of CFCs.[1333] CFC-11, a Freon-based blowing agent, was a major constituent in foams used for the ET, including those in the CPR, NCFI, BX, and PDL families.[1334] Production of this compound after 1995 was allowed only by special exemption, and with Montreal Protocol approval. After extensive testing, NASA's ET Project proposed to replace CFC-11 with the hydrochlorofluorocarbon (HCFC) HCFC-141b for applying the NCFI foams.[1335] At the same time, the EPA allowed NASA to continue use of stockpiled supplies of CFC-11 until HCFC-141b was certified for use on the Space Shuttle and phased in.

Provided with several years of advance notice, according to Pessin, NASA and Lockheed Martin worked to develop and qualify a second source for the sidewall foam. When this foam was reformulated with the HCFC-141b blowing agent, it was able to meet all known ET requirements.[1336] The new foam, NCFI 24-124 containing HCFC-141b, was certified for flight, and phased in over three tanks. It was first used on the LH2 tank aft dome of ET-82 which flew with STS-79 in 1996. In 1997, beginning with ET-88/STS-86, the HCFC-141b-containing foam was applied on the tank's acreage.[1337]

In 1999, the EPA expanded its ban on ozone-depleting substances. As a result, BX-250, a polyurethane foam containing CFC-11, was banned. NASA's request for an exception was

---

[1331] Odom, interview.
[1332] Porter Bridwell, interview by Jessie Whalen and Sarah McKinley, December 18, 1987, *Oral Interviews: Space Shuttle History Project Transcripts Collection*, NASA MSFC, December 1988, 37.
[1333] U.S. EPA, "Montreal Protocol on Substances that Deplete the Ozone Layer," no date, http://www.epa.gov/ozone/downloads/MP20_FactSheet.pdf.
[1334] CPR denotes Chemical Products Research (which was bought by Upjohn, which, in turn, was purchased by Dow); NCFI is the North Carolina Foam Industries; PDL denotes Product Development Laboratory.
[1335] The HCFCs were later targeted for phase-out by the EPA. U.S. EPA, "Montreal Protocol."
[1336] Pessin, "Lessons Learned," 26.
[1337] NASA MSFC, *External Tank Thermal Protection System*, NASA Facts, (Huntsville, AL: Marshall Space Flight Center, April 2005), http://www.nasa.gov/centers/marshall/pdf/114022main_TPS_FS.pdf.

granted by the EPA, and subsequently, NASA developed BX-265 foam, applied with HCFC-141b, as a replacement. In December 2001, BX-265 first flew as a replacement of BX-250. However, tanks already insulated with BX-250 continued to be flown as BX-265 was implemented through the manufacturing process.[1338]

Post-Columbia Modifications to the ET

Historical Background

On January 22 and 24, 1981, the LH2 and LO2 tanks of ET-1 were loaded with 1.6 million pounds of propellants in preparation for STS-1. A few days later, *The Huntsville Times* reported that engineers at KSC were inspecting damaged foam insulation on *Columbia's* ET. Two sections of foam insulation had come loose in the area of the bipod that attached the orbiter's nose to the tank. The cause was believed to be related to the slight shrinkage of the aluminum tank as the supercold LH2 and LO2 were loaded.[1339] Repairs began on March 8, and *Columbia* was launched on April 12, 1981, marking the beginning of the Space Shuttle flight program.[1340] While the STS-1 mission was a success, about 300 orbiter tiles needed replacement due to damage from ET foam impacts.

The foam "liberation" on the Shuttle's first flight ET foreshadowed the events ahead, culminating with the *Columbia* accident, when foam debris struck the orbiter's wing leading edge, resulting in the loss of the STS-107 shuttle crew and vehicle. As underscored in the report of the CAIB, "the shedding of External Tank foam – the physical cause of the Columbia accident – had a long history. Damage caused by debris has occurred on every Space Shuttle flight, and most missions have had insulating foam shed during ascent."[1341] The CAIB report also noted that of the seventy-nine missions for which photographic imagery was available, there was evidence of foam shedding for sixty-five of the missions.[1342]

In the aftermath of the tragedy, the CAIB recommended that NASA initiate an aggressive program to eliminate all ET TPS debris-shedding at the source (Figure No. D-10). In response, NASA developed and implemented a three-phase approach. Phase 1, implemented prior to RTF, focused on already built tanks. Tests and analyses were conducted to understand the root causes of foam shedding. As a result, structural changes were made to the LH2 tank ice/frost ramps; the LO2 feedline brackets; the forward ET/orbiter attach fitting, called the bipod; and the LO2 tank feedline bellows.

[1338] NASA MSFC, *Thermal Protection System*.
[1339] Whalen and McKinley, "Chronology," 79.
[1340] Whalen and McKinley, "Chronology," 81.
[1341] CAIB, *Report, Volume I*, 121.
[1342] CAIB, *Report, Volume I*, 122.

In addition to these modifications, enhanced process controls were implemented to improve safety and to reduce instances of liberated foam. These included test panels, video review of spray applications, increased inspections, and more refined engineering requirements. Beginning with the first RTF mission, STS-114, an enhanced finishing procedure was implemented to improve foam application to the stringers, or intertank ribbing, and to the upper and lower area of the LH2 intertank flange.[1343]

Phase 2 efforts, not considered mandatory for RTF, focused on continuous improvement, such as practical debris elimination enhancements that could be incorporated into production. Phase 3 encompassed long-term development activities that would eliminate TPS foam on the vehicle. The Phase 3 changes were never implemented, due to the retirement of the SSP.[1344]

NASA conducted two RTF missions to validate the effectiveness of the changes made to meet the recommendations of the CAIB: STS-114/ET-121 in July 2005, and STS-121/ET-119 in July 2006. ET-120 was the first tank to be modified with new safety improvements mandated by the CAIB. It shipped from MAF on December 31, 2004, and was scheduled to fly with *Discovery* on the first RTF mission, STS-114, originally set to launch on May 22, 2005.[1345] However, when the results of a tanking test indicated ice build up on the LO2 feedline bellows, a problem that could not be addressed on the pad, *Discovery* was returned to the VAB where ET-120 was swapped out with ET-121. On July 26, 2005, at 127 seconds into the flight, a piece of foam, measuring about 36" long and 11" wide, detached from the tank. The location of the foam loss was approximately 15' below the flange that joined the intertank to the LH2 tank, or about 20' from the top of the LH2 Protuberance Air Load (PAL) ramp. Thus, despite significant modifications to reduce the possibility of foam loss, STS-114 experienced foam liberation during ascent; the foam did not impact the orbiter.

After STS-114, in October 2005, NASA shipped both ET-119 and ET-120 back to MAF for destructive evaluation and non-destructive evaluation (NDE) to determine the most probable cause of the foam losses, and "to redesign, test, and eliminate those causes."[1346] Subsequently, in October 2005, ET-120 was used as a dissection test article during an investigation at MAF to better understand the foam loss on the PAL and ice/frost ramps during the STS-114 mission.[1347] Dissections revealed TPS cracking at the LH2 PAL ramp and LH2 ice/frost ramp locations of ET-120. Unlike ET-120, which had been through two tanking and thermal cycles, ET-119, which

---

[1343] NASA MSFC, *Space Shuttle External Tank ET-128, STS-124*, NASA Facts, (Huntsville, AL: George C. Marshall Space Flight Center, 2008), http://www.nasa.gov/centers/marshall/pdf/228641main_8-368946_%282%29.pdf.
[1344] NASA, *NASA's Implementation Plan*, 1-4.
[1345] NASA, *STS-120, Harmony: A Global Gateway* (Washington, DC: NASA, October 2007), 68, http://www.nasa.gov/pdf/ 192725main_STS-120_Shuttle_Press_Kit.pdf.
[1346] NASA, *Implementation Plan*, xiii.
[1347] Following its use in the foam loss investigation, ET-120 was repaired to return it to flight status. Repair work began in October 2006, and ET-120 supported the launch on need effort for *Endeavour's* STS-118 mission, launched in August 2007. Later, ET-120 flew with *Discovery*'s STS-120 mission, launched on October 23, 2007.

had not been through these cycles, did not have cracks in the LH2 tank's PAL ramp foam. The cracks most likely occurred during thermal cycling, it was concluded, "and similar cracks were the most likely cause of the foam loss on STS-114/ET-121.[1348]

PAL ramps (Figure No. D-11) were manually sprayed wedge-shaped layers of foam. Originally, they were designed as a safety precaution to protect the pressurization lines and cable tray along the side of the ET from airflow during ascent. Prior to their elimination, each ET had two PAL ramps. One was located near the aft end of the LO2 tank, just above the intertank, and the other was below the intertank, along the upper end of the LH2 tank. Both ramps extended about 5' into the intertank area. The LO2 PAL ramp was 13.7' long and the LH2 PAL ramp was 36.6' long. Prior to STS-114, PAL ramp foam loss had been observed on STS-4/ET-4 and STS-7/ET-6. The likely causes of these losses were believed to be repairs and cryo-pumping (air ingestion) into the ablator panels under and adjacent to the PAL ramps.[1349]

Following nearly three years of studies and testing, NASA determined that eliminating the PAL ramps was the best means of reducing the risk of foam debris. Removal of the PAL ramps reduced the weight of the ET foam by about 37 pounds.[1350] ET-119, flown on the second RTF mission, STS-121, which launched on July 4, 2006, was the first to fly without PAL ramps.[1351] The tank featured small, foam ice/frost ramp extensions, which had been added to the ice/frost ramp locations where the PAL ramps were removed. A total of nine extensions were added, six on the LH2 tank and three on the LO2 tank. Each weighed 0.10 pounds.[1352] This mission demonstrated that removal of the PAL ramp was successful in reducing the debris risk. As a result, the PAL ramps were removed from all future tanks. ET-128, launched with STS-124 on May 31, 2008, was the first tank to fly with all RTF improvements incorporated during production instead of being added after manufacturing was complete.[1353]

Description of Structural Changes

Beginning with RTF, several elements of the ET were the focus of redesign and structural modifications which generally aimed at mitigating foam loss. These key areas included the ice/frost ramps, the LO2 feedline brackets, the LO2 feedline bellows, the LH2 tank/intertank flange region, the forward bipod fitting, and the +Z aerovent. In addition to these changes, a new observation camera system was implemented, in accordance with the CAIB recommendations. A summary of these modifications follows.

[1348] NASA, *Implementation Plan*, 1-4.
[1349] NASA, *Implementation Plan*, 1-2.
[1350] NASA MSFC, *Return to Flight External Tank, ET-119*, NASA Facts, (Huntsville, AL: George C. Marshall Space Flight Center, June 2005), http://www.nasa.gov/centers/marshall/pdf/150034main_Shuttle_ET-119_FS.pdf.
[1351] Lockheed Martin, "Flight Info," 89; NASA MSFC, *ET-119*; NASA, *STS-120*, 68.
[1352] NASA MSFC, *Preparing the External Tank, ET-118*, NASA Facts (Huntsville, AL: George C. Marshall Space Flight Center, August 2006), http://www.nasa.gov/centers/marshall/pdf/155290main_shuttle_et118_fs.pdf.
[1353] NASA MSFC, *Tank ET-128*.

Ice/Frost Ramps: The ET main propulsion system pressurization lines and cable trays were attached along the length of the tank at several locations by metal support brackets. These brackets were protected against ice and frost formation during tanking operations by thirty-six foam protuberances called ice/frost ramps (Figure No. D-12). Twelve of these ramps were located on the LO2 tank, seven on the intertank, and seventeen on the LH2 tank. The size and design of the ramps depended on location. The ramps on the LO2 tank were approximately 1.5' long by 1.5' wide by 5" high and weighed about 12 ounces. The ramps on the LH2 tank were larger, measuring approximately 2' long by 2' wide by 1' high, with a weight of 1.7 pounds each.

Beginning with modifications to ET-120, changes to the LH2 tank ice/frost ramps were made at fourteen locations. Also, changes were made at four locations on the LO2 tank ice/frost ramps. After analyses revealed cracked base foam in the ice/frost ramps of ET-120, NASA approved a complete ramp redesign to reduce the probability of ice/frost formation and possible debris.[1354] ET-128, which flew on *Discovery's* STS-124 mission, debuted the redesigned ice/frost ramps on the LH2 tank. The redesign changes were incorporated into all seventeen ice/frost ramps on the LH2 tank. Specific changes included the replacement of PDL and NCFI foam in the ramps' base cutout by BX hand-spraying to reduce bonding and cracking.[1355] This replacement foam material also was applied in bracket pockets to reduce voids. Pressurization line and cable tray bracket feet corners were rounded to reduce stresses, and shear pin holes were sealed to reduce leak paths. Also, isolators were primed to promote adhesion, and isolator corners were rounded to help reduce foam stresses.[1356]

Liquid Oxygen Feedline Brackets: The 70' long by 17"-diameter LO2 feedline carried LO2 oxidizer to the orbiter, where it was distributed to the SSMEs. The feedline was attached to the ET with five brackets. The brackets allowed for movement of the feedline during fueling on the pad, during detanking in flight, and to compensate for thermal expansion and contraction. The original brackets, manufactured from aluminum, were primed, then covered with ablator, over which a 1"-thick layer of BX-250 foam was sprayed on. An interim modification was made to the foam configuration of ET-120's LO2 feedline brackets. The BX foam insulation and ablator were removed from the upper portion of four brackets. The foam insulation was later reapplied without the Super Light Ablator (SLA). Elimination of the SLA reduced the TPS mass for each bracket by about 0.12 pounds.[1357]

Beginning with ET-128/STS-124, new titanium brackets replaced aluminum brackets at four locations to minimize ice formation in under-insulated areas. Titanium is seventeen times less

---

[1354] NASA, *STS-120*, 69; Lockheed Martin, "Flight Info," 89.
[1355] PDL is the acronym for Product Development Laboratory, the original supplier of ET foam. This hand-poured foam was used for filling odd-shaped cavities. NCFI is the acronym for North Carolina Foam Insulation. This foam was used on the bottom (aft dome) of the liquid hydrogen tank. NASA MSFC, *Tank ET-128*.
[1356] NASA MSFC, *Tank ET-128*.
[1357] NASA, *ET-120*.

thermally conductive than aluminum, and therefore, does not conduct cold or heat as well. Thus, the tank required less TPS material, and the amount of foam required for insulation on the ET could be reduced. In addition, Teflon material was applied to the upper outboard monoball attachment to eliminate ice adhesion, and additional foam was added to the feedline to minimize cold spots and reduce ice.[1358] Along with the modification to the LH2 tank ice/frost ramps, the redesign of the foam in the area of the LO2 feedline brackets greatly reduced the potential for liberated foam during the initial phase of launch. Post-flight analysis indicated no observed foam loss from either the feedline brackets or the ramps of ET-128. All subsequent tanks incorporated this redesign.

Liquid Hydrogen Tank/Intertank Flange Area: Flanges located at the bottom and top of the intertank provided attachments for the LH2 tank and the LO2 tank, respectively. After the tanks were joined, the flange regions were insulated with foam. ET separation imagery had shown repeated losses of the foam overlying the LH2 tank/intertank flange. Analyses indicated that "when the GN2 [gaseous nitrogen] used as a safety purge in the intertank came into contact with the extremely cold hydrogen tank dome, the GN2 condensed into LN2 [liquid nitrogen]."[1359] The LN2 seeped into the intertank joints, fasteners, vent paths, and other penetrations into the foam, filling voids in the foam. During ascent, the LN2 returned to a gaseous state, pressurized the voids, and caused the foam to detach.

A simplified, enhanced close-out, or finishing, process was implemented to reduce the risk potential for TPS debris from the flange region. Assessments of the tank had indicated that voids, or spaces, sometimes developed in the foam sprayed on the flange. To reduce the number of voids, the new procedure entailed an improved foam application to the intertank ribbing (stringer area), and to the upper and lower area of the flanges. The enhanced process also included real-time surveillance to detect any imperfections so they could be repaired immediately. A related improvement was the reversal of the flange bolts that connected the LH2 tank and intertank, such that the nut ends were enclosed by the intertank's stringers. The stringers were then filled using a new mold-injection procedure. In addition, the spraying process on the intertank's thrust panel was changed to assure a smooth spray, and a sealant was added to the threads on the flange bolts to reduce the risk for foam debris.[1360]

Forward Bipod Fitting: Each ET had two bipod fittings, made from titanium, which connected the tank to the orbiter through two forward attachment struts. The fittings were coated with ablator, over which foam was sprayed and allowed to dry. The foam was then shaved into a ramp shape. Historically, the shape of the bipod ramp changed over time. ET-1 through ET-13

[1358] NASA MSFC, *Tank ET-128*.
[1359] CAIB, *Report, Volume I*, 1-10.
[1360] NASA MSFC, *External Tank Liquid Hydrogen Tank/Intertank Flange*, NASA Facts (Huntsville, AL: Marshall Space Flight Center, April 2005), http://www.nasa.gov/centers/marshall/pdf/113323main_Flange_Fact_Fact_Sheet.pdf.

featured ramps with a 45 degree angle. Beginning with ET-14, the ramp angle was changed to between 22 and 30 degrees, and a slight modification was implemented on ET-76 and later tanks.

NASA began developing redesign concepts after foam came off the left bipod ramp area during the October 2002, launch of *Atlantis* on the STS-112 mission. A similar loss during *Columbia's* STS-107 mission in January 2003 prompted the agency to redesign the bipod ramp during RTF efforts.[1361] The old design used wedge-shaped foam ramps to prevent ice from building up on the fitting (Figure No. D-13). Each ramp measured approximately 30" long, 14" wide, and 30" high. The ramps were applied by hand spraying BX-250/265 foam over the bipod fittings during the final stages of the tank's preparation, and then finished by hand carving the foam to the required dimensions. Analysis during the STS-107 investigation indicated that hand spraying was prone to produce internal voids and defects in the foam; it was shown that such voids and defects contributed to foam loss during ascent.[1362]

While the fittings proper were not changed, the redesign removed the insulating foam ramps (Figure No. D-14). To prevent the formation of ice build up from the subzero (cryogenic) LH2 fuel, the new design added four rod heaters below each forward bipod fitting in a new copper plate to reduce heat loss.[1363] The cartridge-type heaters were 0.25" in diameter and 5" in length. Each could produce up to 300 watts of power when operated at 120 volts ac. Designed to function only during pre-launch, the heaters were powered and monitored through connections in the ground umbilical carrier plate. Related modifications to the original bipod fittings included the elimination of the bipod spindle heater elements, and the addition of a smaller end cover made from Inconel 718 to withstand higher temperatures. The new bipod design also required additional cabling to operate the heating system. It included eight circuits, four for each bipod. The circuits ran from the external tank ground umbilical carrier plate to the heaters which were under the bipod fittings.[1364]

Imagery from STS-114 documented a missing piece of foam near the tank's left hand bipod attachment fitting. Subsequent analyses indicated the probable cause was "cryoingestion," whereby increased pressure of gases under the foam may have resulted in the liberation of foam. The leak path for the gas could have been through the heater or temperature sensor wiring harness. Voids found in the material used to bond the wire harnesses to the substrate were identified as another potential contributor to the problem. To correct these problems, electrical harnesses that serviced the bipod heaters and temperature sensors were removed and replaced with improved versions. Void spaces beneath the cables were eliminated by using an improved bonding procedure.[1365]

[1361] Earlier, bipod foam losses were observed on STS-7 (1983), STS-32 (1990), STS-50 (1992), STS-52 (1992), and STS-62 (1994). CAIB, *Report, Volume I*, 1-83.
[1362] NASA MSFC, *External Tank Forward Bipod Fitting*, NASA Facts (Huntsville, AL: Marshall Space Flight Center, April 2005), http://www.nasa.gov/centers/marshall/pdf/114020main_ET_Bipod_FS.pdf.
[1363] NASA MSFC, *Bipod Fitting*; NASA MSFC, *Tank ET-128*.
[1364] NASA MSFC, *Bipod Fitting*; NASA MSFC, Tank, *ET-119*.
[1365] NASA MSFC, *Tank, ET-119*.

Liquid Oxygen Feedline Bellows: The ET featured five LO2 feedline bellows, which were part of the LO2 feedline assembly. Two of the bellows were located inside the intertank. The other three were located at joints along the feedline on the outside of the LH2 tank, with two near the aft end and one near the top. These accommodated thermal expansion and contraction, allowing the feedline to move or flex. Only the bellows located near the top of the LH2 tank, near the LO2 feedline fairing, was viewed as a significant debris concern (Figure No. D-15). The bellows were protected by a rain shield covered with BX-265 foam. However, because they were designed for movement, the bellows proper, unlike the rain shield, were not covered with insulating foam. As a result, ice and frost could form, presenting a potential source of debris. To reduce the formation of ice, the foam on the bellows' cover was reshaped to include a "drip lip" that allowed moisture to run off. The original configuration of the thermal protection on the bellows was angled, which allowed condensate to contact the feedline rain shield and freeze.[1366]

In addition to the new drip lip configuration, a 0.5"-wide, copper-nickle alloy strip heater was added to the topmost bellows located near the LO2 feedline fairing to further reduce the amount of ice and frost formed prior to launch. The heater was installed in the bellows cavity, and bonded to the bellows rain shield and convolute shield. Heater wire was routed under the foam to the LO2 feedline fairing penetration in the intertank.[1367] The heater was added after new information from debris studies showed that ice forming on the bellows posed a significant debris concern.

Observation Camera System: Among the recommendations made by the CAIB was that NASA provide a capability to obtain and downlink high resolution images of the ET after it separated from the orbiter vehicle. Prior to RTF, the Space Shuttle had two on-board high-resolution cameras that photographed the ET after separation. However, the images were not downlinked to the Mission Control during the mission. As a result, no real-time imaging of the ET was available to check for potential debris.[1368]

Beginning with STS-114, the Space Shuttle was newly equipped with three video cameras which provided views of the orbiter's underside and the ET prior to tank separation. One camera was located on the ET and the other two were installed, one each, on the two SRBs. The ET camera was mounted inside the LO2 feedline fairing, a metal covering that protected the area where the fuel feedline penetrated the intertank. The video camera, a Sony XC-999, was the same type that flew on STS-112/ET-115 in October 2002.[1369] The ET-mounted camera provided a field of view of about 100 degrees, and included the vicinity of the bipod attachment area and a portion of the bottom side of the orbiter. The camera's battery pack and transmitter were contained in an

---

[1366] NASA MSFC, *External Tank Liquid Oxygen Feedline Bellows*, NASA Facts (Huntsville, AL: Marshall Space Flight Center, May 2005), http://www.nasa.gov/centers/marshall/pdf/119015main_revLOX_FS.pdf.
[1367] CAIB, *Report*, *Volume I*, 1-10.
[1368] NASA, *NASA's Implementation Plan*, 1-59.
[1369] The camera flown on STS-112/ET-115 was the first to provide "live shots." The camera specifications were developed by Lockheed Martin, who also integrated the camera into the tank system and developed the camera housing.

electronics box mounted on top of the SRB crossbeam inside the ET. The camera also had two S-band antennas located on the opposite side of the tank from the orbiter. The complete camera system weighed thirty-two pounds. The camera system was activated about three minutes prior to launch, and operated for fifteen minutes following liftoff. The video was downlinked during flight to several NASA data receiving sites. Lockheed Martin Space Systems developed the camera specifications and camera housing, and integrated the camera into the ET system.[1370]

+Z Aerovent: The final post-*Columbia* modification, which debuted with ET-135/STS-131, was the removal of foam-over-foam around the +Z aerovent near the forward flange of the intertank. This change was implemented to reduce the potential for crack formation. The successful first flight of the +Z aerovent TPS redesign underscored the lessons learned from on-going investigations of foam loss events. Contamination on the intertank structure, prior to the application of foam, it had been observed, resulted in bond adhesion failures, which caused foam shedding during ascent. In response, changes in production procedures were implemented at MAF, which resulted in more effective substrate cleaning and TPS application on the intertank.[1371]

Other Challenges: Return to Flight to Final Mission

ET foam debris shedding continued throughout the SSP, but diminished in frequency as the result of the redesign efforts. Reportedly, the last few flights were the "cleanest." Other problems related to the ET challenged NASA up until the near close of the SSP. These included continued difficulties with the LH2 engine cutoff (ECO) sensors, as well as stringer cracks in the intertank.

LH2 ECO Sensors

Four ECO sensors were mounted on a single carrier plate approximately 4' from the bottom of the LH2 tank (Figure No. D-16). Designed to activate in an emergency situation, they indicated when the ET was about to run out of propellant. In preparation for the STS-114 RTF mission, a tanking test on ET-120 resulted in an ECO sensor anomaly. The sensors indicated "wet" when there was no propellant in the tank. Because of another problem that could not be fixed at the pad, *Discovery* was rolled back to the VAB and the orbiter was mated to another stack, originally intended for the next mission, STS-121. *Discovery* was returned to the launch pad with its new stack about one month before the targeted launch. During pre-launch check-outs on the day of launch, the LH2 ECO sensor on the new tank falsely indicated "wet," resulting in a launch scrub. As a result, NASA conducted a more thorough investigation of the anomaly. *Discovery* eventually launched successfully on July 26, 2005, and no false indicators were received from the LH2 ECO sensors.

[1370] NASA MSFC, *Space Shuttle External Tank and Solid Rocket Booster Camera Systems*, NASA Facts (Huntsville, AL: Marshall Space Flight Center, April 2005), http://www.nasa.gov/centers/marshall/pdf/114016main_ET_SRB_Cam_FS.pdf.
[1371] Chris Bergin, "STS-132 FRR."

In December 2007, another issue with the ECO sensors was indicated during tanking, preventing the launch of STS-122/ET-125. That month, while the ET remained at the launch pad, components of ET-125's ECO sensor system feed-through assembly were taken to MSFC and subjected to failure analysis. ECO sensor system modifications were designed, tested, certified and retrofitted to ET-125 between December 2007, and February 2008. STS-122 launched on February 7, 2008; the ECO sensor LH2 feed-through connector on the LH2 tank of ET-125 was modified on the launch pad.[1372] According to Anthony Bartolone, Lead Project Engineer, ET and SRB Processing at KSC, ultimately, the cause of the problem was determined to be contamination in a connector that went through the wall of the hydrogen tank.[1373] The connector, a set of pins embedded in glass, was not functioning properly due to contamination by the lubricant used to install the connector. Specifically, the contaminant prevented the electrical connection to go through the wall of the external tank, which was being interpreted as a loss of the signal or failure of the sensors. To resolve the problem, the connector was removed from subsequent ETs. The pins were welded or soldered to their sockets to prevent contamination from creating an open circuit. From that point on, there were no more problems with the ECO sensors.

Intertank Stringer Cracks

A hydrogen vent line leak discovered during fueling for *Discovery's* final mission (STS-133/ET-137) in November 2010 resulted in a launch scrub.[1374] During the final inspection (from camera views) of the detanking and draining process, small cracks were found in two of the stringers in the wall of the ET's intertank. Exhaustive tests and analyses at both MSFC and MAF followed to understand the root cause. Engineers concluded that the cracks were caused by temperature-induced stress near the tops of the stringers as the LO2 tank, exposed to minus 297 degree F propellant, contracted during fuel loading. This contraction pulled the tops of the stringers away from the bottom of the LO2 tank. Although the tank was designed to accommodate such a contraction, the metallurgy of the tank came into question. The problem was traced to the stringer material, 2090 aluminum, manufactured by Alcoa, which lacked sufficient fracture toughness. The alloy was discovered to be from a lot which was more brittle than usual, and more susceptible to fractures. To resolve the problem, a "radius block modification" was made.[1375] Structural doublers were riveted in place over 105 of the 108 rib-like stringers to

[1372] NASA MSFC, *Tank ET-128*.
[1373] Anthony P. Bartolone, interview by Jennifer Ross-Nazzal, *NASA STS Recordation Oral History Project*, July 5, 2011, http://www.jsc.nasa.gov/history/oral_histories/STS-R/BartoloneAP/BartoloneAP_7-5-11.htm.
[1374] This was the third recurrence of the hydrogen leak since RTF. The problem was solved by a change of the flight seal design, and modifications to the alignment of the ground umbilical carrier plate's feet on the tank. Chris Bergin, "SCRUB: Weather delays Endeavour 24 hours – ET-134 sports final tank mods," February 6, 2010, http://www.nasaspaceflight.com/2010/02/live-sts-130-attempt-1-tank-mods/.
[1375] The thin reinforcing strips of aluminum added to provide increased strength were called radius blocks.

provide additional strength and to make them less susceptible to stress-relief fractures.[1376] Foam insulation was reapplied after the modifications to the stringers were made.[1377]

The Final Flight Tanks

The last two ETs to fly out the SSP were ET-122 and ET-138. **ET-122** originally was scheduled to serve as the "Launch on Need" tank for STS-134 when this mission was the last planned flight of the SSP. Fabrication of ET-122 was completed nine years earlier, in November 2002. At that time, because there was no room at KSC to store the tank, it was placed into storage at MAF. During RTF operations following the *Columbia* accident, ET-122 was modified by the removal of ramps, bipod fittings, and the tank flange closeout between the intertank and the LH2 line. Also, ice frost ramp extensions were added to the LH2 PAL ramps, and an ET camera system and internal electrical harnesses were installed. Subsequently, ET-122, still undergoing modifications in Cell A of the Vertical Assembly Building at MAF, was damaged when Hurrricane Katrina hit the facility on August 29, 2005. NASA approved a plan to restore the tank to flight configuration in November 2008. Repairs were made to the LO2 tank and the intertank, and damaged foam was removed and replaced. ET-122 rolled out at MAF on September 20, 2010, and arrived at KSC aboard the *Pegasus* barge on September 28, 2010. It flew with STS-134 (*Endeavour*), launched on May 16, 2011.

Thirty-one years after the first flight ET was delivered to KSC, the last newly manufactured production tank, **ET-138**, arrived at KSC in July 2010, following its roll out on July 8, 2010. Originally scheduled to fly with STS-134 (*Endeavour*), it was later reassigned to STS-135 (*Atlantis*). ET-138 featured the modifications that had been made to ET-137. Specifically, to provide additional strength, radius block doublers were installed to the tops of the rib-like stringers all the way around the upper end of the intertank.[1378] The last flight tank featured artwork in the form of a commemorative logo painted on a 3'-high by 5'-wide intertank access door near the top of the tank. The logo was designed by Blake Dumesnil, an engineer at JSC, and hand-painted on the door by Lockheed Martin graphic artist Jon Irving. The logo depicted the Space Shuttle flanked by the U.S. flag, fourteen stars to commemorate the astronauts lost aboard *Challenger* and *Columbia*, and the shuttle fleet.[1379]

[1376] William Harwood, "Shuttle fueling test to check Atlantis' external tank," June 15, 2011, http://www.spaceflightnow.com/shuttle/sts135/110615tanking/index.html; Bartolone, interview.
[1377] Steven Siceloff, "Spotlight on external fuel tank draws Facebook questions," *Spaceport News*, January 28, 2011, 3, 6.
[1378] Harwood, "Shuttle fueling test."
[1379] Linda Herridge, "Last external fuel tank arrives for STS-134 mission," *Spaceport News*, October 1, 2010, 1; NASA, "Atlantis' External Tank to Feature Commemorative Logo," June 9, 2011, http://www.nasa.gov/mission_pages/shuttle/flyout/flyout_shuttle_logo.html.

ET Physical and Functional Descriptions

ETs by the Numbers

A total of 136 flight ETs were manufactured and assembled by Lockheed Martin at NASA's MAF. This included six SWTs, eighty-five LWTs, and forty-five SLWTs. In accordance with data from Lockheed Martin, as provided in the table that follows, the peak period of ET manufacture was between 1983 through 1986.[1380] A total of thirty-five tanks were delivered to KSC during these years, averaging eight to nine tanks per year. The years 1984 and 1985 were distinguished by the delivery of ten and eleven tanks, respectively. Beginning in 1987, in the aftermath of the *Challenger* accident, and continuing through 1993, only three or four ETs were delivered each year. Subsequently, production increased, and from 1994 through 2002, deliveries averaged six tanks per year. The *Columbia* accident in 2003 stopped all ET shipments to KSC until 2006, and as a result, by the end of 2007, only four tanks were delivered to KSC.[1381]

Lockheed Martin did not assign the numbers ET-7 and ET-95 to any completed and operational external tank.[1382] According to Pessin, ET-7 "was never completed," and the pieces were "never assembled."[1383] In accordance with the Lockheed Martin numbering sequence, both ET-7 and ET-95 marked the transition from the SWT to the LWT, and from the LWT to the SLWT, respectively. ET-94, a LWT, was used as a spare and housed at MAF. In 2010, it was used for studies of a Shuttle-derived vehicle; it was not in flight configuration.

Four tanks were delivered to Vandenberg before they were redelivered to KSC: ET-23, -27, -33, and -34. ET-27, which flew on STS-34, was originally scheduled for the first Shuttle flight from Vandenberg.

In addition to the flight tanks, Lockheed Martin fabricated three test articles that were never flown. These were the Structural Test Article (STA); the GVT-ET, and the MPTA-ET.

[1380] Lockheed Martin, "Flight Info."
[1381] Following Hurricane Katrina in August 2005, MAF was out of production for about one year. Bartolone, interview.
[1382] The numbering sequence used by Lockheed Martin differs from that used by NASA and others (e.g., Jenkins 2001). Thus, while Lockheed Martin did not use ET-7, NASA lists ET-7 as the sixth standard weight tank (SWT-6), which flew on STS-7. Jenkins designates the MPTA-ET as ET-1.
[1383] Pessin, "Lessons Learned," 19, 20.

Deliveries of Flight External Tanks to the Kennedy Space Center.[1384]

Year	Total	Tank Numbers (ET-#)	SWT	LWT	SLWT
1979	1	-1	1		
1980	0		0		
1981	2	-2, -3	2		
1982	4	-4, -5, -6, -8	3	1	
1983	7	-9 through -15		7	
1984	10	-16 through -25		10	
1985	11	-26 through -36		11	
1986	7	-37 through -43		7	
1987	4	-44 through -47		4	
1988	3	-48 through -50		3	
1989	4	-51 through -54		4	
1990	4	-55 through -58		4	
1991	3	-59 through -61		3	
1992	4	-62 through -65		4	
1993	4	-66 through -69		4	
1994	5	-70 through -74		5	
1995	6	-75 through -80		6	
1996	7	-81 through -87		7	
1997	4	-88 through -91		4	
1998	6	-96 through -101			6
1999	7	-92, -102 through -107		1	6
2000	5	-93, -108 through -111			5
2001	6	-94, -112 through -116			6
2002	6	-117 through -122			6
2003	1	-123			1
2004	0				0
2005	0				0
2006	1	-124			1
2007	2	-125, -126			2
2008	4	-127 through -130			4
2009	5	-131 through -135			5
2010	3	-136 through -138			3
Totals	136		6	85	45

Note: ET-122 originally was delivered on November 21, 2002, subsequently brought back to MAF for modifications, then returned to KSC in 2010 for flight.

[1384] Data compiled from Lockheed Martin, "Space Shuttle Flight Info," March 2010, 100-103, accessed August 2011, http://www.lockheedmartin.com/data/assets/ssc/michoud/.

General Description and Coordinate System[1385]

The ET (Figure No. D-17) measured 153.8' in length, 27.6' in diameter, and had a propellant capacity of approximately 1.6 million pounds (535,000 gallons). The inert weight of the SLWT was roughly 58,500 pounds. The ET was comprised of three primary structures: two separate propellant tanks and an intertank section located between them (Figure Nos. D-18, D-19). The upper tank held LO2 at minus 297 degrees F. The lower tank contained LH2 at minus 423 degrees F. Flanges at the top and bottom of the ribbed intertank connected the three elements. All power, pressure, and purges were received from either the orbiter or ground facility. The only active components on the ET were the vent/relief valves.[1386]

The SLWT was made of aluminum-lithium and steel alloys and titanium. A SOFI material approximately one inch thick was applied to the exterior of the entire tank, with 282 square feet of underlying ablators to prevent ice build-up and to protect the tank from engine and aerodynamic heating.[1387] Overall, the ET contained 481,450 parts, 38 miles of electrical wiring, 1,000 feet of insulated sleeving, 50 feet of coaxial cable, 4.7 miles of tape, 7,000 feet of safety wire, and 4,000 pounds of thermal protection materials. It required more than one-half mile of welding to join together the aluminum panels that formed the tank.[1388]

The baseline description of the SLWT contained in the following sections is from Lockheed Martin's *Space Shuttle External Tank System Definition Handbook SLWT*, dated December 1997. Upgrades and improvements which post-date 1997 have been incorporated, to the extent possible. The physical and functional descriptions are organized by major ET system. Included are descriptions of the structures system, propulsion system, electrical system, and TPS, as well as interface hardware.

For the purposes of clarity and consistency, references to stations within the ET coordinate system have been minimized. The ET coordinate system used three reference planes. The "Y" reference plane intersected the ET (and attached orbiter) longitudinal centerline. The "Z" reference plane was parallel to the longitudinal centerline of the ET and the attached SRBs, and was arbitrarily located 400" from the ET longitudinal centerline in a direction opposite the attached orbiter. The "X" reference plane was nominal to the Y and Z planes, and was arbitrarily located 2,058" forward of the center of the two aft ET-to-orbiter structural attach points. Fore and aft distances along the longitudinal ET axis were designated ET "Stations," and were measured as positive (+) distances from the X reference plane. Right and left designations are in the +Y and –Y directions, respectively, coinciding with the orbiter pilot's right and left

---

[1385] This description focuses on the SLWT because it was the end state ET for the SSP.
[1386] Lockheed Martin, *Space Shuttle External Tank, System Definition Handbook SLWT, Layout Drawings Volume II* (New Orleans, LA: Lockheed Martin, December 1997), 4-2.
[1387] Lockheed Martin, "Fact Sheet Space Shuttle External Tank," July 2011, accessed August 2011, http://www.lockheedmartin.com/data/assets/ssc/michoud/FactSheets/ETFact Sheet.pdf.
[1388] Lockheed Martin, "Space Shuttle External Tank Statistics and Comparisons," June 2011, accessed August 2011, http://www.lockheedmartin.com/data/assets/ssc/michoud/FactSheets/ETStatistics.pdf.

perspective, when the orbiter was attached to the ET. Angular measurements around the circumference of the ET (within an X plane) were referenced to 0 degrees in the +Z direction (toward the orbiter); positive angles were clockwise looking forward.[1389]

Structures System

Three primary elements comprised the ET structures system: the LO2 tank, located in the forward position; the aft-positioned LH2 tank; and the unpressurized intertank, which connected the two propellant tanks. The intertank housed instrumentation and processing equipment, and provided one of the attachment structures for the SRBs. The LH2 tank was approximately twice as large as the LO2 tank. The basic structure was made of aluminum alloys 2024, 2195, 2219, and 7075.

Liquid Oxygen Tank

The LO2 tank was an ogive-shaped aluminum monocoque[1390] structure, which was designed to reduce aerodynamic drag and aerothermodynamic heating (Figure Nos. D-20, D-21). It was composed of a fusion-welded assembly of preformed chemically-milled gores and panels, and machined fittings and ring chords. The LO2 tank had a volume of approximately 19,463 cubic feet designed to contain approximately 1.38 million pounds (145,000 gallons) of oxidizer. The empty weight was approximately 12,000 pounds. The LO2 tank measured 27.6’ in outside diameter and 54.6’ long, and operated in a pressure range of 20 to 22 pounds per square inch, gauge (psig). Vortex and slosh baffles were mounted in the LO2 tank to minimize liquid residuals and damp fluid motion. A 17”-diameter feedline conveyed the LO2 from the LO2 tank through the intertank, then outside the ET to the aft right-hand ET/orbiter disconnect umbilical. The LO2 flowed through the feedline at approximately 2,787 pounds per second, with the SSMEs operating at 104 percent, or a maximum flow of 17,592 gallons per minute. The LO2 tank’s nose cone, which contained electrical system components, functioned to reduce drag and heating, and also acted as a lightning rod.[1391]

Aluminum alloys (2024, 2195, and 2219) were used exclusively in the fabrication and assembly of the LO2 tank structure. Compared with the LWT design, the weld lands in the SLWT were increased by up to 0.25” in thickness.[1392] The “robust weld lands” connected the ogive to ogive, barrel panel to barrel panel, dome gore to dome gore, and dome cap to dome body.

[1389] Martin Marietta, *Handbook, Configuration & Operation*, III-5.
[1390] Monocoque is a type of construction in which the outer skin carries all or a major part of the stresses, as distinguished by an internal frame or truss system.
[1391] USA, *Crew Operations*, 1.3-2; Lockheed Martin Corporation, “External Tank,” 2010, accessed August 2010, http://www.lockheedmartin.com/ssc/michoud/ExternalTank/index.html.
[1392] Lockheed Martin, *Handbook (SLWT)*, 6-3.

The **major assemblies** which comprised the LO2 tank were the nose cone and cover plate, the forward and aft ogive sections, the cylindrical barrel section, the slosh baffle, and the LO2 aft dome (Figure No. D-22). A description of each follows.

A **nose cone** and a flat removable **cover plate** topped the ogive nose section. The conical-shaped **nose cone**, mounted on the ogive, was 2.54' long and was constructed of 0.252"- to 0.336"-thick epoxy graphite composite. The design for the original SWT nose cone used over 1,000 fasteners to assemble multiple sheet metal pieces. It was covered with TPS materials. In June 1989, MSFC and Martin Marietta began developing a new advanced nose cone constructed from a high-temperature resistant composite. The new composite nose cone was manufactured by the MSFC Productivity Enhancement Center from eighteen to twenty-one sheets of graphite phenolic cloth inside a graphite mold. The new design could withstand temperatures in excess of 900 degrees F, thus eliminating the need for the TPS. The composite nose cone resulted in a weight savings of 21 pounds.[1393]

The forward end of the nose cone featured a cast aluminum lightning rod, which protected the entire Space Shuttle vehicle at the pad. The lightning rod, which measured 13.34" long, was attached to the nose cone by six 0.25"-diameter bolts. The nose cone featured provisions for two stainless steel louvers that were part of the oxidizer vent system. It also had a penetration for the electrical cable tray and the LO2 pressurization line. The nose cone was attached to the nose cone brackets by twenty-nine 3/8"-diameter bolts.[1394]

The removable **cover plate** provided a location for mounting propulsion system components. Machined from 2219 aluminum plate, it measured 39" in diameter, 0.35" thick, and weighed 79 pounds. The cover plate incorporated machined stiffeners, and was joined to the ogive forward ring by ninety-two 5/16"-diameter bolts. A pressure seal of Naflex provided a gastight joint. Removal of the plate provided a 36"-diameter access opening to the LO2 tank.[1395]

The 612"-radius **ogive section** was formed by welding a forward fitting, eight forward gores, and twelve aft gores. The forward fitting was a one-piece, machined forging that included the cover plate mating-and-sealing surface. It was butt welded to the forward ogive gore assembly. The forward ring contained a 1.4" penetration for the electrical feed-through connector.[1396]

One forward and one aft gore section had locally thickened skin pads and weld tabs for the attachment of support brackets for the LO2 pressurization line and electrical cable tray. The skin pads and weld tabs continued over the adjoining barrel section.[1397] All ogive gore panels were

---

[1393] Jenkins, *Space Shuttle*, 423. Two non-production units were tested in January 1994, and the first production unit was used on ET-81.
[1394] Lockheed Martin, *Handbook (SLWT)*, 6-6.
[1395] A Naflex seal is a metallic seal with a redundant sealing feature; it was created by North American Aviation, Inc. Lockheed Martin, *Handbook (SLWT)*, 6-7, 6-16.
[1396] Lockheed Martin, *Handbook (SLWT)*, 6-7.
[1397] Lockheed Martin, *Handbook (SLWT)*, 6-8.

chemically-milled on both sides, and edge trimmed and butt welded during assembly to form the ogive section. An extruded "T" ring frame was butt welded to the aft edge of the ogive section and to the forward edge of the barrel section of the LO2 tank. This frame provided for the forward attachment of the slosh baffle and contributed to the tank's stability. The frame was pre-formed to a circular shape in four, ninety degree segments. The four segments were butt welded together to complete the frame.[1398]

Mounted to the forward ogive gore panel was the mast for the LO2 level and temperature sensors. The mast measured approximately 82.8" long, with a 3.1" outside diameter and a wall thickness of 0.083".[1399] Also attached to the forward ogive gore, by means of butt welding, was a fitting made from a single piece of machined 2219 aluminum. This fitting provided attachment and sealing features for the nose cone and the cover plate.[1400]

The **cylindrical barrel section**, which measured approximately 98.2" in length, was fabricated from four chemically-milled and formed panels of 2219 aluminum plate welded together. Skin thicknesses on the two side panels were tailored in grid fashion to accommodate SRB thrust loads. The other two panels were identical except for three thickened skin pads and weld tabs on one panel. These tabs supported the cable tray and GO2 pressure line extending over the barrel.[1401]

The **LO2 slosh baffle assembly**, fabricated in two sections, consisted of aluminum rings tied together with longitudinal stringers and tension straps. The main stabilizing ring frame served as the aft baffle support ring at the juncture of the barrel section and the LO2 tank dome. This ring was comprised of thirty-two machined forgings alternating with thirty-two stiffened webs, plus aluminum chord. The webs of the frames, web stiffeners, and stringers were riveted, while the tension straps were pin joined.[1402] The baffle assembly, primarily made of 2024 aluminum sheet, was designed to prevent fluid slosh.

The **LO2 aft dome** section was comprised of the aft (dome-to-barrel) ring frame, twelve identical gore segments, and a 140"-diameter dome end-cap. The end-cap included the LO2 contoured feed outlet, a 36"-diameter manhole access, and a 1.28"-diameter penetration for the aft LO2 low-level sensor electrical feed-through connector. The dome was assembled by welding together three pre-formed and chemically-milled gore skins and a quarter section of the extruded ring frame to form a dome quarter panel. The quarter panels were welded together, after which the dome end-cap was welded onto the assembly. The aft ring frame served as the weld juncture

[1398] Lockheed Martin, *Handbook (SLWT)*, 6-9.
[1399] Lockheed Martin, *Handbook (SLWT)*, 6-15.
[1400] Lockheed Martin, *Handbook (SLWT)*, 6-16.
[1401] Lockheed Martin, *Handbook (SLWT)*, 6-10.
[1402] Lockheed Martin, *Handbook (SLWT)*, 6-10, 6-17.

between the barrel section and the dome. The outer flange was mated to the intertank with 194 bolts of 9/16”-diameter.[1403]

The variable skin thickness of the dome gore panels was accomplished by chemical milling. Panel members were reinforced by a series of circumferential bands. The spherical dome cap was spun formed and then chemically milled on both sides. The cap featured cutouts for the contoured LO2 outlet/inlet fitting and the manhole fitting, and for an electrical feed-through connector. The outlet/inlet fitting was welded to the dome cap.[1404]

A **vortex baffle** was installed to the end-cap, internal to the tank. The baffle served to reduce fluid swirl resulting from the Coriolis effect, and prevented entrapment of gasses in the delivered LO2. The 160”-diameter vortex baffle was attached to the dome cap at four locations, with two fasteners at each location. The assembly included four webs with upper and lower caps, and vertical stiffeners stabilized with diagonal straps. The webs and caps were joined at the center with a splice plate at the bottom and a splash plate on top. The 0.02”-thick webs contained a total of 124 holes which served to both lighten the structure and reduce the slosh locally. A four-segment, 800-micron filter screen, which helped to anchor the baffle assembly, was mounted to the lower caps of the vortex baffle.[1405]

A 45”-diameter manhole fitting, welded to the dome cap, provided a 36”-diameter clear access to the tank interior. The fitting featured ninety-two attachment points for mating to the machined aluminum manhole cover. The fifty-seven pound manhole cover measured 40.32” in overall diameter and 0.185” thick at the center. It provided an interfacing sealing surface with the manhole fitting, as well as a means for making a leak check of the primary seal.[1406]

Intertank

The intertank was a semi-monocoque, cylinder-shaped structure comprised of external stringers and internal frames (Figure No. D-23). It connected the two propellant tanks, housed instrumentation and processing equipment, and provided the attachment structure for the forward end of the SRBs. Flanges on the bottom and top ends of the intertank attached with the LO2 and LH2 tank assemblies. The intertank measured 270” (22.5’) long, 331” (27.6’) in diameter, and weighed approximately 12,100 pounds. Aluminum alloys were used exclusively in the intertank structure, with the exception of fasteners and the SRB fitting socket inserts, which were steel.[1407] The primary functions of the intertank were to receive and distribute all thrust loads from the SRBs, and to provide structural continuity. The intertank also provided a carrier plate assembly

[1403] Lockheed Martin, *Handbook (SLWT)*, 6-11.
[1404] Lockheed Martin, *Handbook (SLWT)*, 6-12.
[1405] Lockheed Martin, *Handbook (SLWT)*, 6-13.
[1406] Lockheed Martin, *Handbook (SLWT)*, 6-14.
[1407] Lockheed Martin, *Handbook (SLWT)*, 7-3.

that interfaced with the fluid, electrical, and pneumatic systems ground facilities.[1408] The major structural elements of the intertank included two thrust panels, six stringer-stiffened panels, ring frames, and the SRB beam (intertank crossbeam) (Figure No. D-24).

The two **thrust panels** were rough machined from 2219 aluminum plate, and formed to cylindrical segments with a radius of approximately 165". They were final machined to a finished size of 2.06" by 130" by 270.35". Skin thickness was variable, depending on the location. Each panel was comprised of twenty-six external parallel ribs. These, in addition to seven circumferential ribs, were designed to prevent buckling of the intertank. Rib thickness ranged between a minimum of 0.17" to 1.05" near the SRB fittings; circumferential rib thickness varied from 0.5" at the center of the panel to 0.18" at the outer edge.[1409] Two longerons of extruded aluminum were mechanically fastened to each thrust panel, one on each side of the SRB fitting, to provide added stability. The longerons measured 114" long, 3" wide, and 5" high, with a maximum thickness of 0.22". They extended through the two smaller ring frames, and ended near the LO2 tank attachment flange ring.[1410]

Each of the six **skin/stringer panels** was made of two 2090 aluminum sheet skins mechanically spliced using longitudinal butt straps. Skin doublers, also of 2090 aluminum sheet, provided reinforcement for areas where the skin was penetrated for the ET intertank carrier plate assembly, the access door opening, venting, and the entry of cables and lines. Additional skin reinforcing doublers were located adjacent to the thrust panels and the LO2 tank attachment flange ring. The skin doublers were located both internally and externally. Eighteen external stringers were equally spaced around each panel to provide buckling and flutter resistance, to distribute loads to the attachment flanges, and to provide for the attachment of mounting brackets for propulsion and electrical subsystem lines and cable trays. The aluminum stringers were mechanically fastened to the skin panels and flanges.

The intertank featured one **main ring frame**, which distributed SRB loads to the intertank skin, and four **intermediate ring frames**, which provided intertank skin panel stability. The main ring frame adjoined the SRB thrust fitting. It was constructed of four quadrant subassemblies, each built of outer and inner tee chords machined from 7075-T73511 aluminum extrusions and joined to webs to form an I-beam measuring 20" deep. The outer chords were fastened to the cylindrical skin panels. The width of each outer chord was 6" for a length of 53" at the end which fastened to the SRB fitting, 6" for a length of 54" adjacent to the access door in one quadrant, 3.8" at the end spliced to the adjacent chord, and 3.2" wide for the remainder of its length. The inner chord was a uniform 3.86" wide. The web thickness varied from 0.180" to 0.05" with increasing distance from the SRB fitting.[1411]

[1408] Lockheed Martin, *Handbook (SLWT)*, 7-2.
[1409] Lockheed Martin, *Handbook (SLWT)*, 7-4, 7-5.
[1410] Lockheed Martin, *Handbook (SLWT)*, 7-6.
[1411] Lockheed Martin, *Handbook (SLWT)*, 7-7.

The four intermediate ring frames were of similar construction, forming an I-beam measuring 12” deep. However, there were two significant differences among the four intermediate ring frames. The ring frame adjacent to the access door had a locally wider outer chord section. Secondly, the two ring frames located in the forward half of the intertank had the outer chords cut and portions of the webs notched to straddle the two longerons.[1412]

The **SRB beam assembly** was a rectangular box beam consisting of top and bottom chords, stiffened webs, stability bulkheads, and SRB thrust fittings, all mechanically joined. It measured 42.95” deep at the center and tapered to 26” (at the ends) by 15” wide. The SRB beam spanned 345” between the centerlines of the two SRB thrust fittings which formed the ends of the assembly. The top (forward) chord was an extruded and machined 7075-T86 aluminum channel with extensions for attaching web members. The bottom chord was similar to the top, and both were fastened to the SRB fitting. Side webs of 7075-T6 aluminum sheet were joined to the top and bottom beam chords. The webs located in the area of the ring frame junction with the SRB fitting were reinforced with tee and angle stiffeners. Two skin doublers provided further structural strength at this location. The two intertank SRB thrust fittings, of machined aluminum (7050-T73) forgings, were mechanically fastened to the chord ends of the SRB beam, the machined gusset fittings, the main frame outer chord, and the thrust panel.[1413]

Two **vent openings**, each with an area of 6 square inches, were provided at the forward end of the intertank. They were for venting during preflight environmental conditioning and for equalization of internal/external pressures in flight. Each **pressure vent** consisted of an elliptical-shaped tube which was installed on the intertank skin.[1414]

The intertank featured an **access door** made of composite graphite polyimide material, with sixteen plies on the skin and eight plies on the stringers. The door, recessed from the intertank stringer tops, was attached to the intertank with forty-four bolts.[1415]

Four **aerodynamic fairings** enclosed the penetrations for the LO2 feedline, the gaseous hydrogen pressure line, and at the two electrical cable tray locations. The fairings were fastened to the tops of the stringers immediately fore and aft of the penetration openings. In addition, supports for the cable trays and propulsion lines were fastened to the stringers by formed-sheet and machined brackets that bridged the stringer gaps.[1416]

[1412] Lockheed Martin, *Handbook (SLWT)*, 7-8.
[1413] Lockheed Martin, *Handbook (SLWT)*, 7-9, 7-10.
[1414] Lockheed Martin, *Handbook (SLWT)*, 7-10.
[1415] Lockheed Martin, *Handbook (SLWT)*, 7-11.
[1416] Lockheed Martin, *Handbook (SLWT)*, 7-12.

Liquid Hydrogen Tank

The cylindrical-shaped LH2 tank was a semimonocoque structure fabricated exclusively of aluminum alloys (Figures No. D-20, D-25, D-26). It was comprised of welded barrel sections and ring frames, and was capped on both ends by modified ellipsoidal domes. The LH2 tank measured 331" (27.6') in outside skin diameter and 1,160" (96.7') long. It had a volume of 52,371 cubic feet, and held approximately 231,000 pounds (390,000 gallons) of propellant fuel, which included a 3 percent ullage.[1417] The empty weight was approximately 29,000 pounds.[1418] The LH2 tank was roughly two-and-one-half times larger than the LO2 tank, but weighed only one-third as much when filled. This was because LO2 is sixteen times heavier than LH2. The LH2 tank contained an anti-vortex baffle and siphon outlet to transmit the LH2 from the tank through a 17" line to the left aft umbilical. The LH2 feedline flow rate was 465 pounds per second with the SSMEs at 104 percent, or a maximum flow of 47,365 gallons per minute. The operating pressure range was 32 to 34 psia.

A frame located at the juncture of the forward dome and the forward barrel contained a flange for joining the LH2 tank to the intertank. This frame also provided the structure for the ET/orbiter forward attach point. A frame at the juncture of the aft dome and aft barrel contained the structure for the ET/SRB aft attachment, as well as for the aft ET/orbiter attachment.[1419]

The **major assemblies** which comprised the LH2 tank were the forward and aft domes, the cylindrical barrel sections, and the major ring frames (Figure No. D-27). A description of each follows.

The **LH2 forward dome** was a welded assembly of twelve gore segments and a dome cap, all fabricated from 2195-T8A4 and 2219-T87 aluminum plate. The dome shape and manufacturing techniques were the same as for those used for the LO2 tank. Gore skin thickness was tapered to maintain stress uniformity and each gore was chemically milled on both sides to equalize skin stresses. Thickness varied from a minimum of 0.066" near the aft edge of the gore to 0.084" near the dome cap. The membranes were reinforced by a series of circumferential chemically milled bands. The dome cap measured 140" in diameter and was 0.092" thick, with the exception of the weld lands. It was machined to accommodate installation of the LH2 vent valve, the LH2 pressure line fitting, the electrical feed-through fitting, the forward manhole fitting, and the LH2 tank manhole covers.[1420]

[1417] Ullage is defined as: 1. the amount of liquid within a container that is lost, as by leakage or evaporation; 2. The amount by which a container falls short of being full; and 3. The free space above the liquid contained in a barrel, drum, or tank, provided to accommodate the expansion of the liquid. http://www.the freedictionary.com/ullage; www.businessdictionary.com/definition/ullage.html.
[1418] USA, *Crew Operations*, 1.3-3; Lockheed Martin Corporation, "External Tank."
[1419] Lockheed Martin, *Handbook (SLWT)*, 5-2.
[1420] Lockheed Martin, *Handbook (SLWT)*, 8-5.

The **LH2 tank aft dome** was similar in shape and construction to the LH2 tank forward dome and the LO2 tank domes. The major difference between it and the LH2 tank forward dome was the provision for the mounting of fittings. Provisions for tank access were incorporated in the aft dome cap, and the manhole fitting was similar to those on both the LO2 tank domes and the LH2 tank forward dome. Unlike the LWT design, the SLWT did not have a second manhole cover.[1421] The fitting for the LH2 feedline was unique because of the angle at which it penetrated the dome, and because of the compound curve of its flange. A vortex baffle assembly was located at the LH2 feedline siphon outlet just above the aft dome. This assembly was comprised of four identical baffle webs formed of 2024 aluminum. Outer frame chords of extruded tee-shaped aluminum were riveted to each web. The webs contained fluid damping holes and stiffeners.[1422]

The four **cylindrical barrel sections** were fabricated of 2195-T8M4 aluminum plate. Each section was a welded assembly made from eight orthogrid stiffened skin panels. Two basic orthogrid pocket configurations were used throughout the skin panels. The skin membrane thickness varied from panel to panel, from a minimum of 0.084” to a maximum of 0.555”. The thickness of the weld lands at the edges of each panel was generally 0.325”. The skin panels included provisions for mounting support fittings for propulsion system lines and electrical cable trays. Two longerons, made from 2219-T6 aluminum forgings, were butt welded into the skin panels of the aft barrel section. The longerons measured approximately 181.75’ long by 32.496” wide.[1423]

Five **major ring frames** joined the dome and barrel sections together. These frames were I-Beam-shaped with varying depths and chord configurations. With one exception, the frames were fabricated in 90-degree segments at the subassembly level. They were then spliced by circumferential weldments along the outer chord, and by mechanically attached splice plates and angles at the web and inner chord. The outer chord was made from extruded 2195-T8A3 and 2219-T8511 aluminum; the inner chord was fabricated of extruded 2024-T8511 aluminum. The webs were made of 2024-T81 sheet and plate aluminum.[1424] The forward and two aft major ring frames were stiffened by radially-oriented web stiffeners. The other two frames required no web stiffening. Each major ring frame was stabilized by struts which tied the frame inner chord to the barrel orthogrid at circumferential locations.[1425]

Propulsion System

The ET contained all the fuel and oxidizer to feed the orbiter’s three main engines (Figure No. D-28). These propellants were delivered between the tanks and orbiter interface through **17”-diameter feedline disconnects.** The complete ET propulsion system was comprised of the LO2

[1421] This feature was eliminated on the aft dome as a weight saving measure.
[1422] Lockheed Martin, *Handbook (SLWT)*, 8-14, 8-15.
[1423] Lockheed Martin, *Handbook (SLWT)*, 8-6, 8-7, 8-19.
[1424] Lockheed Martin, *Handbook (SLWT)*, 8-4, 8-9.
[1425] Lockheed Martin, *Handbook (SLWT)*, 8-9 through 8-13.

and LH2 feed systems; the LO2 and LH2 tank pressurization and vent/relief systems; the intertank and tank environmental control systems; and the ET intertank carrier plate assembly.

Feed Systems

Each ET contained five **propellant umbilicals** which fueled the main engines. Two umbilicals were for the LO2 tank (one for LO2 and one for GO2) and three were for the LH2 tank (two for LH2 and one for GH2). These lines carried the fuel, oxidizer, gases, electrical signals, and power between the tank and the orbiter.

Eight **propellant depletion sensors**, designed for propellant loading control, were located inside the ET, four each for the fuel and the oxidizer. The LO2 oxidizer sensors were initially mounted on the LO2 feedline manifold (later relocated to the oribiter side of the feedline), and the LH2 fuel sensors were mounted on the bottom of the LH2 tank. The orbiter's onboard computers monitored the mass of the Shuttle vehicle, which lessened as the fuel was depleted. If any two of the fuel or oxygen sensors read a dry condition, the engines would be shut down and the ET jettisoned. The location of the sensors allowed the maximum amount of oxidizer to be consumed, while allowing sufficient time to shut down the engines before the oxygen pumps ran dry (known as "cavitation"). In addition, 1,100 pounds of LH2 were loaded over and above that required by the 6:1 oxidizer/fuel engine mixture ratio to assure that when the main engine cutoff occurred, the propellant mixture was fuel rich. Otherwise, oxidizer-rich engine shutdowns could cause burning and severe erosion of the engine components.[1426]

The **LO2 feed system** consisted of the LO2 feedline and the helium inject line. The LO2 feedline was a 17"-inner diameter insulated pipe made of aluminum and corrosion-resistant steel. It ran up the side of the LH2 tank through a slotted port in the intertank skin to a joint on the outlet of the LO2 tank.[1427]

The LO2 feedline assembly consisted of nine sections, including the forward flexible assembly, the flexible elbow, four straight sections, an aft flexible assembly, an aft elbow, and the ET/orbiter disconnect assembly. These sections were joined with bolted flanges which contained seals to control leakage. The forward flexible assembly was located entirely within the intertank. The elbow assembly penetrated the intertank skin and ran down the side of the ET a distance of approximately 108". The four straight sections ran down the side of the LH2 tank from the flexible elbow to the aft flexible assembly, a distance of approximately 840". The upper section was 247.7" long, the middle two sections were 246.7" long, and the lower section was 102.5" long. The aft elbow joined the 76.6"-long aft flexible assembly to the ET half of the LO2 disconnect at the right ET/orbiter umbilical disconnect plate. The straight sections were made of

[1426] NASA KSC, "The Lightweight Space Shuttle External Tank," NASA Fact Sheet (Florida: Kennedy Space Center, February 1983), Sweetsir Collection, Box 50E.3, Folder 125, Kennedy Space Center Archives, Florida; USA, *Crew Operations*, 1.3-3, 1.3-4.
[1427] Lockheed Martin, *Handbook (SLWT)*, 9-9.

2219 aluminum and the aft elbow was a casting of A357T6 aluminum. The flexible sections were fabricated of 347 stainless steel, 21-6-9 stainless steel and Inconel 718. The feedline had flexible joints in five places which allowed for fabrication and installation tolerances, thermal expansion, and relative motion during liftoff and flight. Seven supports secured the LO2 feedline to the tank structure, including five pivoting supports located along the length of the LH2 tank.[1428]

The helium inject line, made of 3/8" outer diameter stainless steel tubing ran through the intertank, down the LH2 tank, inside the cable tray, and into the LO2 aft elbow. This line introduced a controlled flow of helium into the aft end of the LO2 feedline to prevent geysers during propellant loading and hold before launch. It was not operational during flight.[1429]

The **LH2 feed system** consisted of the LH2 feedline and the LH2 recirculation line. The LH2 feedline was a 17"-inner diameter pipe made of aluminum and corrosion-resistant steel. The internal/external configuration ran from the ET half of the LH2 disconnect through a flanged port on the upper LH2 tank aft dome, to near the bottom of the dome. The uninsulated internal feedline section consisted of a 35"-long articulated bellows segment and a bell-mouth siphon segment. The LH2 internal feedline assembly was fabricated from 304L and 321 stainless steel. The 42"-long external feedline section, fabricated of 321 and 347 stainless steel, 21-6-9 stainless steel, and Inconel 718, contained an articulated bellows assembly with an insulation jacket to prevent the formation of liquid air during countdown and launch operations.[1430]

The LH2 recirculation line measured 4" in diameter by approximately 60" long. It was constructed of 21-6-9 stainless steel and insulated with SS-1171 and SLA-561. The line connected the 4" disconnect valve in the ET/orbiter umbilical assembly with the LH2 tank. It carried warm LH2 from the engine back to the ET during propellant loading and hold. The recirculation line incorporated two free bellows assemblies with argon gas-filled jackets, similar to the LH2 feedline.[1431]

Tank Pressurization and Vent/Relief System

The pressurization and vent relief system, which regulated the tank pressure, incorporated the LO2 and LH2 tank pressurization subsystems and the LO2 and LH2 tank vent/relief subsystems.

The **LO2 Tank Pressurization Subsystem** consisted of a GO2 pressurization line fabricated of Inconel 718 corrosion-resistant steel tubing. The 2"-outer diameter line extended from the GO2 pressurization disconnect on the aft right ET/orbiter umbilical, up the exterior of the LH2 tank, intertank, and LO2 tank, and terminated at the LO2 tank forward cover plate. The pressurization

[1428] Lockheed Martin, *Handbook (SLWT)*, 9-10 through 9-12.
[1429] Lockheed Martin, *Handbook (SLWT)*, 9-14.
[1430] Lockheed Martin, *Handbook (SLWT)*, 9-15 through 9-17.
[1431] Lockheed Martin, *Handbook (SLWT)*, 9-18.

line was comprised of nine separate line assemblies: the upper flex line assembly, the upper curved line assembly, the upper transition line assembly, the mid flex line assembly, four straight assemblies, and the lower flex line assembly.[1432] All line sections were mated to each other and to their interfaces with flanged joints. Naflex Inconel 718 seals were used at each mechanical joint. A leak-test port was located at each joint to provide access between the primary and secondary sealing surfaces. The pressurization line was supported by thirty-three sliding supports and two fixed supports. The latter were located at the aft end of the intertank and at the forward end of the LO2 tank.[1433] A cylinder-shaped diffuser, located at the GO2 pressurization line outlet, was secured internally to the LO2 tank.

The **LH2 Tank Pressurization Subsystem** consisted of a 2”-outer diameter tube made of corrosion-resistant steel. The line extended from the GH2 pressurization disconnect on the aft left umbilical, to the LH2 tank, up into the intertank, and terminated at the cover plate mounted to the LH2 tank forward dome cap. A cylindrical-shaped GH2 diffuser was mounted to the cover plate inside the LH2 tank. The GH2 pressurization line consisted of an upper flex assembly, a straight line assembly, a lower flex assembly, a straight line section, and an aft flex assembly. The subsystem also included eleven flexible joints, two supports for the line upper assembly located within the intertank along the LH2 tank dome, and other sliding and fixed supports.[1434]

The **LO2 Tank Vent/Relief Subsystem** consisted of a two-stage GO2 vent/relief valve, a vent manifold, and two louver assemblies. This dual-function valve could be opened by ground support equipment for the vent function during prelaunch, and during flight when the ullage pressure of the LH2 tank reached 36 psig, or the ullage pressure of the LO2 tank reached 31 psig.[1435] The valve inlet was bolted to a port on the LO2 tank forward bulkhead cover plate. The outlet connected to the vent manifold. The inner manifold contained a bellows assembly. GO2 was discharged on opposite sides of the nose cap through the louvers.[1436]

The **LH2 Tank Vent/Relief Subsystem** included a single vent/relief valve inlet bolted to a fitting welded into the LH2 tank forward dome. The outlet was bolted to a vent duct, which in turn bolted to the vent disconnect on the intertank umbilical disconnect plate. The vent duct was bolted to the vent valve. A steel vent valve actuation line led from a 3/8”-diameter disconnect at the intertank umbilical carrier plate to an actuation port on the valve. The line followed and was attached to the side of the vent duct.[1437]

[1432] Lockheed Martin, *Handbook (SLWT)*, 9-19, 9-20.
[1433] Lockheed Martin, *Handbook (SLWT)*, 9-21.
[1434] Lockheed Martin, *Handbook (SLWT)*, 9-23, 9-24.
[1435] USA, *Crew Operations*, 1.3-3.
[1436] Lockheed Martin, *Handbook (SLWT)*, 9-26, 9-27.
[1437] Lockheed Martin, *Handbook (SLWT)*, 9-30.

Environmental Conditioning System

The ET environmental conditioning system consisted of an intertank purge and a hazardous gas detection system. These served to purge the intertank, the nose cap, and propellant tanks, as well as to sample the intertank environment for gas composition during propellant loading operations. The intertank was purged with dry, heated GN2 during propellant loading to prevent condensation of moisture, to preclude air ingestion through the intertank vents, and to avert a buildup of hazardous gases.[1438] Similarly, heated GN2 purged the ET nose cone cavity to provide an inert atmosphere and to minimize the ice/frost formation that would be caused by cold vent gas. The gas flow rate was approximately 13.5 pounds per minute.[1439]

ET Intertank Carrier Plate Assembly

The ET intertank carrier plate assembly was where the ground umbilical carrier assembly (GUCA) and the facility lines mated. The flight half of the ET/ground umbilical interface provided for the servicing of the pressurization and vent system, hazardous gas detection system, operational instrumentation system, and electrical power.[1440] The plate assembly was machined from aluminum alloy 2219 plate, and mechanically fastened to the skin panel by four flanges.[1441]

Electrical System

The ET's electrical system provided operational instrumentation, cabling, electromagnetic compatibility, and lightning protection. All electrical power was supplied by the orbiter, except for heater power which was provided by the ground facilities.

Operational Instrumentation

The operational instrumentation for the ET electrical system included thirty-five flight systems and ground systems sensors, as well as switches and the ice/frost heating subsystem. Of the sensors, four gas temperature sensors and two LO2 ullage pressure sensors were ground measurements; the others were flight measurements. The instrumentation provided status data to the orbiter, or to the launch facility, regarding temperature, pressure, and liquid levels prior to launch. After the *Columbia* accident, ground temperature measurements were added to control the bipod heaters.

The **thirty-five sensors** included the following:

- Two resistant-type transducer ullage temperature sensors, one for LO2 and the other for LH2;

[1438] Lockheed Martin, *Handbook (SLWT)*, 9-31.
[1439] Lockheed Martin, *Handbook (SLWT)*, 9-34.
[1440] Lockheed Martin, *Handbook (SLWT)*, 9-34.
[1441] Lockheed Martin, *Handbook (SLWT)*, 7-12.

- Four resistant-type transducer gas temperature sensors, including two in the intertank and two mounted on the nose cone plate;
- Four potentiometer-type, absolute-pressure transducer LH2 pressure sensors, of which one was for backup purposes only;
- Three variable reluctance-type, differential pressure transducer LO2 ullage pressure sensors;
- Two variable reluctance-type, pressure transducer LO2 ullage loading pressure sensors;
- Twenty liquid level and depletion sensors which indicated the presence or absence of LO2 or LH2.[1442] The LO2 depletion sensors were located in the orbiter while the LH2 depletion sensors were located in the ET.

The LH2 tank incorporated two vent valve position indicator **switches** to denote OPEN or CLOSED positions prior to launch; the LO2 tank had a CLOSED position only. These three vent valve switches were integral parts of the valve assemblies.[1443]

The **ice/frost heating subsystem** consisted of two calrod heaters mounted on each of the forward bipod spindle assemblies. These functioned to minimize ice accumulation on the bipod fitting. The heaters were powered and regulated by the launch facility.[1444]

Cabling

Both ET and Orbiter/SRB interface cabling were components of the electrical system. The **ET cabling system** provided hardware connections between the ET electrical components and orbiter interfaces. The system consisted of wiring, connectors, protected wire splices used in areas where connectors were not required, cabling, and disconnect panels located in the intertank that held bulkhead connectors. External cabling on the ET was routed through protective aluminum cable trays. The cable trays had removable covers and were protected by TPS on the external surfaces. The primary tray ran along the right shoulder of the ET. Twelve **orbiter/SRB interface cables** were located on the ET. The cables, which did not connect into the ET electrical system, ran through protective cable trays.[1445]

Lightning Protection

The primary lightning protection feature for flight was the nose spike located on the nose cone, described previously.

[1442] Lockheed Martin, *Handbook (SLWT)*, 10-2 through 10-6.
[1443] Lockheed Martin, *Handbook (SLWT)*, 10-7.
[1444] Lockheed Martin, *Handbook (SLWT)*, 10-8.
[1445] Lockheed Martin, *Handbook (SLWT)*, 10-9, 10-10, 10-14.

Thermal Protection System

The exterior surface of the ET featured a multi-layered thermal protection coating approximately 1" thick. SOFI for high insulation efficiency, and premolded ablator materials for dissipating heat were the primary tank constituents. The system also included phenolic thermal insulators. These were needed for the LH2 tank attachments to preclude air liquefaction and to reduce heat flow into the LH2 tank. The TPS prevented super cold LO2 (-297 degrees F) and LH2 (-423 degrees F) from forming ice on the outside surfaces of the ET; protected the skin surface from the aerodynamic heat of ascent as well as radiant heat from the engines; and maintained the propellants at an acceptable temperature. The SOFI had several property requirements. It had to adhere to the tank; had to withstand the cryogenic temperatures at the surface; had to withstand atmospheric stresses; had to keep the ET surface above 32 degrees; and had to be lightweight. The TPS weighed roughly 4,823 pounds.[1446]

The original SWTs featured a 1"-thick layer of two primary TPS materials: CPR-421, a fluorocarbon-blown, rigid-foam system applied to almost all exterior cryogenic surfaces, and SLA-561, an ablator used in areas of high aerodynamic heating.[1447] As previously noted, from the SWT to the SLWT, the constituent elements of the ET's TPS underwent several changes. The end-state SLWT featured four insulating foams: NCGI 24-57, NCFI 24-124, PDL 1034, and BX-265. SLA 561 was the primary ablator, with MA25S used for highly heated local areas.[1448] Each main element of the ET had its own TPS requirements, as summarized in the following table.

[1446] USA, *Crew Operations*, 1.3-3.
[1447] Martin Marietta, *Handbook, Configuration & Operation*. According to Lockheed Martin's *System Definition Handbook* , CPR-421 was adversely affected by sunlight and water, and thus, required a protective coating to protect it against ultraviolet radiation and moisture.
[1448] Lockheed Martin, *Handbook (SLWT)*, 4-4.

External Tank Thermal Protection.[1449]

TPS TYPE	MATERIAL: CHARACTERISTICS	ET LOCATION
Spray-on Foam Insulation (SOFI)	***NCFI 24-57***: A polyiso-cyanurate foam applied with blowing agent HCFC-141b. Has higher temperature stability than conventional urethane foams.	LH2 Tank Dome
	NCFI 24-124: A polyiso-cyanurate foam applied with blowing agent HCFC-141b. Has higher temperature stability than conventional urethane foams	LH2 Tank Barrel Intertank acreage LO2 Tank Ogive/Barrel
	BX-265: A polyurethane foam. Used for select closeout areas, primarily to protect against ice/frost and air liquefaction. May be sprayed or molded-in-place. In high heating locations when a BX-265 closeout is used, a SLA-561 underlayer is required.	LH2 Tank Apex Closeout LH2 Tank Aft Interfaces/Cable Tray Covers/Fairings LH2 Tank Longeron LH2 Tank Aft Struts LO2 Feedline Bipod Closeouts Intertank/LH2 Tank Flange Closeout Intertank/LO2 Tank Flange Closeout
Pour-on Foam Insulation (POFI)	***PDL 1034***: Used for ice/frost closeout applications and as a repair foam for small damaged areas. Suitable for filling difficult- shaped cavities.	LO2 Feedline LH2 Tank Aft Interfaces/Cable Tray Covers/Fairings LH2 Ice/Frost Ramps LO2 Ice/Frost Ramps Intertank/LH2 Tank Flange Closeout Bipod Closeouts Nose Cone
Molded Ablators (MA)	***MA 25S***: Used in areas of the ET/orbiter interface, and where heating rates exceed the capability of SLA-561. Can be used as a sprayable or bonded ablator.	Bipod Struts Nose Cone
Hand-packed Ablators	***SLA-561***: Used in areas of high heating. May be sprayed or used in molded form.	LH2 Tank Apex Closeout LH2 Tank Aft Interfaces/Cable Tray Covers/Fairings LO2 Feedline Fairing LO2 Cable Trays and Fairings

[1449] USA, "Vehicle Assembly Building External Tank Processing," (presentation, KSC, no date), 7.

The ET derived its distinctive color from the insulating foam. When first applied, the foam was light tan in color. Then, exposure to ultraviolet rays darkened or reddened the foam over time.[1450]

SOFI is a low-density, closed-cell foam which was used on the tank acreage to keep the propellants at optimum temperature while preventing a buildup of ice on the outside of the tank. It is a polyurethane-type foam composed of five primary ingredients: polymeric isocyanate, a flame retardant, a surfactant, a blowing agent, and a catalyst.[1451] The SOFI was applied over the SLA when both highly efficient insulation and high heating capability were required.[1452]

The larger sections of the tank were covered in NCFI 24-124. This SOFI type accounted for 77 percent of the total foam used on the ET. NCFI 24-57 was used on the aft dome of the LH2 tank. Both NCFI 24-124 and NCFI 24-57 were mechanically sprayed foams. PDL 1034, a hand-poured foam, was used for filling odd-shaped cavities. BX 265 foam was manually applied, or hand-sprayed, in the closeout areas, and applied mechanically on the feedlines and domes inside of the intertank.[1453]

The SLA is a denser composite material made of silicone resins and cork that dissipates heat by eroding. It was used on areas that were subjected to extreme heat, including the aft dome and the cable trays. The ablator thickness was defined primarily by the ascent mission phase.[1454] MA25S, a high temperature ablator, was developed by Lockheed Martin.

During the application process, TPS materials were subject to the formation of small voids caused by encapsulated air in the foam. This was especially the case around uneven areas, such as joints. To reduce the likelihood for voids, strict process controls for both automated and manual foam applications were implemented. Typically, foam was hand-applied around complicated areas.[1455]

Interface Hardware

The ET contained hardware for attachment and interface with the two SRBs, the orbiter, and with the ground launch facilities. The interfaces were both structural connections to the other stack elements, as well as umbilicals for the transfer of fluids and electrical power. The **ET/SRB**

[1450] Steve Roy, "Last Shuttle External Tank Rolling Out on July 8," July 7, 2010, http://www.nasa.gov/connect/chat/last_tank_rollout2.html.
[1451] The surfactant controlled the surface tension of a liquid, and thus, cell formation. "The blowing agent, HCFC 141b, created the foam's cellular structure by making millions of tiny bubbles or foam cells." NASA MSFC, *Thermal Protection System*.
[1452] Lockheed Martin, *Handbook (SLWT),* 11-2.
[1453] Closeouts were TPS applications conducted after final assembly and checkout; a minimum number were made at the launch site. They were most critical on areas where the insulation was applied on surfaces subjected to cryogenic temperatures. Lockheed Martin, *Handbook (SLWT),* 11-2.
[1454] Lockheed Martin, *Handbook (SLWT),* 11-2.
[1455] NASA, *Implementation Plan*, 1-1.

interfaces included four structural attach points plus electrical connections, per SRB. Of these, one forward attach point was located on the intertank, and three attach points were fitted on the aft LH2 tank section. The **ET/orbiter interfaces** included one forward and two aft connections. A **ground facility interface,** located at the intertank, provided ground services to purge the intertank and to actuate vent valves for prelaunch operations. In addition, the ET included interface provisions for the connection to transportation and handling support equipment.

ET/SRB Interfaces

The structural interfaces between the ET and the two SRBs consisted of eight attachment points, four on each side (left and right) of the ET. These included two forward interfaces (left and right) for SRB attachment and thrust transmission, and six aft stabilization interface points (three left and three right). The latter were connected to the ET aft major ring frame. In addition, two ET/SRB electrical interfaces (left and right) were located on the aft top stabilization struts. All ET/SRB interface attachment hardware was SRB-provided and consisted of a frangible bolt at each of the forward interfaces, and a shear pin at each of the aft strut/tank interfaces.[1456]

The two identical **ET/SRB forward thrust interfaces** consisted of permanently fixed, 5”-radius spherical seats machined from AMS-5629 corrosion-resistant stainless steel, and housed in large machined/forged 7050 aluminum alloy thrust fittings. Each of the thrust fittings weighed approximately 400 pounds. An SRB-provided frangible bolt was installed through each fitting. The thrust fittings also included provisions for attachment of the ET forward hoisting fittings.

The six **ET/SRB aft structural attachments** included upper top, upper bottom, and lower attachments, each with a left and a right. Each fitting, made from annealed titanium alloy (Ti6AL4V) castings, was attached to the ET major ring frame by shear pins and tension bolts. The upper fitting (top and bottom) measured 7” wide at the base, was 26” in length, and weighed approximately 75 pounds. It was attached to the ring frame with eight 3/4”-diameter and six 5/8”-diameter tension bolts, a 3-3/4”-diameter shear pin, and a shaped key. The lower fitting measured 6.5” wide at the base, was 19” in length, and weighed approximately 50 pounds. It was configured similar to the upper fitting, featuring a monoball interface with the SRB stabilization strut. Each of the 3.25”-diameter monoballs was manufactured of Inconel 718. Each lower fitting was attached to the aft major ring frame with twelve 3/4”-diameter tension bolts, a 2”-diameter shear pin, and a 1” x 0.5” platform key.[1457]

ET/orbiter Interfaces

ET/orbiter structural interfaces included two aft-positioned points located at the ET aft major ring frame and the LH2 tank longerons, as well as a forward attachment supported from the LH2 tank forward ring frame. The right aft support was a tripod, making it fixed. The other two

[1456] Lockheed Martin, *Handbook (SLWT),* 12-6.
[1457] Lockheed Martin, *Handbook (SLWT),* 12-9 through 12-11.

interfaces were bipods, with the left aft permitting lateral pivot motion and the forward allowing fore/aft motion. All ET/orbiter structural interface attachment hardware was orbiter-provided, and consisted of a frangible bolt and hex nut at the forward interface, and a frangible nut and tension bolt at each of the two aft points. Fluid and electrical interfaces were located at two aft umbilical assemblies, positioned adjacent to the two aft structural interfaces. These two umbilical assemblies, supported by brackets, consisted of clustered disconnects that mated with the ET fluid lines and electrical cables.[1458]

The **ET/orbiter Forward Attachment** hardware was a bipod weighing approximately 190 pounds. It was canted at 0.5 degrees forward when mated to the orbiter. The primary elements of the forward attachment were the identical left and right struts, the yoke fitting, the upper end and lower end fittings, and the spindle assembly. The latter, comprised of operating mechanisms within a titanium housing, provided attachment of the struts to the LH2 tank forward ring frame structure.[1459] The two hollow, aluminum struts measured 60” long and featured flanges on each end. The orbiter end of the left strut was attached to a yoke fitting that mated with the orbiter. The yoke fitting was a large machined titanium (Ti-6AL4V) casting that formed a 74 degree apex angle between the two struts, and which encased the orbiter-provided frangible bolt. The ET end of both struts was flanged identically to mate with the flanged lower end fitting. One end fitting was cast titanium and the other was Inconel 718.[1460]

The **ET/orbiter Aft Left Attachment** hardware consisted of a bipod structure. When the tank was unloaded, the bipod was canted 18 degrees inboard. The structure was attached to the orbiter by an orbiter-housed 2.5”-diameter tension bolt coupled with a frangible nut. The components of the aft left structure included a ball interface fitting, thrust strut, thrust strut end fitting, vertical strut, vertical strut end fitting, and vertical strut tank fitting. The ball interface fitting, made of forged 7050 aluminum alloy, weighed approximately 530 pounds. It joined the thrust and vertical struts. The thrust strut, also of 7050 aluminum alloy, was 120” long, with a 16.6” inner diameter. The thrust strut end fitting, made of 2219 aluminum, was connected to the LH2 tank left longeron by a 4”-diameter stainless steel shear pin inserted through a 5-3/4”-diameter stainless steel monoball. The approximately 60”-long vertical strut, of 7050 aluminum alloy, was connected to the ball interface fitting by a 4”-diameter steel shear pin. Sixteen 7/8”-diameter steel tension bolts connected the vertical strut to the 2219 aluminum strut end fitting. The vertical strut tank fitting was made of titanium (Ti-6AL4V) casting. Six 5/8”-diameter and four 7/8”-diameter steel bolts, and a 3-3/4”-diameter integral shear pin attached the fitting to the ring frame.[1461]

The **ET/orbiter Aft Right Attachment** was a tripod structure. It originated from two points on the aft major ring frame and from the forward end of the right longeron. The aluminum ball

---

[1458] Lockheed Martin, *Handbook (SLWT)*, 12-15.
[1459] Lockheed Martin, *Handbook (SLWT)*, 12-17.
[1460] Lockheed Martin, *Handbook (SLWT)*, 12-18.
[1461] Lockheed Martin, *Handbook (SLWT)*, 12-19, 12-20.

interface fitting, which weighed 530 pounds, was a near mirror image of the aft left fitting. The thrust strut-to-ball interface fitting, the thrust struts, and the vertical struts, also were near identical.[1462]

The **ET/orbiter Crossbeam** was a rectangular-shaped aluminum structure measuring 176" long. It was comprised of extruded channel sections and integral forgings welded together to form a single assembly. It was bolted to the right ball interface fitting by twenty-four 5/8"-diameter bolts. The right end of the crossbeam contained two bulkhead forgings that supported the LO2 feedline elbow; the left end contained two integral bulkhead forgings that provided the attachment for the LH2 feedline hinge brackets.[1463]

The ET, like the orbiter, had half of the 17" LH2 feedline disconnect that served as the structural support for an **umbilical assembly**. This assembly contained the 2" GH2 pressurization line disconnect, the 4" recirculation line disconnect, and pullaway ET/orbiter and orbiter/SRB electrical disconnects, all mounted in a single cluster plate. This plate was mechanically attached to the ET side of the interface.[1464] The right umbilical assembly was similar to the left assembly, except for the absence of the 4" fluid disconnect. With the ET mated to the orbiter, the disconnect halves were held together by 2-1/4"-diameter umbilical separation system bolts.

ET/Ground Facilities Interfaces

The ET intertank was equipped with fluid and electrical interfaces with the ground facility pressurization, vent and electrical systems. The umbilical system consisted of a hardline subassembly which terminated with a GUCA. The GUCA interfaced with the ET intertank carrier plate assembly (ETCA). Each of these carrier assemblies contained their respective sections of the disconnect component for the electrical or gas system. A pyrotechnic bolt attached the GUCA to the ETCA.[1465]

ET Process Flow

Throughout the SSP, all ETs were built, assembled, and acceptance tested by contractor Lockheed Martin Space Systems Company at NASA's MAF in New Orleans, Louisiana, then transported by barge to KSC for inspections, integration with the orbiter and SRBs, and launch. A summary of this process follows.

[1462] Lockheed Martin, *Handbook (SLWT)*, 12-21.
[1463] Lockheed Martin, *Handbook (SLWT)*, 12-22.
[1464] Lockheed Martin, *Handbook (SLWT)*, 12-24, 12-25.
[1465] Lockheed Martin, *Handbook (SLWT)*, 12-33, 12-34.

Manufacture and Assembly

According to Mark Bryant, vice president of the External Tank Program for Lockheed Martin Space Systems, the length of time required to build a tank was affected by several factors. Generally, the LWT used to take about two years to build, while the SLWT with the post-*Columbia* modifications and process controls took more than three years, start to finish.[1466]

Overview

The components of the ET were manufactured in Building 103 at MAF (Figure No. D-29). The process began with three concurrent manufacturing and assembly tracks – one for the LO2 tank, one for the intertank, and one for the LH2 tank. The LO2 tank and intertank were combined in Cell J of Building 114; the LH2 tank and the LO2 tank/intertank were assembled into the finished ET in Cell A of Building 110.[1467] Pressure testing of both propellant tanks was conducted in Building 110 and Structure 451. The ET components were cleaned and sprayed in Buildings 110, 114, and 131, and ablator was applied to elements of the ET in Building 318. Final approval and purchase of the ET by NASA took place in Building 420.[1468]

The manufacturing approach for the LO2 tank and LH2 tank assemblies entailed welding structural components into subassemblies such as domes, ogives and barrels, and then performing mechanical, propulsion, and electrical system installations at the subassembly level, to the extent possible. After completion of these processes, each tank was proof tested.[1469] Next, the LH2 tank was cleaned, iridited,[1470] primed and mated to the intertank to form the LO2/intertank stack and TPS application was completed. The LO2/intertank stack was joined to the LH2 tank in the vertical attitude and TPS closeout was performed. The mated ET assembly was then moved to the horizontal final assembly area for completion.[1471]

LO2 Tank Assembly

The LO2 ogive nose section was fabricated in two sections: forward and aft. The forward section consisted of eight gore panels and a forward ring fitting. The eight gores were welded in a vertical trim and weld fixture, first into four quarter panels, and then into two half-body assemblies, and finally into one assembly. The forward ring fitting was welded on next. All

---

[1466] Roy, "External Tank."
[1467] M. Todd Cleveland, *Evaluation of Resources Associated with the Space Shuttle Program, Michoud Assembly Facility, New Orleans, Louisiana* (survey report, MAF, TRC, May 2007), 19.
[1468] Cleveland, *Evaluation of Resources*, 19.
[1469] Proof testing was done to screen for critical flaws in the structure. It was performed on each LH2 tank and LO2 tank to demonstrate the strength of each tank pressure wall to 113 percent or greater of the limit load. Ryan, "Aerospace Problems."
[1470] Iridite is a chemical film which provides a barrier medium to prevent corrosion on aluminum surfaces, and enhances adhesion of paints and primers.
[1471] Lockheed Martin, *Handbook (SLWT)*, 14-2.

edges were custom-trimmed prior to welding. The aft ogive section consisted of twelve gore panels. The operations were the same as for the forward ogive, except there was no forward fitting. Four extruded segments comprised the T-frame which made the transition from ogive section to barrel section. These were welded together in a trim and weld fixture. The four pre-formed panels which formed the barrel section were welded together.[1472]

Fabrication of the LO2 dome began with the dome gore/gore welded assembly. The longitudinal abutting edges of the gore panels were saw-trimmed and welded. The completed quarter panel and the mating chord abutting edges were trimmed and welded. Next, the abutting edges of the quarter panel-chord assemblies were welded to produce a half dome body. The two half dome assemblies were brought together and the abutting edges trimmed and welded together to form a dome body. The completed dome body was then routed to the dome body/cap weld fixture for welding into a completed dome. The dome cap was welded to the dome body in a rim and weld fixture. Both the dome body and the dome cap were trimmed, then welded together on the dome body/cap weld fixture.[1473]

The LO2 forward slosh baffle individual ring segments and truss assemblies were joined, and then fabricated into a three-level baffle assembly. The LO2 tank major weld was accomplished in a horizontal rotational weld fixture. The major tank components were welded together from forward to aft. The slosh baffle was installed into the ogive/barrel assembly prior to welding on the aft dome. Next, the aft dome weld, which was the tank closeout weld, was made using an expanding mandrel. The completed LO2 tank was proof tested in the hydrostatic test facility using demineralized water to which a chromate corrosion resistant solution was added (Figure No. D-30). A vacuum was drawn on the aft dome to provide the required proof pressure gradient. After proof testing, the LO2 tank was X-rayed, then routed for cleaning and TPS application.[1474]

Intertank Assembly

The structural assembly of the intertank began with the splicing of the intermediate and main frame 90 degree segments into 180 degree segments. The 180 degree frame segments were loaded and aligned into a half section tack station along with the three stringer panels. Here, approximately 409 of the total panel to frame fasteners were installed. The panel to panel butt splices were tack fastened and the rollties were installed. The intertank -Z half section was positioned on the automatic riveter and the +Z half section was started on the tack section station. While on the automatic riveter, the remaining panel to frame butt splice fasteners were drilled and installed. The -Z half section was then moved to the finish/inspect station where the fasteners, installed by the automatic riveter, were inspected, and all systems substructure was installed. Operations were repeated for the +Z half section. Splice details and closure panels for the SRB beam were pre-drilled in a pre-assembly fixture. The pre-aligned SRB beam was placed

[1472] Lockheed Martin, *Handbook (SLWT)*, 14-2.
[1473] Lockheed Martin, *Handbook (SLWT)*, 14-2, 4-3.
[1474] Lockheed Martin, *Handbook (SLWT)*, 14-3.

in the assembly fixture. The half sections were then loaded in, and their frames spliced at the +Y axis. Thrust panels were then installed. Longeron tie ins and thrust panel butt straps and rollties were installed. The forward and aft interface flange holes patterns also were drilled. After removal of the intertank from the assembly fixture, it was placed in a fixture for installation of propulsion and electrical systems. The intertank was then moved to Cell G or H for SOFI application to the sidewalls using an automotive gun spray system. After completion of SOFI rim operations, the intertank was moved to Cell J for LO2 tank stacking.[1475]

LH2 Tank Assembly

The LH2 forward and aft domes were fabricated in the same manner as the LO2 dome. The LH2 aft barrel section was welded. The three LH2 forward barrel sections were welded in a horizontal barrel weld fixture (Figure No. D-31). The panels were sequentially loaded and welded. The three LH2 T-ring frames were welded in the same fixture used for the LO2 T-ring. The LH2 tank major weld was accomplished in a horizontal rotational weld fixture similar to that used for the LO2 tank. The LH2 tank assembly sequence began with the loading of the aft dome into the weld fixture followed by the loading of the aft barrel section. After the mating edges had been prepared, the circumferential weld was made. The remaining barrel sections and ring frames that comprised the LH2 tank were prepared and welded in like manner. The welded assembly, less the forward dome, was then removed from the fixture and loaded into another fixture where X-rays and mechanical installations were performed. The assembly was then moved to another fixture where the final circumferential weld of the LH2 tank was made between the forward dome and the forward barrel section. Welding of the forward dome to the barrel section completed the LH2 tank assembly (Figure No. D-32). The completed LH2 tank was then routed to proof test, which combined a pneumatic GN2 pressure test with a hydraulic local test. While the tank was pressurized, loads were applied to simulate the loads from the SRBs and the orbiter. Completion of the proof test was followed by a leak test, then transport to Building 103 for proof X-ray operations.[1476]

TPS Application

After completion of proof testing and X-rays, the LO2 tank was cleaned and iridited internally and cleaned externally. Internal installations were made, welds were iridited and external surfaces primed, and SOFI was then applied to the aft dome using an automated sprayer. The LO2 tank was then mated and spliced to the intertank, the LO2 feedline was mechanically hooked-up, the feedline brackets were installed, and SLA handpack operations were performed (Figure No. D-33). The LO2/intertank stack underwent an automated application of SOFI, and mechanical installations were performed. Closeout/trim of flange and cable tray brackets was completed and the LO2 stack was ready for mating to the LH2 tank.

[1475] Lockheed Martin, *Handbook (SLWT)*, 14-3.
[1476] Lockheed Martin, *Handbook (SLWT)*, 14-4.

After proof testing and X-ray, the LH2 tank was cleaned, primed, and covered with an application of TPS. The first steps were external cleaning, prime and mechanical installations. The LH2 tank was then internally cleaned and iridited. Internal installations in the aft dome were completed, followed by the application of SOFI to the barrel section areas and the forward dome. SLA panels were bonded to the apex aft dome area, and then SOFI was applied to the aft dome. Next, the LH2 tank was mated with the LO2 tank/intertank assembly (Figure No. D-34), and TPS closeout of the splice area was performed. SRB attachment fittings were installed and alignments were verified prior to final assembly, performed in Building 103. This entailed the installation of electrical and mechanical hardware, including feedline, cable tray, interface hardware, and electrical wiring, as well as ET/orbiter interface hardware. TPS closeouts followed.[1477]

Test and checkout, performed in Building 420, started with a wiring integrity test, followed by mechanical joint leak tests, subsystem testing, and finally, an All Systems Test which simulated the flight profile (Figure No. D-35). Pack and ship activities also were completed in Building 420. Next, the LO2 and LH2 tanks were purged with GN2, and pressurized to 6 psig with dry GN2 prior to shipment.[1478]

Transportation and Delivery

Each completed ET was loaded onto the covered barge *Pegasus* at MAF (Figure No. D-36), then towed to Gulfport, Mississippi, where retrieval ship *Liberty Star* or *Freedom Star* joined the barge to make the approximate 900 mile journey to KSC (Figure No. D-37).[1479] It typically took about seven to ten days for the tank to travel through the Mississippi River, out to and across the Gulf of Mexico, then up through the Straits of Florida to Cape Canaveral, through the port, up the Banana River, and on to the Barge Terminal Facility at KSC located near the VAB (Figure No. D-38).[1480]

At KSC, each ET was offloaded from the barge (Figure No. D-39) and moved atop a transporter to the transfer aisle of the VAB (Figure No. D-40). The ET was rotated to vertical (Figure No. D-41), and placed in a checkout cell for visual inspection by a team of engineers, technicians and quality inspectors. While in the checkout cell, the ground umbilical carrier plate was installed and the aft hardpoint TPS closeout was performed. Nitrogen, which filled both the LH2 and LO2 tanks, was replaced with helium, mainly to keep moisture out and to allow for pressure monitoring. Propulsion system leak checks and limited electrical checks were performed, as well as a pneumatics checkout to make sure the valves were functioning properly.[1481] The umbilicals

---

[1477] Lockheed Martin, *Handbook (SLWT),* 14-5.
[1478] Lockheed Martin, *Handbook (SLWT),* 14-5.
[1479] There were instances when a chartered ship was used to pull the barge instead of a SRB retrieval ship when the ships were engaged in other operations. Bartolone, interview.
[1480] Bartolone, interview.
[1481] Lockheed Martin, *Handbook (SLWT),* 3-3.

located on the bottom end of the ET, built by Boeing as matched sets to the orbiters, were balanced, adjusted, repaired (if necessary), and prepared for orbiter mate by a Boeing team.[1482] Normal processing in the check-out cell took about eighteen days.

After verification of ET integrity, the transport equipment and instrumentation were removed, and the ET was hoisted by a large overhead crane (Figure No. D-42) and moved to the VAB integration cell (High Bay 2 or 4) for storage prior to stacking. The ET was lifted out of the high bay via overhead crane and moved into High Bay 1 or 3 for mating.

Integration and Launch

After the SRBs were stacked on the MLP in VAB High Bay 1 or 3, the ET was lowered into position and mated to the SRBs (Figure No. D-43). The ET/SRB forward support fittings were attached, followed by mating and securing of the aft fittings. All ET/SRB interface system connections were made. Next, the orbiter was moved into the integration cell and attached to the ET at one forward attachment point and two aft points. The orbiter was rotated forward and jacked into final position for attachment to the ET bipod. Umbilicals between the ET and orbiter were connected.

Following the move of the complete Space Shuttle vehicle from the VAB to the launch pad, facility servicing lines were mated through the ET intertank carrier plate assembly. The facility LO2 and LH2 systems were purged, and both ET tanks were purged with helium to assure an inert atmosphere for propellant loading.[1483] At T-5 hours and 50 minutes, the launch processing system initiated the SSME LH2 chill-down sequence in preparation for LH2 loading.

Both propellants were loaded simultaneously, starting with a slow flow rate to precondition the lines, tanks, and engines. At the 2 percent level, the flow rates were increased to a maximum of 12,000 gallons per minute for LH2 and 5,000 gallons per minute for LO2 until 98 percent capacity was reached. The flow rate was reduced again to provide a topping flow rate to 100 percent capacity, followed by a still slower replenish rate to maintain 100 percent propellant levels. This flow continued until the automatic sequence started at T-9 minutes.[1484] Vapors from each propellant were vented during the loading and conditioning process.

The fuel system purge began at T-4 minutes. At T-2 minutes and 55 seconds the LO2 tank was pressurized to 221 psi, and almost one minute later, the LH2 tank was pressurized to 42 psi. At T-9.5 seconds, the engine chill-down sequence was complete. The main fuel valve and the main oxidizer valve in each engine were opened. Between the time of valve opening and MECO, LH2 and LO2 flowed out of the ET through the disconnect valves, and into the feedline manifolds, from where they were distributed to the engines.

[1482] Bartolone, interview.
[1483] Lockheed Martin, *Handbook (SLWT),* 3-4.
[1484] Lockheed Martin, *Handbook (SLWT),* 3-5.

The ET fed approximately 535,000 gallons of LO2 and LH2 propellants to the three SSMEs during the first 8.5 minutes of flight, at a rate of 1,035 gallons per second.[1485] The ET was jettisoned within ten to fifteen seconds after MECO, at an altitude of about 70 miles (Figure No. D-44). Separation of the ET from the orbiter was initiated by the firing of a pyrotechnic valve located in the nose cap that broke the attachment hardware links.[1486] Following separation, the residual LO2 contained in the tank was gasified, which imparted a tumbling action to the ET. Tumbling provided for better fragmentation and a more predictable area of impact. The ET broke up into fragments as it fell back to Earth. Almost the entire tank burned up during re-entry. Any debris that did not burn fell into a predetermined area of the Pacific or Indian Ocean.

[1485] Lockheed Martin, "Statistics and Comparisons."
[1486] NASA KSC, "Lightweight External Tank."

PART V. SOLID ROCKET BOOSTER/REUSABLE SOLID ROCKET MOTOR

Introduction

The twin solid rocket boosters (SRBs), designed as the primary propulsion element of the STS, provided the Space Shuttle with 80 percent of the liftoff thrust during the first two minutes of launch. They burned more than 2,200,000 pounds of propellant and produced 36 million horsepower.[1487] Each SRB booster was comprised of both motor and non-motor segments. The motor segments, referred to as the solid rocket motor (SRM), and later renamed "reusable solid rocket motor" (RSRM), contained the fuel to power the SRBs.[1488] The SRMs/RSRMs were the largest and only human-rated solid-propellant rocket motors ever flown, and the first designed for recovery and reuse. The major non-motor segments included the nose cap, frustum, and forward and aft skirts. These structural components contained the electronics to guide the SRBs during liftoff, ascent, and ET/SRB separation, and housed the parachutes, which slowed the descent of the reusable boosters into the Atlantic Ocean after their jettison from the spacecraft.

Historically, SRM/RSRM development followed a path separate from the non-motor SRB components. Throughout the SSP, Thiokol, of Promontory, Utah, was the sole fabricator and prime contractor for the SRM/RSRM.[1489] Thiokol supplied NASA with the propellant-loaded forward motor case segment, with the igniter/safe and arm (S&A) device installed; the two propellant-loaded center motor case segments; the propellant-loaded aft motor case segment, with the nozzle installed; the case stiffener rings; and the aft exit cone assembly with the severance system installed. Over 400 suppliers, located in thirty-seven states and Canada, provided metal components, seals, insulation, fabrics, paints, and adhesives. In addition, six companies supplied the major ingredients that comprised the RSRM propellant. These included American Pacific (AMPAC) in Cedar Rapids, Utah (ammonium perchlorate); Dow Chemical in Freeport, Texas (epoxy resin); Alcoa in Rockdale, Texas (aluminum powder); Toyal America in Naperville, Illinois (spherical aluminum powder); American Synthetic Rubber Company (ASRC) in Louisville, Kentucky (polybutadiene-acrylic acid-acrylonitrile terpolymer [PBAN]); and Elementis Pigments in Easton, Pennsylvania (iron oxide). For the final flight motors, Mitsubishi Argentine ingot replaced the aluminum powder provided by Alcoa, and the ammonium perchlorate was provided by HCL-Olin in Becancour, Quebec, Canada, and Niagara Falls, New York.

[1487] ATK, "RSRM Overview" (presentation materials, MSFC, Huntsville, AL, April 8, 2010), 5.
[1488] Following the *Challenger* accident, the SRMs were redesigned. Effective November 1, 1987, the new motor configuration became known as the Redesigned SRM (RSRM). By 1995, they were renamed Reusable SRM (still RSRM).
[1489] The Thiokol Chemical Company, founded in 1929, experienced several mergers and splits, resulting in a series of name changes, including Morton Thiokol Incorporated (1982), Thiokol Inc. (1989), Cordant Technologies (1998), AIC (Alcoa Industrial Components) Group (2000), Alliant Techsystems (ATK) Inc. (2001), ATK-Thiokol, and ATK Launch Systems Group (2006). The company will be referred to as "Thiokol" throughout this document.

The major non-motor SRB components originally were designed in-house by MSFC engineers, and SRB hardware was the responsibility of MSFC during the development phase.[1490] MSFC designed the structural components and a number of the subsystems, then contracted to have them fabricated. Beginning with the seventh SSP mission, STS-7, United Space Boosters, Inc. (USBI) of Sunnyvale, California, a wholly-owned subsidiary of United Technology Corporation, replaced MSFC as the prime contractor for the SRB until 1999, when USBI became part of USA.[1491] At KSC, USA was the prime contractor for the fabrication, assembly, and refurbishment of primary SRB non-motor segments and associated hardware. One set of flight-ready SRBs contained approximately 5,000 refurbished parts.[1492] The major suppliers for the SRB program were located in twelve states across the U.S. These providers included the following: McDonnell Douglas Corporation, California (aft skirt, forward skirt, frustum, and ET attach ring); Hamilton Sunstrand, Illinois (APU); ATK-Thiokol Propulsion, Utah and Chemical Systems Division, California (booster separation motor); Moog-Servoactuator, New York (fuel isolation valve); Aerojet General Corporation, Washington (gas generator); Parker Abex, Michigan (hydraulic pump); L3 S&N, New Jersey (integrated electronic assembly); L3 Cincinnati Electronic, Ohio (command receiver/decoder); Honeywell Inc. Space Systems, Arizona (modulator/demodulator); Oceaneering Space & Thermal, Texas and Hi-temp Insulation, California (thermal curtain); BST Systems, Connecticut (batteries); LaBarge, Inc., Missouri (cables); and Goodrich UPCO, Arizona and California, and Pacific Scientific, Arizona (ordnance).

Historical Overview

Early Booster Concept Studies

A number of different booster concepts were under consideration by NASA and the aerospace industry when President Nixon gave the go-ahead to proceed with the development of the STS. The alternative configurations included a recoverable, reusable unmanned booster; a manned, reusable, flyback booster; and an expendable booster (See Part I. Historical Context).

Concurrent with the Phase B Space Shuttle definition studies, on September 28, 1970, MSFC chose McDonnell Douglas to study an expendable second stage for a reusable shuttle booster. Shortly after, the contract was modified for a period of one year to allow for testing the structural components of its proposed shuttle booster. In mid-1971, Phase B shuttle definition contracts with North American Rockwell-General Dynamics and McDonnell Douglas-Martin Marietta, and study contracts with Grumman-Boeing and Lockheed were extended to consider the phased approach to shuttle design and the use of existing liquid or solid propulsion boosters as interim

[1490] Dunar and Waring, *Power to Explore*, 308.
[1491] T.A. Heppenheimer, *Development of the Space Shuttle 1972-1981*, 174.
[1492] United Technologies Corporation, "Solid Rocket Booster Fact Sheet," n.d., MSFC History Office, Huntsville.

Shuttle launch vehicles. The Martin Marietta engineers concluded that the Titan launch vehicle could be used as an interim expendable booster for the shuttle; Grumman-Boeing suggested that the Saturn IC could serve as an interim shuttle booster and that a winged Saturn reusable booster was feasible.

Near the end of 1971, NASA awarded contracts for feasibility studies of pressure-fed engines for a water-recoverable shuttle booster to TRW, Inc. and to the Aerojet General Corporation. In addition, four parallel contracts were awarded by NASA on January 27, 1972, to the Thiokol Chemical Corporation (Contract No. NAS8-28430), the Lockheed Propulsion Company (Contract No. NAS8-28429), the Aerojet Solid Propulsion Company (Contract No. NAS8-28428), and the United Technology Center, United Aircraft Corporation (Contract No. NAS8-28431). The purpose of these contracts was to study the practicality of using 120" and 156" solid motors as part of the shuttle booster package.[1493]

Following the evaluation of the final shuttle system definition study data, on March 15, 1972, NASA completed the configuration for the STS with the selection of a solid propellant booster over the development of a new liquid-fueled system. This decision was made primarily on the basis of lower development costs.[1494] The configuration chosen by NASA officials called for unmanned, recoverable, and reusable 156"-diameter twin boosters that, when fired in tandem with the Shuttle's main engines, would lift the vehicle into space. North American Rockwell, in conjunction with NASA, defined the booster elements. However, driven by the need to reduce the overall weight of the Shuttle stack, the baseline for the SRMs continued to change. Within about one year, the final specification was for a 142"-diameter booster.

On December 12-13, 1972, about 350 industry and government representatives visited MSFC for a review of the latest information regarding the SRB program. Roughly six months later, prior to the issuance of a RFP, MSFC presented the results of the shuttle studies to potential developers of the SRB/SRM.

SRM Contracts

In May 1973, NASA administrator James Fletcher declared that with the exception of the SRM, the SRB was to be designed in-house.[1495] Aerojet General Solid Propulsion Company, Lockheed, Thiokol, and United Technology Center were provided the RFP for design, development, and testing of the SRM on July 16, 1973; proposals were due on August 27. As result, on November 20, 1973, NASA selected the Thiokol Chemical Company/Wasatch Division for the six-year SRM contract. Lockheed, one of the unsuccessful proposers, filed a formal protest with the GAO in January 1974. While the GAO carried out its investigation, MSFC issued a series of short-

[1493] Ezell, *Databook Volume III*, 121-124, table 2-57.
[1494] Dunar and Waring, *Power to Explore*, 286.
[1495] Heppenheimer, *Development of the Space Shuttle*, 174.

term contracts to Thiokol "in an effort to minimize the cost of schedule impacts."[1496] Following the GAO's recommendation to either retain Thiokol or to reconsider its selection, on May 15, 1975, NASA opted to award Thiokol a letter contract for SRM design, development, testing and engineering for the period July 26, 1974, through June 30, 1980.[1497]

MSFC's original contract with Thiokol (Contract No. NAS8-304940, Schedule A) called for the manufacture, assembly, test, checkout, and delivery of twenty-one SRMs, including six flight sets (SRMs 1-6) and nine test motors (Development Motors [DM] 1-5 and Qualification Motors [QM] 1-4). Also included were support equipment, tooling and support parts, SRM systems integration support and special studies, and data and documentation for the SRM.[1498] The value at the end of the contract totaled $395.9 million. This initial contract was supplemented by Increment 2, Buy 1 (Schedule B) and Buy 2 (Schedule D) which collectively covered thirty-two flight sets (SRMs 7-25 and RSRMs 1-13; sixty-four motors); fourteen test motors (DM 8, Engineering Motor [EM] 9, QMs 6-8, Engineering Test Motor [ETM] 1, Production Verification Motor [PVM] 1, and Technical Evaluation Motor [TEM] 1-11); plus launch site and flight support. Schedules B and D, collectively valued at more than $2,500 million, extended the period of performance through the end of 1995.

Schedule C, valued at $241.2 million, covered the manufacture, assembly, test, checkout, and delivery of three filament wound case (FWC) motors (FWC 1-3) and three test motors (DM 6-7, and QM 5) during the period between 1982 and 1988. Production Buy 3 (Contract No. NAS8-38100) provided for the purchase of 142 motors, including sixty-seven flight sets (RSRM 14-80) and eight test motors (Flight Support Motors [FSM] 1-8). The period of performance for this contract, valued at $4,001.4 million, extended from March 2, 1989, through September 15, 2001. The final RSRM contract (Contract No. NAS8-97238), Production Buy 4, covered the purchase of seventy-five motors, including twenty-eight flight sets (RSRMs 81-88, 92-99, and 101-113), one Launch-on-Need (LON), fifteen test motors (FSMs 9-15 and 17, ETMs 2-3, FVMs 1-2, TEMs 12-13, and Production Rate Motors [PRM] 90A and 91B), plus launch site and flight support. Valued at $3,992.5 million, this contract covered the period between October 1, 1998, and September 30, 2010.

SRB Hardware and Assembly Contracts

In accordance with NASA's decision to make separate procurements for the motor and non-motor components of the booster, the RFP for the production of SRB structures lagged behind that for the motors. The initial RFP for the booster structures was not released to industry until January 17, 1975.[1499] MSFC issued additional RFPs and contracts during 1975 and 1976 for the

---

[1496] U.S. House, Committee on Science and Technology, Subcommittee on Space Science and Applications, *United States Civilian Space Programs, 1958-1978* (Washington, DC: U.S. Government Printing Office, 1981), 476.
[1497] Ezell, *Databook Volume III*, 121-124, table 2-57.
[1498] "Thiokol Awarded SRM Contract," *Marshall Star*, May 21, 1975, 4.
[1499] U.S. House, *United States Civilian Space Programs*, 456.

design, development, fabrication, testing, inspection, checkout, and delivery of other primary SRB hardware required for the first six Shuttle flights, including support equipment, tooling, and mockups. Separate contracts were awarded for the booster separation motors; APUs; electro-hydraulic servoactuators for the thrust vector control system; integrated electronic assemblies; pyrotechnic initiator controllers; and multiplexers/demultiplexers. MSFC also sought proposals and quotations from suppliers of dedicated signal conditioners and signal conditioner modules for both development and operational flight instrumentation, respectively; for flight pulse code modulation multiplexers and range safety receivers; as well as for wide band and strain gauge conditioners and frequency division multiplexers.[1500]

Proposals were received from six companies in response to the January 1975, RFP for the SRB Separation Motor Subsystem. As a result, a contract to supply the booster separation motors (BSMs) was awarded to the Chemical Systems Division of the United Technologies Corporation of Sunnyvale, California, on August 7, 1975. The contract specified a schedule for design (September 1975 to February 1976), development of twenty-three motors (September 1975 to July 1977), qualification testing of twenty-one motors (September 1977 to May 1978), fabrication of 119 flight motors (May to September 1978), and a staged delivery of 104 flight motors between September 1978 and February 1980.[1501]

The proposal for servoactuators called for the delivery of thirty-six actuator assemblies, including three development test units, three static firing support units, two prototype qualification units, two verification test units, and twenty-six flight units (including two spares) to support the first six flights. The period of performance for the $6.9 million contract was from March 1975 to March 1979.[1502] Moog, Inc. of Buffalo, New York, was the successful proposer.

In July 1975, MSFC awarded contracts totaling $538,835 to both the Aluminum Company of America of Pittsburgh, Pennsylvania, and the Weber Metals & Supply Co. of Paramount, California, for 356 aluminum hand forgings for the SRBs. Deliverables included forward skirt thrust post fittings, inboard aft skirt actuator support brackets, aft skirt splice fittings, and aft skirt holddown posts. The first items were specified for delivery by January 5, 1976; contract completion was dated June 4, 1976.[1503] Also in July of 1975, MSFC awarded a $5,768,612

[1500] "Signal Conditioner Modules Contract Awarded to Eldec," *Marshall Star*, December 24, 1975, 1; "SRB Multiplexer Quotations Sought From Industry," *Marshall Star*, May 24, 1976, 1; "Quotation Sought for Shuttle Range Safety Receivers," *Marshall Star*, July 28, 1976, 1; "MSFC Seeks Proposals on SRP Assembly," NASA MSFC News Release No. 76-52, March 25, 1976, Series: Space Shuttle Program, Program/Project Files, Drawer 27, Folder: SRB 1976, MSFC History Office, Huntsville, AL.

[1501] The six proposers included the Aerojet Solid Propulsion Company, California; Atlantic Research Corporation, Virginia; Hercules Inc., Maryland; Talley Industries, Arizona; Thiokol Corporation, Alabama; and United Technology Center, California. "Shuttle-Booster Separation Motor Source Evaluation Board," March 1975, Drawer 28, Folder: SRB Separation Motors 1974-1975, File: SRB Separation Motors, MSFC History Office, Huntsville.

[1502] No title, no date, Series: Space Shuttle Program, Program/Project Files, Drawer 27, Folder: General, MSFC History Office, Huntsville.

[1503] "Marshall Contracts for SRB Forgings," *Marshall Star*, July 16, 1975, 3.

contract to Sperry Flight Systems of Phoenix, Arizona, for the procurement of thirty-seven multiplexers/demultiplexers.[1504]

MSFC selected the McDonnell Douglas Astronautics Company West of Huntington Beach, California, on August 22, 1975, to provide SRB structures, including the aft skirts, frustums, nose caps, attachment rings, and struts to support the test program for the first six shuttle flights. The value of this contract (No. NAS8-31614) was approximately $14.8 million. Deliverables included fourteen aft skirts and attachment rings, sixteen sets of three struts to connect the SRB to the ET, thirteen cable tunnels, thirteen forward aft skirt assemblies, fourteen forward ordnance rings and attachments, thirteen frustum assemblies, twenty nose cap assemblies and thirteen data capsule assemblies.[1505]

In September 1975, Bendix Corporation's Guidance Systems Division of Teterboro, New Jersey, received the contract to provide the integrated electronic assemblies (IEAs) and associated test equipment for the first six Shuttle flights. The $4,409,000 contract called for thirty-three units, including flight articles, spares, and development and test versions.[1506] Delivery was scheduled to begin in 1976 and continue through April 1, 1979. At roughly the same time, the Denver Division of Martin Marietta Aerospace was awarded a $1.9 million contract for the fabrication, acceptance testing, and delivery of 322 pyrotechnic initiator controllers, which were housed in the IEAs of each booster. The period of performance extended from January 1, 1976, through December 1, 1978.[1507]

MSFC selected Martin Marietta, Denver Division as the prime contractor for the SRB decelerator (parachute) system, with Pioneer Parachute Company as the subcontractor. One other firm, Goodyear Aerospace Corporation of Akron, Ohio, had submitted a proposal. The $9 million initial procurement contract (Contract No. NAS8-32122), awarded on July 6, 1976, specified the delivery of parachute decelerator subsystems for use in recovering twelve SRBs for the first six flights. Work was scheduled to begin on July 6, 1976, and end December 1980.[1508] The first procurement of twenty-four large main parachutes was accomplished by supplemental agreement to Contract No. NAS8-32122 in June 1983. A second procurement under the original contract followed, for an additional thirteen main parachutes.[1509]

[1504] "Sperry Rand Gets Shuttle Contract," *Marshall Star*, July 23, 1975, 4.
[1505] "Firm Chosen to Produce Solid Booster Structures," *Marshall Star*, August 27, 1975, 1.
[1506] RFPs were provided to twenty-four interested sources, of which seven submitted proposals. NASA MSFC, "Bendix Selected for SRB Integrated Electronics Assemblies Contract," NASA News For Release: Release No. 75-106, June 4, 1975, Series: Space Shuttle Program, Program/Project Files, Drawer 27, Folder: SRB 1975, MSFC History Office, Huntsville; "Bendix is Awarded Booster Contract," *Marshall Star*, September 3, 1975, 2.
[1507] "Martin Receives $1.9 Million Shuttle Contract," *Marshall Star*, August 27, 1975, 1.
[1508] "Martin Selected for SRB Contract," *Marshall Star*, June 2, 1976, 1; NASA MSFC, "Contractor Selected for SRB Decelerator Subsystem Contract," News Release No. 76-96, May 28, 1976, Series: Space Shuttle Program, Program/Project Files, Drawer 27, Folder: SRB 1976, MSFC History Office, Huntsville; "Martin Marietta gets $9 Million SRB Contract," *Marshall Star*, July 28, 1976, 1.
[1509] Theodore T. Siomporas to W.R. Lucas, "Request for Approval of Authority to Enter into a Sole-Source Contract," memo dated March 20, 1984, Series: Space Shuttle Program, Program/Project Files, Drawer 27, Folder:

Since the SRB components were being procured separately, a stand-alone contract for SRB integration was needed.[1510] Therefore, the last major contract awarded by MSFC was for the SRB assembly, checkout, launch operations, and refurbishment in support of the first six flights, with options for additional flights.[1511] USBI was selected on December 17, 1976, as the SRB assembly contractor.[1512] Along with Boeing and McDonnell Douglas, USBI was one of three firms previously selected for negotiations leading to the award of a single contract for the assembly, checkout, launch operations, and refurbishment of the SRBs.[1513] The $122 million contract (Contract No. NAS8-32000) covered the period through March 1980, plus options for twenty-one flights, extending into 1982. USBI would be responsible to two separate NASA Centers: MSFC for the assembly, checkout, and refurbishment of the SRBs, and to KSC for final assembly, stacking, integrated checkout, launch operations and post-launch disassembly of the boosters.[1514] The original contract was amended in 1980 to extend USBI's services for STS-7 through STS-27.[1515]

Subsequently, Contract No. NAS8-36100, the SRB Third Procurement Buy, provided for USBI's support of twenty-one flights (STS-17 thru -35 and WTR-1 and -2[1516]), refurbishment of SRBs to support twenty-three flights (STS-15 thru -35 plus WTR-1 and -2), expendable and reusable hardware to support twenty-one builds (STS-28 thru -45 and WTR-1 thru -3), and long lead materials and parts to support eighteen builds (STS-46 thru STS-60 and WTR-4 thru -6).[1517] The contract also covered production for Booster Integration (BI)[1518]-009 through BI-020, refurbishment through BI-077, reusable flight hardware through BI-048, and reusable long lead

---

SRB 1984, MSFC History Office, Huntsville.

[1510] U.S. House, *United States Civilian Space Programs*, 476.

[1511] "MSFC Seeks Proposals on SRB Assembly;" "Proposals Sought for Last Major Shuttle Program Contract," *Marshall Star*, March 31, 1976, 1.

[1512] "NASA Awards Final Major Shuttle Program Contract," *Marshall Star*, January 5, 1977, 1, 2.

[1513] "Three Firms are Selected on Shuttle SRB Contract," *Marshall Star*, September 1, 1976, 1; NASA MSFC, "Three Firms Selected for Contract Negotiations on Shuttle Booster," NASA News, MSFC Release No. 76-159, September 1, 1976, Series: Space Shuttle Program, Program/Project Files, Drawer 27, Folder: SRB 1976, MSFC History Office, Huntsville.

[1514] Following a transition period which began six months prior to the seventh launch, all responsibilities previously vested with MSFC were transferred to KSC. SP/Manager to MSFC Manager, Shuttle Projects Office, "KSC Baseline Understanding for SRB Transition," memo dated November 7, 1975, Series: Space Shuttle Program, Program/Project Files, Drawer 27, Folder: SRB 1975, MSFC History Office, Huntsville.

[1515] "Amendment No. 1, Contract No. NAS8-32000," no date, Series: Space Shuttle Program, Program/Project Files, Drawer 27, Folder: SRB 1980, MSFC History Office, Huntsville.

[1516] WTR hardware was designated for launches from the Vandenberg Launch Site in California within the Western Test Range (WTR). The Western Test Range, which became the "Western Range" in 1991, was headquartered at Vandenberg AFB, California (30th Space Wing). The Range, consisting of a chain of shore and sea-based tracking sites, extended from the west coast of the U.S. to 90 degrees east longitude in the Indian Ocean, where it meets the Eastern Range. Shuttle launch and ascent was monitored by the Range. The Eastern Range, headquartered at Patrick AFB, Florida (45th Space Wing), supported missile and rocket launches from CCAFS and KSC.

[1517] Siomporas, "Sole-Source Contract."

[1518] Prior to integrated booster build-up, a Thiokol number was used to designate each SRM segment. After build-up, a Booster Integration (BI) number was used instead for each SRB set. Anthony (Tony) Bartolone, interview by Joan Deming and Patricia Slovinac, June 29, 2010, Kennedy Space Center, Florida.

material through BI-066. The value of this contract was $455.3 million, and the period of performance extended from September 26, 1983, through December 31, 1987. The succeeding Contract No. NAS8-36300, valued at an estimated $1,076 million, covered production for BI-021 through BI-084, refurbishment for BI-015 through BI-077, and reusable flight hardware through BI-084, as well as planned production for BI-085 through BI-154 and reusable flight hardware through BI-154. The period of performance, originally January 9, 1985 through September 30, 1999, was truncated, and the contract was consolidated into NAS9-20000/Space Flight Operations Contract, effective July 1, 1998.[1519]

SRM/RSRM Development and Test Programs

The shuttle SRMs were developed in three stages: the original baseline SRM, the succeeding high performance motor (HPM), and the redesigned/reusable solid rocket motor (RSRM). In addition to these successive design changes, NASA initiated projects to develop a lighter-weight motor case, the FWC, as well as an "advanced" solid rocket motor (ASRM). Both the FWC-SRM and the ASRM were designed, fabricated, and tested, but never used for flight.

The first SRMs were fabricated and tested in the late 1970s. Eight segments for the first two flight motors were shipped to KSC in the latter half of 1979 to support the first orbital flight. Three decades later, nearing the close of the SSP, the segments for the final flight motors, built to support the last five Shuttle flights (STS-131 through STS-135), were cast between March 2007 and October 2009.[1520] On May 27, 2010, the last RSRM segments, designated for the final program flight, arrived at KSC from Utah.

Baseline SRM

The original **SRM,** designed and fabricated by Thiokol, was tested and certified between July 1977 and February 1980, under the direction of MSFC. The SRM project full-scale test program was initiated in May 1976, with tests of the SRM nozzle flexible bearing. The objective of the test series, scheduled for completion in December 1976, was to evaluate the design and life expectancy of the flexible bearing by subjecting it to various stress levels and gimbal angles. A special test fixture was used to duplicate the motor chamber pressures and operational loads (stresses) expected to be felt by the bearing during flight. The results of the tests were evaluated in preparation for the manufacture and test of the complete nozzle, then scheduled for static testing as part of the first full-scale development motor, DM-1, in spring 1977.[1521]

[1519] NASA MSFC, Transition Project Office, "STS Stack Recordation Data Package," Tab C: MSFC Space Shuttle Element Contract History, Main Propulsion Elements, June 15, 2009.
[1520] ATK, "FSM-17 Pre-Brief" (presentation materials, MSFC, Huntsville, AL, April 8, 2010), 2.
[1521] "SRM Flex-Bearing Testing Entering Full-Scale Phase," *Marshall Star*, May 26, 1976, 2; NASA MSFC, "Testing Begins on Shuttle Motor Bearing," NASA MSFC News Release No. 76-95, May 26, 1976, Series: Space Shuttle Program, Program/Project Files, Drawer 27, Folder: SRB 1976, MSFC History Office, Huntsville.

The test firings of four development motors (DM-1 through DM-4) and three flight-type qualification motors (QM-1 through QM-3) were conducted at Thiokol's facility near Brigham City, Utah. The cumulative run time for the seven tests was under 1,000 seconds. In comparison, a total of 726 tests were required to certify the main engines.[1522]

The first production case segment for DM-1 was delivered from subcontractor Rohr Industries of Chula Vista, California, to Thiokol on September 27, 1976. Fabrication of DM-1 was completed in 1977.[1523] Static firing of this first development motor on July 18, 1977, indicated problems that needed correction (Figure No. E-1).[1524] Testing of DM-2 took place on January 18, 1978, and lasted for just over two minutes, roughly equivalent to the duration of the motor during actual launch. During this test, the motor nozzle was gimbaled (swiveled) during roughly half the time. While the test was successful, detailed examination of the internal insulation of DM-2 indicated an unexpected erosion pattern[1525] As a result, the inhibitor was redesigned, and the motor was reworked, reassembled, and successfully tested. The inhibitor design change was incorporated into all subsequent SRMs.[1526]

Because of the reworking of the propellant inhibitor, the static firing of DM-3 was delayed for five months. DM-3, designed as the first SRM in flight configuration, was tested on October 19, 1978. The development motor contained the first flight-type nozzle TVC hydraulic actuation system to move the motor nozzle.[1527] Also, a linear-shaped explosive charge designed to sever the aft exit cone of the nozzle was in place for the first time throughout the test.

The succeeding DM-4 test also was delayed, due to problems with two motor segments. One segment required replacement because of an excessive number of propellant voids. This finding later led to improvements in tooling and process techniques for the motor casings. The second segment (DM-4 aft segment) had been seriously damaged on December 2, 1978, during a breakover operation at the large motor casting pits at Thiokol's Wasatch Division plant. The damage was discovered after the segment was removed from the breakover fixture, a hydraulically-operated device used to rotate the motor case segment from vertical to horizontal. Following an investigation, it was determined that unclear procedures in how to operate the fixture contributed to the cause of the accident. Recommendations included redesign of the breakover fixture with adequate operational margins, and a revision of the procedures for using

---

[1522] Jenkins, *Space Shuttle*.
[1523] NASA MSFC, "First SRB Motor Case Segment Delivered," NASA News, MSFC Release No. 76-173, September 29, 1976, Series: Space Shuttle Program, Program/Project Files, Drawer 27, Folder: General, MSFC History Office, Huntsville.
[1524] "First Solid Rocket Motor Firing Said Near Perfect," *Marshall Star*, July 6, 1977, 1.
[1525] "SRM Passes Second Test Successfully," *Marshall Star*, January 25, 1978, 1.
[1526] "Statement of James M. Stone, Group Vice President, Government Systems, Thiokol Corporation before the Subcommittee on Space Science and Application of the Committee on Science and Technology, U.S. House of Representatives," January 28, 1979, Series: Space Shuttle Program, Program/Project Files, Drawer 26, Folder: January – July 1979, MSFC History Office, Huntsville.
[1527] "Third Static Test Set for Solid Rocket Motor," *Marshall Star*, October 18, 1978, 1, 2; "Third Solid Rocket Motor Test Firing Is Successful," *Marshall Star*, October 25, 1978, 2.

it.[1528] Test firing of DM-4 on February 17, 1979, marked the successful end of the development series and paved the way for qualification firings later in the year.[1529]

In a January 28, 1979, statement before the U.S. House Subcommittee on Space Science and Application, Thiokol Corporation's Group Vice President for Government Systems, James M. Stone, reported that the SRM project was near the end of a peak period of development activity. Stone noted that the last motor had entered the initial stages of manufacture, and only two qualification motors remained to be fired. Testing of a structural test article in early fiscal year 1978 confirmed the ability of the motor structure to withstand design loads (external forces). "It is important to note that . . . shipping, handling and assembly operations at Thiokol, MSFC and KSC have verified the design concepts, the equipment for transportation and handling, and the vehicle interface for the solid rocket motor," Stone concluded.[1530]

Between June 1979 and February 1980, qualification motors QM-1, QM-2, and QM-3 were fired in flight configuration (Figure No. E-2). This series served as the acceptance testing of the SRM. The 122-second static firing of QM-1, conducted on June 15, 1979, proved the ablative safety of the motor nozzle. During the test firing, the nozzle was gimbaled to simulate control properties during a launch.[1531] Two months later, the second SRM qualification test achieved a maximum thrust of 3.1 million pounds, and accomplished all objectives.[1532] The final static test, QM-3, was successfully accomplished on February 14, 1980.[1533] The baseline SRM was flown on STS-1 through STS-7.

High Performance Motor

The HPM featured a number of enhancements, compared with the baseline SRM. These included a modified propellant grain pattern, reduced nozzle throat diameter, increased nozzle expansion ratio, and increased chamber pressure. Collectively, as the result of these changes, an additional 3,000 pounds of payload was made possible.[1534] The maiden flight of the HPM was preceded by two static tests, HPM DM-5 in 1982, and HPM QM-4 in early 1983. The DM-5 static test had been scheduled for September 14, 1982, but was delayed due to a joint leak discovered during preliminary checkout. The HPM debuted as the new baseline motor in August 1983 with STS-8.

[1528] Thiokol Wasatch Division, "Summary of Board Investigation Report," December 2, 1978, Series: Space Shuttle Program, Program/Project Files, Drawer 27, Folder: SRB 1976, MSFC History Office, Huntsville.
[1529] "Final SRM Development Firing Slated., *Marshall Star*, February 14, 1979, 1; "Final Development Test Firing of SRM is Conducted Saturday," *Marshall Star*, February 21, 1979, 1.
[1530] "Statement of James M. Stone."
[1531] "First Qualification Firing of SRB Scheduled Today," *Marshall Star*, June 13, 1979, 1.
[1532] "Second SRM Qualification Test Passed," *Marshall Star*, October 3, 1979, 1, 4.
[1533] "Solid Rocket Passes Final Static Firing," *Marshall Star*, February 20, 1980, 1, 2.
[1534] ATK, "FSM-17 Pre-Brief," 8.

Redesigned/Reusable SRM

In the aftermath of the *Challenger* accident, the thirteen-member Rogers Commission concluded that the loss of the spacecraft was caused by a failure in the joint between the two lower segments of the right SRM. The specific failure was the destruction of the seals that were intended to prevent hot gases from leaking through the joint during the propellant burn of the rocket motor. According to Royce Mitchell, NASA's post-*Challenger* RSRM project manager, there was putty in the place of what eventually became the J-seal and the sealed insulation. "As the two segments that were being mated were brought together . . . it was impossible to avoid trapping air between the joints as you brought those two segments together . . . Over time this air would work its way to the surface and leave what was called a "blowhole." A blowhole in the putty let the flames impinge on one part of the O-ring. When the flame had pushed its way through the putty, as the motor continued to supply pressure, hot gas started filling up the circular tunnel in that joint. The jet of hot gas that was hitting the O-ring did not stop. As more and more gas tried to fill the circular tunnel, burn through of the O-rings resulted.[1535]

John Thomas, who led NASA's SRM redesign team, believed that there were three contributing causes to the *Challenger* accident. In addition to the faulty design of the field joint, the cold temperature on the day of the launch did not permit the sealing O-rings to be resilient enough to follow the opening of the joint. Thirdly, failure of the insulation that keeps the 6,000 degree F temperature from burning the metal and the seals contributed to the breaching of the joint by hot gas.[1536]

On June 13, 1986, President Reagan directed NASA to implement the recommendations of the Rogers Commission. A redesign team was established which included participation from MSFC, Thiokol, other NASA centers, contractors, and experts from outside NASA.[1537] Design changes were recommended for a number of areas, including the field, factory, and case-to-nozzle joints; the nozzle; the local propellant grain shape; and the ignition system. Changes to the ground support equipment also were recommended.

Initially, the NASA design team and a team from Thiokol worked independently to reconfigure the field joint. By the end of 1986, the two teams joined together at the Thiokol plant site in Promontory, Utah, to derive a final design. A fundamental challenge, according to John Thomas, was how to seal the joint at the insulation to keep the joint from opening when the motor was pressurized.[1538] If it did not open, the O-rings would stay in place. A related objective was to provide the ability to leak-check the O-rings in the direction that they would be sealing.

[1535] Mitchell, interview.
[1536] John Thomas, interview by Jennifer Ross-Nazzal, *NASA STS Recordation Oral History Project*, June 29, 2010, http://www.jsc.nasa.gov/history/oral_histories/sts-r/ThomasJW/ThomasJW_6-29-10.htm.
[1537] NASA, *NSTS Shuttle Reference Manual*, 1988, http://science.ksc.nasa.gov/shuttle/technology/sts-newsref/sts_asm.html.
[1538] Thomas, interview.

Each SRM had three field joints, which marked the locations where the four primary motor segments were fitted together in a tang-to-clevis fashion (cf., tongue-and-groove joint). In the RSRM field joint, the modified tang, known as the "capture feature," served to dramatically reduce joint deflection and rotation, both of which played a role in the loss of the *Challenger*. "Machined into the capture feature is a groove designed to hold an additional O-ring in place. The capture feature O-ring functions as a thermal barrier should the superheated gases of ignition reach it."[1539] The internal insulation configuration also was redesigned, which included adhesive bonding of the tang and clevis insulation surfaces. In addition, a J-shaped relief flap was designed into the tang-side insulation to assure an even tighter fit. This relief flap put pressure to work in preventing hot gases from reaching the motor's metal components.

Redesign also entailed lengthening of the 177 joint pins spaced around the field joint, and the addition of customized pin retainer shims to enhance fit. Other new features included a leak test port in front of the primary O-ring, joint heaters so the O-rings would not get cold if launched at below 50-degree F temperatures, as well as weather seals. "With the combination of the capture feature and the J-seal insulation and the method of being able to leak-check and the heaters to maintain the temperature of the joint, we successfully overcame the cause of the accident," John Thomas reported.[1540]

Changes to the factory joint included an increase in the insulation thickness, and the addition of larger pins. The retainer band was reconfigured, and a new weather seal was added. The O-ring and O-ring groove size were changed, consistent with the field joint modification. The motor propellant forward transition region was recontoured to reduce the stress fields between the star and cylindrical portions of the propellant grain. Modifications to the ignition system included thickening of the aft end of the igniter steel case, which contained the igniter nozzle insert. This was done to eliminate a localized weakness. Also, the igniter internal case insulation was tapered to improve the manufacturing process.

The RSRM also featured modifications to the case-to-nozzle joint that affixed the nozzle to the aft motor segment; the factory joints, which were put together before the motor was cast with propellant; and the igniter joint. To improve both the performance and strength of the case-to-nozzle joint, changes were made to the ply angles of the nozzle's nose inlet and throat rings, the cowl and outer boot ring, as well as the aft exit cone ablative liner. Redundant and verifiable seals were added to the nozzle's internal joints. Up through *Challenger's* final mission, each of the five different nozzle joints had a single O-ring as a seal. The RSRM included two O-rings at each nozzle joint. To reduce case rotation, 100 radial bolts were added, and insulation surfaces were adhesively bonded, eliminating the need for putty filler. A third O-ring, referred to as a wiper O-ring, was incorporated into the RSRM design for additional thermal protection.[1541]

[1539] Morton Thiokol, Inc., "Thirty-Two Months to Discovery" [1986], Box 1986H, MSFC History Office, Huntsville.
[1540] Thomas, interview.
[1541] Morton Thiokol, "Thirty-Two Months."

Other modifications included redesign of the attachment ring where the SRBs were connected to the ET. The ring was changed from a C-form, which encircled the motor case 270 degrees, to a complete 360-degree circle. This alteration was made following analyses indicating areas of distress in some of the fasteners, attributed to the stresses encountered during water impact.[1542] Also, detection of an anomaly in a critical weld between the hold-down post and skin of the aft skirt resulted in the addition of reinforcement brackets and fittings to the aft skirt ring. Changes to the attachment ring and reinforcement brackets added about 450 pounds of weight to each SRB.

In accordance with the Rogers Commission's recommendations, GSE was redesigned to meet a number of objectives:

- To minimize the case distortion during handling at the launch site;
- To improve the segment tang and clevis joint measurement system for more accurate reading of case diameters to facilitate stacking;
- To minimize the risk of O-ring damage during joint mating; and
- To improve the leak testing of the igniter, case, and nozzle field joints.[1543]

The Rogers Commission recommended that the tests to certify the new RSRM design be configured to duplicate the full range of operating conditions, including temperature. Full consideration of testing in a vertical attitude was recommended.[1544] However, after intensive study, NASA selected the horizontal test attitude for the RSRM because it was "the most demanding test of the redesigned joint for pressure and flight-induced loads and thus best satisfies the Commission's intent."[1545]

Royce Mitchell believed that "the most important part of the redesign effort was the many many tests that we ran."[1546] Further, "as different designs were proposed, it was always the test that was the ultimate referee for choosing the evaluation of this redesign."[1547] NASA conducted laboratory and extensive component tests, full segment environmental simulation tests (with loads applied), and full-scale static test firings to verify and certify the RSRM for flight. For the first time, the motor was tested at low temperatures (near 30-35 degrees F) to demonstrate that it could operate properly under these conditions. In addition, NASA deliberately introduced flaws

---

[1542] NASA, "SRB Overview," 2002.
[1543] NASA MSFC, *Solid Rocket Motor Redesign*, NASA Fact Sheet (Huntsville, AL: George C. Marshall Space Flight Center, July 1988), MSFC History Office, Hunstville; NASA, *NSTS Shuttle Reference Manual*.
[1544] Historically, the motors were tested in a horizontal position, and because of its advantages, horizontal testing was continued. Important considerations favoring testing in the horizontal position included flexing (sagging) of the motor which approximated the bending of the stack at the launch pad at ignition, as well as the greater efficiency in measuring thrust and simulating loads. Mitchell, interview.
[1545] NASA Headquarters, "NASA Selects Horizontal Configuration for Joint Test," Release No.: 86-139, October 2, 1986, Folder RA01 SRM Redesign-J. Thomas, Drawer 28, MSFC History Office, Huntsville.
[1546] Mitchell, interview.
[1547] Mitchell, interview.

to demonstrate satisfactory performance. This approach, advocated by NASA's former SSME Project Manager J.R. Thompson, had been successfully applied during the engine test program. Thus, NASA "actually introduced the flaws in the re-certification of the joint that failed during the *Challenger* mission," which included cutting the O-rings.[1548]

To meet the goal of a 1988 RTF launch schedule, both unique test facilities and full-scale test articles were built.[1549] For example, a field joint test article was constructed at MSFC that included two full-scale segments of a motor with a forward dome, aft dome, and a nozzle simulator. Differing amounts of propellant were used to simulate what the joint looked like as the pressure built up at ignition on the pad.[1550]

Six full-scale, full-duration static motor tests were conducted between May 27, 1987, and August 18, 1988, prior to the STS-26 RTF mission in September 1988. This RSRM test program was initiated on May 27, 1987, with static testing of ETM-1A. Test firing of DM-8 on August 30, 1987, was designed to evaluate the performance of the capture feature and the redesigned case-to-nozzle joint (Figure No. E-3). Four months later, on December 23, 1987, DM-9 was tested to further study the performance of major redesign features. Static testing of QM-6 on April 20, 1988, was the first full-scale/full-duration motor to qualify major features of the RSRM. Successful test firing of QM-7 followed on June 14, 1988.[1551] The final test of the series was of PVM-1 on August 18, 1988. This "J-leg and Capture Feature O-ring Flaws Test" featured flaws deliberately machined into the test motor to provide initial full-scale margin testing of the redesigned RSRM joints.[1552]

Full-scale, short-duration motor tests, as well as structural tests, also were conducted to evaluate the redesigned motor.[1553] Short duration meant that pieces of propellant were carefully sized and located to generate the heat and pressure to pressurize the case without going into a full-scale full-duration firing.[1554] The full-scale, short-duration motor test series included a total of twenty-two tests. Among these were seven Joint Environment Simulator tests completed between August 14, 1986, and July 28, 1988, to evaluate field joint hardware, insulation, and seal performance. Thiokol's Dr. Joseph E. Pelham designed a joint environmental simulator for the case-to-nozzle joint, and nine Nozzle Joint Environment Simulator tests were performed between February 8, 1987, and August 14, 1988. From October 3, 1987, to September 1, 1988, six Transient Pressure Test Article tests were conducted at MSFC to evaluate both field joint and case-to-nozzle joint performance. In addition, two structural tests were performed on December 18, 1987, and April 1, 1988, to evaluate the structural margins of the redesigned hardware.

[1548] Thompson, interview.
[1549] "SRM Redesign – J. Thomas," 1986, Drawer 27, Folder: RA01, MSFC History Office, Huntsville.
[1550] Thomas, interview.
[1551] Static testing of QM-7 marked the first use of Thiokol's new T-97 test stand.
[1552] ATK, "FSM-17 Pre-Brief," 12.
[1553] Morton Thiokol, Inc., "Thirty-Two Months."
[1554] Mitchell, interview.

Overall, NASA's SSP spent about $10 million per day, or roughly $4 billion per year, on redesign of the SRM, and virtually every element of the motor saw some changes.[1555] While NASA funded initiatives to replace the RSRM (see ASRM), such projects ultimately led nowhere. The RSRM designed by Thiokol in the aftermath of the *Challenger* tragedy was the motor that flew on all missions through the end of the SSP.

Filament Wound Case SRM

Prior to the *Challenger* accident and the development of the RSRM, which followed, NASA planned to launch to polar orbit from Vandenberg AFB, beginning in 1986. To offset the needed increase in payload capability, NASA looked for ways to reduce the total weight of the SRBs. Towards this goal, Thiokol proposed a composite material of plastic reinforced with graphite fibers as a replacement for the cylindrical steel sections of the SRM case. Compared with the metal cases, the graphite-epoxy FWC reduced the case weight by approximately 28,000 pounds. As a result, the payload capacity of the Shuttle would be increased by about 5,000 to 6,000 pounds.[1556] The graphite case segments were fabricated in Clearfield, Utah, by the Hercules Aerospace Company, a subcontractor to Thiokol. Following manufacture, the cases were shipped to the Thiokol plant for attachment of the steel end-rings, the domes on the forward and aft segments, and the ET attachment section on the aft segment. Thiokol also installed the rubber insulation, polymer lining, and propellant. Three test motors were fabricated, as well as segments to equip two complete sets of flight motors, plus most of a third set.[1557]

The static test program for the FWC-SRM included the firing of two development motors, DM-6 and DM-7, and one qualification motor, QM-5. DM-6, static fired on October 25, 1984, contained two design features that Thiokol believed would improve the field joint O-ring performance and help overcome a nozzle erosion problem identified after STS-8. The FWC-SRM field joints included a metal capture lip on the tang side that made it easier for the O-rings to maintain a seal during pressurization.[1558] To eliminate the erosion problem on the nozzle, the angle at which the carbon-cloth-phenolic tape was placed on the mandrel (spindle) was changed. DM-7 was tested on May 9, 1985. All the elements new to the FWC-SRM performed as expected, and the nozzle and field joints were in excellent condition after the tests.

The first FWC-SRM segments arrived at Vandenberg on May 30, 1985; all of the first flight set had arrived by mid-July.[1559] In January 1986, the FWC-SRM was stacked on the Vandenberg launch pad in preparation for the first west coast launch of the SSP. However, following the *Challenger* accident, the FWC project was ended. The test firing of qualification motor QM-5,

---

[1555] Mitchell, interview.
[1556] Allan J. McDonald, with James R. Hansen, *Truth, Lies, and O-Rings* (Gainesville, Florida: University Press of Florida, 2009), 29; NASA MSFC, *Lightweight Booster*, NASA Fact Sheet (Huntsville, AL: George C. Marshall Space Flight Center, no date), MSFC History Office, Huntsville.
[1557] Jenkins, *Space Shuttle*, 432.
[1558] McDonald and Hansen, *O-Rings*, 31.
[1559] Jenkins, *Space Shuttle*, 432.

scheduled for February 1986, was cancelled.[1560] The segments remained in storage at Vandenberg until mid-1988, when they were returned to Thiokol in Utah. Use of the FWC-SRM was briefly reexamined in 1994, after cancellation of the ASRM project, but was rejected.[1561]

Advanced Solid Rocket Motor Program

In the wake of the *Challenger* disaster, the single-source contractor and production site for the SRM was raised as an issue of concern.[1562] Concurrent with the SRM redesign efforts, in September 1986, NASA MSFC awarded ninety-day, $500,000 contracts to study new "advanced" SRM designs to five aerospace firms: Aerojet Strategic Propulsion Company of Sacramento, California; Atlantic Research Corporation of Alexandria, Virginia; Hercules Aerospace Company of Salt Lake City, Utah; Morton Thiokol, Inc. of Brigham City, Utah; and United Technologies Chemical Systems Division of San Jose, California.[1563]

NASA administrator James Fletcher decided to move forward with "Phase B" design and definition studies, and on June 3, 1987, MSFC released the RFP for the ASRM study contract. All five companies that had participated in the earlier studies submitted proposals, and all five were awarded nine-month contracts. The early concepts included both a segmented motor design and a joint-free monolithic design.[1564] Based on the results of the "Phase B" studies, NASA released the RFP for the ASRM contract on August 22, 1988. The ASRM development and test program was expected to take about six years. NASA planned to phase in the new motor during the mid-1990s, with the first flight slated for 1996. Four of the five companies submitted proposals as two teams, Hercules-Atlantic and Lockheed-Aerojet.[1565] Thiokol opted to "no bid" the ASRM contract and continued its work on SRM redesign. However, the company agreed to support the Lockheed-Aerojet team, if selected, as a subcontractor for the ASRM nozzle assembly.[1566]

From the perspective of Allan J. McDonald, Thiokol's SRM project director at the time of the *Challenger* accident, "NASA had sold the ASRM program . . . to Congress on the basis that the new motor would have higher reliability at lower cost than the RSRM." He, however, regarded

---

[1560] An exhaustive investigation by a Senate subcommittee resulted in the cancellation of NASA's plans to activate the Vandenberg Launch Site (VLS) in California. The facilities were ordered mothballed in 1988, and the SSP at VLS was officially terminated in December 1989.
[1561] Jenkins, *Space Shuttle*, 432.
[1562] Harry F. Schramm and Kenneth W. Sullivan, "An Evaluation of the Total Quality Management Implementation Strategy for the Advanced Solid Rocket Motor Project at NASA's Marshall Space Flight Center," NASA, MSFC, NASA Technical Memorandum, NASA TM-103533, May 1991, 4, http://ntrs.nasa.gov/archive/nasa/casi.ntrs.nasa.gov/19910015285_1991015285.pdf.
[1563] "NASA awards contracts for solid rocket booster designs," *Florida Today*, September 7, 1986: 9, Microfiche collection, MSFC History Office, Huntsville.
[1564] "Marshall Invites Industry to Study Advanced Booster," *Spaceport News*, June 19, 1987, 7.
[1565] Jenkins, *Space Shuttle*, 461-462.
[1566] McDonald and Hansen, *O-Rings*, 489.

the ASRM as a political "pork barrel project," being conducted "to punish Thiokol" and bring jobs into the district of Jamie Whitten, Chairman of the House Appropriations Committee.[1567]

NASA selected the Lockheed-Aerojet team, and preliminary design efforts started in December 1989, under interim contracts between NASA and Lockheed. On May 11, 1990, MSFC formally awarded a five-year contract (Contract No. NAS8-37800) to Lockheed Missiles and Space Company, Inc. and their subcontractor, Aerojet Space Booster Company. The basic contract, valued at $971 million, called for production of twenty new motors.[1568] Lockheed also was chosen to develop NASA's proposed government owned – contractor operated facility at Yellow Creek. This former Tennessee Valley Authority nuclear power plant located near Iuka, Mississippi, would house the ASRM manufacturing operations.

Physically, the major difference between the ASRM and the RSRM was in the number of motor case segments – three in the ASRM and four in the RSRM. All factory joints, the ET attach ring, and more than 2,000 individual parts were eliminated in the ASRM.[1569] The "advanced" motor also featured an improved igniter and nozzle design and a new propellant grain design. In addition to motor design enhancements, improvements were planned for the ASRM manufacturing process. These included the use of more automation in the application of insulation, and a continuous casting process where the propellant was mixed close to the casting pit and then piped to the motor.[1570]

The first ASRM-related test was conducted at MSFC on April 10, 1991, with more tests performed through 1992.[1571] In March 1992, John S. Chapman and Michael B. Nix of NASA's MSFC, presented a paper at the AIAA Space Programs and Technologies Conference in which they projected a 1995 delivery for the first set of flight ASRMs, and first launch in early 1997.[1572] In reality, as a way to trim its budget, NASA's FY 1993 request to Congress contained no funding for ASRM development or production. The ASRM program was continued for one more year at the FY 1992 level. In consideration of projected delays in the design of the Space Station, which the ASRM was intended to support, in July 1993, the U.S. House voted to end the ASRM program.[1573] Subsequently, on October 27, 1993, the ASRM contract was officially terminated "for convenience of the Government."

[1567] McDonald and Hansen, *O-Rings*, 489, 552.
[1568] NASA, "NASA Awards Contract to Develop Advanced Solid Rocket Motor," Release: 90-68, May 14, 1990, http://www.nasa.gov/home/hqnews/1990/90-068.txt.
[1569] Jenkins, *Space Shuttle*, 462.
[1570] Thomas, interview; Mitchell, interview.
[1571] Jenkins, *Space Shuttle*, 464.
[1572] John S. Chapman and Michael B. Nix, "Overview of the Manufacturing Sequence of the Advanced Solid Rocket Motor," Paper presented at the AIAA Space Programs and Technologies Conference, March 24-27, 1992, 10, Box 1992A, MSFC History Office, Huntsville.
[1573] Jenkins, *Space Shuttle*, 464.

Flight Support Motor Test Program

Beginning in 1987, Thiokol initiated a FSM test program to annually evaluate, validate, and qualify new improvements or changes to the motor. After testing, the test article components, including the metal case segments and nozzle components, were refurbished for reuse. Between August 15, 1990, and February 25, 2010, a total of sixteen full-scale FSMs were tested, typically one per year.[1574] For example, the June 10, 2004, full-scale static firing helped to evaluate modifications to the shape of the propellant grain in the forward motor segment. This modification was designed to increase propellant strength and to enhance safety by decreasing the risk of cracks in the propellant.[1575] On February 25, 2010, FSM-17 was tested to obtain full-scale performance data to validate the integrity of the final flight motors (RSRM-110, -111, -112, -113, and -114) to support the last five Shuttle flights of the program (STS-131 through STS-135). This was Thiokol's 52nd and final static test firing of a RSRM (Figure No. E-4). Among the forty-one test objectives, the FSM-17 static test was performed to demonstrate the performance of asbestos-filled nitrile butadiene rubber (ASNBR) insulation made with a new primary cure accelerator; the performance of propellant fabricated with new polished piping; and the performance of propellant fabricated with materials procured from new sources.[1576]

The FSM tests, noted David Beaman, NASA's RSRM Project Manager, "have built a base of engineering knowledge that continued engineering development of the reusable solid rocket motor system and the continued safe and successful launch of space shuttles. They have provided an engineering model and lessons learned for additional applications in future launch systems."[1577]

RSRM Improvements and Changes: ca. 1990 – 2006

Improvements to the design, materials, and manufacturing processes in the RSRMs were on-going throughout the SSP, and ground testing was a key part of certifying a change. However, according to Jody A. Singer, Deputy Manager of the MSFC Propulsion Office and SRM/RSRM Manager, unlike the SSMEs, each new motor did not get tested before flight, or have a "green-run."[1578]

[1574] FSM-16 was not fabricated and tested. Testing of FSM-17 followed that of FSM-15. ATK, "FSM-17 Space Shuttle Reusable Solid Rocket Motor Static Test, February 25, 2010," (presentation materials, MSFC, Huntsville, AL, April 8, 2010).
[1575] NASA MSFC, "Successful test leads way for safer Shuttle Solid Rocket Motor," 2004, http://www.nasa.gov/centers/marshall/news/news/releases/2004/04-163.html.
[1576] ATK, "FSM-17 Static Test."
[1577] NASA, "NASA's Space Shuttle Program Successfully Conducts Final Motor Test in Utah," http://www.nasa.gov/mission_pages/shuttle/behindscenes/final_motor_test. html.
[1578] Jody A. Singer, interview by Jennifer Ross-Nazzal, *NASA STS Recordation Oral History Project*, June 21, 2010, http://www.jsc.nasa.gov/history/oral_histories/sts-r/SingerJA/SingerJA_7-21-10.htm.

In general, between 1990 and 2006, the igniter joints were redesigned, and changes were made to the nozzle structural adhesive, high-fired carbon phenolics, propellant fin, and O-rings. To verify the new materials and manufacturing processes, static test firings of ETMs were conducted at Thiokol's facility in Promontory, Utah. "An engineering test motor (ETM) offers the opportunity to spot any flaws, as well as to conduct 'push the envelope' testing to gauge the components' ability to meet flight requirements."[1579] On November 1, 2001, testing of ETM-2 was performed to evaluate a new low temperature seal (O-ring) material (as a replacement for the standard Viton material) in the aft field joint. Another test objective focused on a new asbestos-free nozzle flexible boot, a thermal barrier that keeps hot gases off the nozzle's guiding mechanism. Several potential nozzle improvements also were tested, including a new adhesive that bonded metal parts to phenolic parts; new environmentally-friendly solvents; a new nozzle ablative insulation; carbon fiber rope thermal barriers in the nozzle joints; and a modified bolted assembly design on one of the nozzle joints.[1580]

According to Jody Singer, in the aftermath of the *Columbia* tragedy, NASA was focused on "ensuring the integrity of our hardware and flight processes with less emphasis on hardware change."[1581] For example, ETM-3, static tested on October 23, 2003, during the RTF activities, was conducted as a "margin test" to help "understand the physical performance limits of the hardware, as well as the physics of the hardware."[1582]

Motor age and age life limits[1583] also were post-*Columbia* areas of concern. Accordingly, the motors stacked and ready for the next launch were destacked and returned to Utah for testing. Flight Verification Motors (FVMs), FVM-1 (the destacked RSRM-89B) and FVM-2 (the destacked RSRM-89A), were the focus of two "Mid-Life and Full-Life Validation" tests on February 17, 2005, and May 1, 2008, respectively. A case-by-case hardware age life extension was performed on the motor segments, and the mixture date of the propellant also was checked.[1584]

Redesign of the SRB bolt catcher was an additional focus. A large bolt holds together the SRB and ET. One-half is contained in the SRB and the other half in the ET. At ET/SRB separation, a cartridge in the bolt fires and breaks the bolt. Half of the broken bolt is thrown into the SRB, where it is caught by the bolt catcher. The other portion is caught by the ET. As a result, there is no debris when the Shuttle is fired up. Following the *Columbia* accident, NASA was concerned that the bolt catcher did not have the proper strength and might come apart, or become a debris source. The housing was redesigned and welded as one piece, rather than the original two-piece.

[1579] NASA MSFC, "Engineering test firing of shuttle SRB called a success," news release, November 2, 2001, http://spaceflightnow.com/news/n0111/03srbtest/.
[1580] NASA MSFC, "Engineering test firing."
[1581] Singer, interview.
[1582] Singer, interview.
[1583] Each RSRM had a certification life of five years and stack life of one year. Singer, interview.
[1584] Singer, interview.

Also, the softer material within each half that helped absorb the bolt was improved, as was the cartridge that split the bolt.[1585]

STS-114, the RTF mission, which launched on July 26, 2005, incorporated the redesigned SRB bolt catcher. It also marked the first use of an ET and SRB three-camera system to help assess the performance of the Shuttle's TPS.[1586] The three video-cameras, one mounted on the ET and one on each SRB, provided views of the orbiter's underside and the ET up until the tank separated from the orbiter at T+8.5 minutes. The "External Tank Observation Camera" was an off-the-shelf video camera and tape recorder installed in each forward skirt of the boosters. It offered a view of the orbiter's nose, ET intertank, and, at ET/SRB separation, the booster opposite the camera. Recording began at launch and continued until after deployment of the drogue parachute. At that time, the recorder switched over to a second identical camera looking out the top to record main parachute deployment. The video was reviewed after recovery of the SRBs.

Another post-*Columbia* change was redesign of the frangible nut, which secured the Shuttle to the MLP. STS-126, launched on November 14, 2008, was the first Shuttle vehicle to incorporate the newly designed frangible nut crossover assembly in each of the eight hold-down locations on the SRBs. The new assembly pyrotechnically linked the two booster/cartridges/detonators in each frangible nut, resulting in faster detonation. With the time reduction, a greater initiation velocity was achieved, and the safety margin was increased.[1587] The redesign of the frangible nut was a recommendation of the CAIB, as a means to minimize "stud hang-ups" that occurred on twenty-three shuttle launches since SSP inception.[1588]

Two TEMs were tested for the RSRM. The first of the two, TEM-12, was a full-scale, full-duration test of RSRM-91B, returned from KSC and tested at the Thiokol facility on March 9, 2006. This test was intended to provide unique information about motor components that had experienced extended exposure to the Florida environment. TEM-13 was a test of the destacked RSRM-90B, conducted on November 1, 2007.[1589]

[1585] Singer, interview.
[1586] The SRB camera, originally certified to provide a closer look at the foam on the ET's intertank, had previously flown on five missions: STS-93 in July 1998, STS-95 in October 1998, STS-96 in May 1999, STS-101 in May 2000, and STS-103 in December 1999. NASA MSFC, *Space Shuttle External Tank and Solid Rocket Booster Camera Systems*, NASA Facts, (Huntsville, AL: George C. Marshall Space Flight Center, April 2005), http://www.nasa.gov/centers/marshall/pdf/114016main_ET_SRB_Cam_FS.pdf.
[1587] NASA MSFC, *Space Shuttle Solid Rocket Booster Frangible Nut Crossover System*, (Huntsville, AL: George C. Marshall Space Flight Center, November 2008), http://www.nasa.gov/centers/marshall/pdf/290339main_8-388221J.pdf.
[1588] CAIB, *Report, Volume I*, 121. A stud hang-up occurs when the hold-down post system stud, located at the base of the aft skirt, is not ejected prior to the first space shuttle liftoff motion. The frangible nut held the stud in place at the top. NASA MSFC, 2008; Chris Bergin, "New SRB modification completed for STS-125 debut," 2008.
[1589] T. Davis, "Static Test Information," (presentation given March 2, 2010).

SRB Non-motor Component Development and Testing

SRB-related testing began early in the STS development period. Between February 10 and March 10, 1973, the U.S. Navy at the Long Beach Naval Shipyard in California, conducted water impact and towing tests on behalf of MSFC (Figure No. E-5). The objective of the test series was to help determine design characteristics for the shuttle boosters. During the water impact tests, an 85 percent-scale model of a SRM casing was dropped from a crane into the ocean.[1590] Later, during November 1973, MSFC conducted drop tests of a SRM scale model and a three-parachute recovery system.

MSFC engineers, developers of the TVC system, assembled two complete TVC subsystems at the Center for use in testing. One was the focus of hot fire tests at MSFC between September and October 1976, to confirm the design of the steering system. The resulting data were evaluated by the MSFC Structures and Propulsion Lab engineers to refine the design of the system. After all modifications were completed, a second test series was conducted at MSFC to certify the TVC system. Later, in 1978, a TVC system installed in the aft skirt of an SRB was tested under actual firing conditions at the Thiokol facility in Utah.[1591]

Various structural tests on complete SRB assemblies were conducted at MSFC, beginning in late 1977, and completed by the end of May 1980 (Figure Nos. E-6, E-7).[1592] A five-ton aft skirt built by McDonnell Douglas Astronautics Company in Huntington Beach, California, was the first large piece of hardware for SRB structural testing to arrive at MSFC.[1593] The aft motor casting segment portion of a SRM was delivered by Thiokol in October 1977.[1594] During the latter part of 1977, one test series at MSFC used a short version of the SRB, known as the "short stack." The three basic test set-ups and about thirty different test phases duplicated as nearly as possible the configuration of the booster at various phases of a shuttle mission. Stresses (loads) were exerted on the test vehicle to prove that it could withstand a variety of conditions during launch, flight, parachute deployment, and water impact and recovery.

Another early test, conducted in January 1977, used the SRB Frustum Location Aid and Drop Test Wedge to simulate the shock environment of the location aid, and to test its reusability. The location aid was attached to a simulated frustum and dropped into the Tennessee River from a crane.[1595]

[1590] "Water Impact Test" (photo caption), *Marshall Star*, April 18, 1973, 4.
[1591] "Hot Firing Test Begins on SRB Steering System," *Marshall Star*, September 15, 1976, 1; NASA MSFC, "Tests of Solid Rocket Booster Steering System Begin," NASA News MSFC Release No. 76-163, September 3, 1976, Series: Space Shuttle Program, Program/Project Files, Drawer 27, Folder: SRB 1976, MSFC History Office, Huntsville.
[1592] Jenkins, *Space Shuttle*, 228.
[1593] "SRB Hardware Due at MSFC," *Marshall Star*, July 27, 1977, 1.
[1594] "Motor Segment for Structural Testing," *Marshall Star*, October 5, 1977, 1.
[1595] "Drop Tests Being Conducted," *Marshall Star*, January 12, 1977, 4.

Development tests of the BSMs, conducted at the Chemical Systems Division of United Technologies Inc. facility near San Jose, California, were designed to qualify the SRBs for flight. BSM tests continued throughout the SSP for requalification and verification (Figure No. E-10). Tests of the SRB electrical system and pre-launch checkout system also were underway in 1978.[1596] The checkout tests used flight-type hardware to simulate the right-hand and left-hand SRBs. The hardware was interfaced with the launch processing system and the tests run by computer at MSFC. These SRB checkout tests served two purposes. They verified that the SRB hardware was compatible with itself, and demonstrated that the launch processing system could be used to check out the SRB system.[1597]

On March 24, 1978, the delivery of a SRB nose cap to KSC marked the arrival of the first Space Shuttle hardware in support of STS-1. This element was placed in storage until the first SRB module assembly began.[1598] By the end of November 1978, almost all of the major structural elements and systems for the initial two flight SRBs had been delivered, with the exception of the motor case segments, scheduled for shipment between March 20 and mid-May 1979.[1599] The first Decelerator Subsystem, which included a clustered assembly of the three main parachutes, a drogue and pilot parachute assembly, and load cells and fittings, arrived in November 1978, for installation in the first assembled SRB. In May 1979, the first TVC system was hot-fired in KSC's Hypergol Maintenance Facility by USBI.[1600]

Following the successful launch of STS-1, three significant issues related to SRB hardware reusability were identified during the post-flight assessment: aft skirt ring structural integrity, aft skirt internal reentry temperatures, and electrical cable salt-water intrusion.[1601] As a result, modifications were made to the aft skirt ring, including the addition of clamps and stiffening brackets. These changes were incorporated in STS-3 and subsequent flights. To address the issue of aft skirt reentry temperatures, beginning with STS-2, changes were made "to strengthen the thermal curtain retainer rings and delay initiation of the nozzle severance charge until after main chute deployment."[1602] A failure investigation was conducted regarding the issue of salt-water intrusion. In a September 21, 1981, summary of SRB reuse assessment activities, George Hardy, NASA's Project Manager of the SRB program, reported that current plans were to return the reusable hardware to flight inventory by April 1982. The first flight scheduled to fly refurbished hardware (other than parachutes) was STS-7 using STS-3 hardware; the parachutes were scheduled for reflight on STS-4.[1603]

[1596] "Variety of Tests Proving SRB Flight Worthy," *Marshall Star*, March 8, 1978, 4.
[1597] "Test Series on SRB Run at Marshall," *Marshall Star*, March 1, 1978, 2.
[1598] "SRB Nose Cap Arrives at KSC," *Marshall Star*, April 19, 1978, 2.
[1599] "Most Major Structural Elements of First Two SRBs Delivered to KSC," *Marshall Star*, November 15, 1978, 4.
[1600] "First Thrust Vector Control System Fired," *Marshall Star*, May 30, 1979, 1.
[1601] George Hardy to Dr. Lucas, "SRB Quarterly Review Action Item No. 4, Summary of SRB STS-1reuse assessment activities/results to data," September 21, 1981, Drawer 27, Folder: SRB 1981, MSFC History Office, Huntsville.
[1602] Hardy, "SRB Quarterly Review."
[1603] Hardy, "SRB Quarterly Review."

On June 27, 1982, after the STS-4 launch, the decelerator system failed, and both SRBs were lost.[1604] The SRBs sank with their descent flight data recorders. Only the frustums with attached drogue parachutes were recovered. The cause of the failure was determined to be the premature separation of one of the riser lines on each of the parachutes. This resulted from a faulty g-switch, which sent a premature signal through the system. The switch sensed the frustum separation at about 5,500' and triggered the riser line separation. The problem was corrected for STS-5 by disabling the separation nuts and ultimately by installing salt-water activated cutters on the riser lines.[1605]

SRB Parachute Testing

Tests for SRB parachute development ran parallel with the SRM test program in 1977 and 1978. In early 1977, prior to the start of the parachute drop test program, prototype parachutes underwent dynamic strip-out tests at the Martin Marietta Corporation facility in Denver, Colorado. Scheduled for completion by March 31, 1977, these tests simulated in-flight parachute deployment from the SRB. A high-tension, quick-release mechanism was used to achieve high velocities for the simulation. The test sequence was filmed, and the film analyzed to confirm proper parachute deployment.[1606] Also in early 1977, the SRB parachutes passed the trial pack and pull-out tests conducted by the Pioneer Parachute Company of Manchester, Connecticut, a subcontractor of Martin Marietta. The static pull-out tests were slow extractions of the parachutes from their bags to provide initial verification of proper parachute packing and deployment.[1607] In March 1978, high-speed sled tests were conducted at the Sandia sled track in Albuquerque, New Mexico. The tests, which involved deployment of the pilot chute only, were designed to determine if the nose cap, when ejected, would clear the vehicle without becoming entangled.[1608]

Between June 1977 and September 1978, the successful performance of six drop tests verified the SRB parachute system design, performance, and structural integrity (Figure Nos. E-8, E-9). The drop test series was conducted over the National Parachute Test Range in El Centro, California, located about one hour's flight from Edwards AFB. A Memorandum of Agreement between DFRC and MSFC defined the responsibilities, policies and operating principals governing this test program.[1609] While MSFC designed and managed the drop tests, DFRC provided the B-52 aircraft and flight and maintenance crews, and performed the testing. The test

---

[1604] NASA MSFC, "Investigation Board Report STS-4 Solid Rocket Boosters Recovery System Failure," June 27, 1982, Box 1982A, MSFC History Office, Huntsville.
[1605] Robin C. Ferebee, personal communication with James M. Ellis, MSFC, August 31, 2011.
[1606] NASA MSFC, "SRB Parachutes Undergoing Dynamic Strip-Out Tests," MSFC Release No. 77-45, March 11, 1977, Microfiche Collection, SHHDC-0924, MSFC History Office, Huntsville, AL.
[1607] "Dynamic Strip-Out Tests."
[1608] "Sled Runs to Test Parachute System for Shuttle's SRB," *Marshall Star*, January 25, 1978, 4.
[1609] W.R. Lucas to David R. Scott, "MOA between MSFC and DFRC for the Shuttle SRB Parachute Drop Test Program," March 24, 1976, Series: Space Shuttle Program, Program/Project Files, Drawer 27, Folder: SRB 1976, MSFC History Office, Huntsville.

program used a simulated SRB test vehicle designed by MSFC to be aerodynamically compatible with the B-52. The simulator weighed approximately one-third the actual empty SRB (about 50,000 pounds). The 11.5'-diameter pilot, 54'-diameter drogue, and three, 115'-diameter main flight-type parachutes were attached to the test vehicle, singly or clustered, and the vehicle was dropped from the B-52 at an altitude of approximately 19,000'. Several different parachute configurations were used to provide various conditions (e.g., reefed and full open canopy shapes).[1610]

The objective of the first drop test, conducted on June 15, 1977, was to measure drogue parachute performance under design load conditions. During this test, the drogue parachute, followed by the three main parachutes, were deployed successfully.[1611] The second test was designed to determine loads on the main parachutes. Test three of the series, conducted on December 14, 1977, focused on the integrity of the drogue chute under overload condition. Fins were added to the test vehicle to increase speed, improve stability, and produce less drag.[1612] During this test, the drogue parachute failed, as a result of insufficient reefing system design, and the test vehicle sustained severe damage.[1613] The successful fourth drop test in May 1977, which deployed the three main parachutes plus the pilot and drogue parachutes, tested the parachute recovery system to its full design limits.[1614] The fifth test, on July 26, 1978, successfully deployed the drogue and three main chutes. The parachute drop test program concluded on September 12, 1978, with the successful sixth drop test.[1615]

Physical and Functional Descriptions

Each SRB (Figure No. E-11) measured approximately 149' long, 12' in diameter, and weighed approximately 1,255,000 pounds fueled, with the propellant accounting for about 1,107,000 pounds, or roughly 88 percent of the total weight. Assembly items and attachments added approximately 1,230 pounds to the overall weight. With few exceptions, the left and right SRBs were almost identical and interchangeable.[1616] The boosters incorporated seven major subsystems (Figure Nos. E-12, E-13): 1) Structural; 2) Reusable Solid Rocket Motor (RSRM); 3) Separation; 4) Electrical and Instrumentation (E&I); 5) Recovery/Deceleration; 6) Thrust Vector Control (TVC); and 7) Range Safety System (RSS). A description of each follows.

[1610] "SRB Parachute Drop Tests Set," *Marshall Star*, June 8, 1977, 1, 4; "Agreement Reached on SRB Parachute System Testing," *Marshall Star*, May 19, 1976, 1, 2.
[1611] "SRB Recovery System Tested," *Marshall Star*, June 29, 1977, 1.
[1612] "Third Air-drop Set for SRB System," *Marshall Star*, November 30, 1977, 1.
[1613] George B. Hardy to Dr. Lucas, "SRB Parachute Drop Test # 3 Failure report," December 16, 1977, Drawer 28, File: SRB Quarterly Reviews 1977, MSFC History Office, Huntsville.
[1614] "Air Drop Test Set for SRB Parachutes," *Marshall Star*, April 19, 1978, 3; "Fourth SRB Parachute Drop Test is Success," *Marshall Star*, May 31, 1978, 2.
[1615] "Parachute Drop Test Successful," *Marshall Star*, August 9, 1978, 3; "SRB Parachute Recovery System Passes Drop Test," *Marshall Star*, September 20, 1978, 1, 4.
[1616] Among the differences were those in the E&I subsystem, the BSM locations, the SRB/ET attach ring orientations, and the forward skirts. USA, *Solid Rocket Booster Illustrated Systems Manual* (Huntsville: United Space Alliance, May 2005), 1.

Structural Subsystem

The SRB structural subsystem provided support for the Shuttle stack on the launch pad, held the vehicle on the pad during SSME thrust buildup and RSRM ignition prior to liftoff, and transferred thrust loads to the orbiter and ET. It also provided structural support for the SRB recovery, range safety, and TVC subsystems, as well for electrical components and the BSMs.[1617] Physically, the major structural subsystem components included the nose cap, frustum, forward separation ring, forward skirt, forward SRB/ET attach fitting, aft SRB/ET attach ring and struts, systems tunnel, and aft skirt (including the thermal curtain). The nose cap, frustum, and forward skirt collectively comprised the forward assembly.

The SRB structural subsystem components were protected by two primary types of thermal protection materials. These included cork and MCC, a spray-on ablative. MCC was used on the nose cap, frustum, forward and aft skirts, and on a portion of the systems tunnel. Cork was used on the SRB aft skirt, SRB/ET attach ring, booster separation motors, struts, and systems tunnel.[1618]

Nose Cap

The nose cap (Figure Nos. E-14, E-15) measured 68” in diameter at the base and 75” in overall length. This structure, made of 2024 aluminum sheet skins, was comprised of four formed ring segments, a spin-formed cap/dome, machined fittings, and an aft machined frustum separation ring.[1619] The nose cap housed the pilot and drogue parachutes, and typically was not recovered. The nose cap was separated from the frustum by three frustum-mounted thrusters.[1620]

Frustum

Also composed of aluminum (2219 forging and 7075 formed skins), the frustum measured 10’ in height, with a 68” minor base diameter and a 146” major base diameter (Figure Nos. E-14, E-15). It incorporated rings, fittings, separation motor housing, main parachute supports, and flotation devices for recovery. The frustum housed the three main parachutes, the altitude sensor, and the forward booster separation motors. The main parachute support structure was mechanically attached, but not considered part of the frustum structural assembly.[1621]

[1617] USA, *Solid Rocket Booster Familiarization Training, Revision K* (Florida: United Space Alliance, 2009), DVD, STR-2; USA, *Booster Manual*, 10.
[1618] USA, *Booster Manual*, 13.
[1619] Over time, there have been three different nose cap vendors, including USBI in Huntsville. James Carleton, interview by Joan Deming and Patricia Slovinac, June 29, 2010, KSC, Florida.
[1620] USA, *Booster Manual*, 10.
[1621] USA, *Familiarization Training*.

Forward Separation Ring

The forward separation ring, machined from 2219 aluminum forgings, was located between the frustum and forward skirt assemblies. It provided a mount for the linear-shaped charge used for separation of the frustum from the forward skirt assembly after the SRBs were jettisoned.

Forward Skirt

The forward skirt, made from 2219 aluminum, measured approximately 125" long and 146" in diameter (Figure No. E-16). It provided the necessary structure to react to parachute loads during deployment and descent, and also provided the hardpoint connection for parachute risers used during retrieval operations.[1622] The forward skirt included secondary structures for mounting components of the E&I subsystem, RSS panels, and the systems tunnel components.[1623] The left forward skirt and right forward skirt were not identical.

Forward SRB/ET Attach Fitting

The forward SRB/ET attach fitting (Figure No. E-17), manufactured from 2219 aluminum, was located on the external wall of the forward skirt. The forward separation bolt that held the ET to each SRB was fixed to this attachment point.

Aft SRB/ET Attach Ring and Attach Struts

The aft SRB/ET attach ring (Figure No. E-18) was comprised of four individual ring segments of steel construction. The segments were made from high strength nickel-chromium based alloys, 4130 and 4340, plus the high strength nickel-cobalt based alloy, Inconel 718. It measured 164" in diameter and 16" high. Located on the forward end of the aft motor segment, the aft SRB/ET attach ring housed the aft IEA and provided attachment points for the three aft struts. Protective covers for the struts and aft IEA encircled the entire ring assembly. The four ring segments were bolted to the motor case at 532 locations, and were joined by sixteen splices and eight angle caps including splice buildup over the systems tunnel.[1624] The attach ring/strut cavities were filled with silicone foam and a layer of silicone rubber was placed between the foam and covers to restrict the flow of hot gases.[1625]

The lower, diagonal, and upper SRB/ET aft attach struts physically attached the SRB to the ET. Each strut contained one bolt and one NASA standard initiator pressure cartridge at each end. The upper strut also carried the umbilical interface between the SRB and the ET, and that

[1622] USA, *Booster Manual*, 11.
[1623] USA, *Familiarization Training*.
[1624] USA, *Booster Manual*, 12.
[1625] USA, *Booster Manual*, 14.

extended on to the orbiter.[1626] The tubular struts, constructed of Inconel 718, were made in two halves and were held together by the aft separation bolt. At separation from the ET, the bolt was split by a pyrotechnic device, and the two halves of the bolt were caught inside the strut halves by honeycomb energy absorbers on each end of the struts.[1627]

Systems Tunnel

The systems tunnel (Figure No. E-19), located on the outside of each SRB, extended from the forward skirt to the aft skirt. It measured about 10" wide and 5" high, and housed electrical cables associated with the E&I subsystem, ground environmental instrumentation (GEI), heater system, and linear-shaped charge. The tunnel floor assemblies were bonded to the SRM case. Tunnel covers, made from 2219 aluminum, were attached to the tunnel floor assembly, and provided lightning, thermal, and aerodynamic protection.[1628]

Aft Skirt

The conical-shaped aft skirt, fabricated from aluminum, measured 90.5" long, with a minor diameter of 146" and a major diameter of 208.2" (Figure No. E-20). It featured integral stringer/skin construction welded to four forged hold-down posts with bolted-in rings. These rings, made of 2219 aluminum, provided structural support and attach points to the MLP. Bolted-in clips and gussets provided additional strength for water impact. The aft skirt provided both aerodynamic and thermal protection. It also provided support mounts for the TVC subsystem and the aft-mounted BSMs. The twin booster aft skirts supported the approximate 4.5 million pound Space Shuttle vehicle on the launch pad prior to SRB ignition.[1629] The thermal curtain assembly, installed circumferentially between the aft skirt aft ring and the SRM nozzle ring with mechanical fasteners, provided thermal protection. It was made from three layers of quartz cloth, fiberfrax insulation, and fiberglass cloth.[1630]

Reusable Solid Rocket Motor (RSRM) Subsystem

Each RSRM measured approximately 126' in overall length, 12.2' feet in diameter at the forward end and 12.72' at the aft (nozzle) end, and had a general wall thickness of 0.5". The major components of the RSRM subsystem were the segmented motor case loaded with solid propellant, and the movable nozzle with exit cone. Other elements of this subsystem included the igniter assembly and joint heaters. All of the RSRM major components were designed to be refurbished and used up to twenty times.

[1626] United Space Alliance (USA), *Shuttle Crew Operations Manual* (Houston: United Space Alliance, 2004), 1.4-7.
[1627] USA, *Familiarization Training*, STR-24, STR-25; NASA MSFC, *External Tank and Booster Camera Systems.*
[1628] USA, *Familiarization Training*, STR-29.
[1629] USA, *Familiarization Training*, STR-3, STR-32.
[1630] USA, *Booster Manual*, 14.

Motor Case Segments

Each RSRM contained four motor segments: forward, forward center, aft center, and aft. The forward motor segment measured 31.5' long and weighed up to 332,000 pounds fueled (Figure No. E-21). Each of the two center segments was 27' long and weighed a combined total of 593,874 pounds fueled (Figure No. E-22). The aft segment was 33' long and weighed 320,464 pounds. The RSRM segments were connected by pinned tang/clevis joints with O-ring seals (Figure Nos. E-23, E-24).

The motor case was of segmented construction to facilitate manufacture, shipping, assembly, and recovery. In total, eleven case segments (cylinders) comprised each motor. These manufacturing segments included the forward dome (3.88' total length), six cylinders (two forward segments, two forward center segments, and two aft center segments, each measuring 13.67' in length), the SRB/ET attachment segment (7.50' in length), two case stiffener segments (10.34' length each), and the aft dome (5.00' in length). The cylindrical segments had a nominal wall thickness of 0.506".[1631] The walls of the aft dome were 0.362" thick.

Each of the motor case segments was a weld-free cylinder produced by the joint efforts of Rohr Industries of Chula Vista, California, and their two subcontractors, the Ladish Company of Cudahy, Wisconsin, and Cal-Doran Metallurgical Services of Los Angeles, California. The metal components of the RSRMs began as ingots, procured from Latrobe Steel in Pennsylvania. The steel ingots, or billets, weighed approximately 31,000 pounds each. The Ladish Company forged the raw steel billets to make pre-forms, then "punched out the centers and formed case segments in a series of forging and roll-forming operations."[1632] Ladish shipped the cylindrical segments to Cal-Doran for tempering (heat treatment) to toughen the steel. The final machining was done by Rohr Industries. The clevis joints were machined and 180 holes were drilled in each joint for the retaining pins, which would couple the segments together.

The cylinders and domes, as well as the igniter chamber and adapter, were roll-formed from D6AC steel, a high strength, medium-carbon steel alloy. The cylinders were joined together with pins via a tang and clevis mechanical joint for a weld-free assembly. The pins were made from MP35N, a high strength multiphase alloy. The pin retainer band and shims were of Inconel 718, and the stiffener T-rings were of 4340 steel. For corrosion protection, the cylinders were painted with rust proof paint, and the bare metal areas were covered with HD-2 grease.

At Thiokol, the case segments were assembled into the forward, aft, and two center casting segments. These were then insulated, lined, filled with solid propellants, and cured.[1633] Rubber was vulcanized to the inside of the steel case segments to insulate them from the heat of propellant combustion (about 6,000 degrees F). The insulation was designed to partially burn

[1631] USA, *Booster Manual*, 156.
[1632] "First SRB Motor Case."
[1633] "First SRB Motor Case."

away during motor operations, but to leave enough material to protect the case. The rubber thickness was greatest in the aft dome (more than 5") and least in the center segment cylinder sections (about 0.15"). Before propellant was cast into a case segment, a liner composed of liquid rubber with a curative added was applied to the insulation. This liquid also had "asbestos floats" in the mixture. The typical thickness of the liner was 0.060". The propellant adhered to the liner better than it did to the insulation.

The forward cast segment was filled with 310,000 pounds of propellant, with 270,000 pounds each in the center forward and aft segments, and 260,000 pounds in the aft segment. The solid propellant was a mixture of ammonium perchlorate as the oxidizer (70 percent by weight; 1.1 million pounds), aluminum powder for fuel (16 percent), plus a polymer binder, PBAN (12 percent) that held the mixture together. An epoxy curing agent (2 percent) also was added, as well as a small amount of iron oxide powder (0.7 percent), which served as a catalyst to increase the burning rate. The solid propellant was a battleship gray in color and had the consistency of a hard rubber eraser. Each of the four motor segments for each pair was loaded with propellant from the same batches of ingredients to minimize any thrust imbalance.

Approximately 167, 600-gallon mixes were required to cast all four segments. Propellant was cast around a mandrel (spindle) inserted into the case, which gave the propellant surface inside the motor a specific shape. There was a different cast configuration for the forward segment, the two center segments, and the aft segment. The propellant was an eleven-point star shape in the forward motor segment and a double-truncated-cone in each of the center segments and the aft segment. The propellant was cured by heating in the cases at 135 degrees F for four days to achieve the desired mechanical properties, then cooled down to shrink back the propellant for core removal. The propellant was storable and stable.[1634]

The individual segments were connected by either a factory joint or a field joint. The field and factory joints prevented hot gas from reaching the O-rings. Factory joints were assembled at the Thiokol plant in Utah.[1635] The joints were located in seven places, mating the: 1) forward dome to the forward case segment ("Forward Y"); 2) the two forward case segment cylinders; 3) the two forward center segment cylinders; 4) the two aft center segment cylinders; 5) the SRB/ET attachment segment to the aft stiffener segment; 6) the two aft segment cylinders; and 7) the aft segment cylinder to the aft dome ("Aft Y"). Each factory joint was internally pressure sealed with dual V1115 fluorocarbon O-rings and full internal insulation. The forward dome featured a forward tang for skirt attachment with 195 pinholes, including eighteen extra pinholes in the thrust bearing attachment. The aft dome had an aft tang for skirt attachment with 177 pinholes and three alignment slots equally spaced around the circumference.

[1634] NASA MSFC, *A Primer on Propellants*, NASA Fact Sheet (Huntsville, AL: George C. Marshall Space Flight Center, no date), Folder: 35, MSFC History Office, Huntsville.

[1635] During stacking in the VAB, three field joints connected the forward segment to the forward center segment; the forward center segment to the aft center segment; and the aft center segment to the attach ring. Field joints were internally pressure sealed with three O-rings and bonded insulation.

Prior to shipment to KSC, Thiokol grit-blasted and installed the systems tunnel and handling rings to all segments, and installed the igniter in the forward segment, the nozzle in the aft segment, and instrumentation in the center segment.

Nozzle Assembly

The nozzle weighed roughly 24,000 pounds and had an approximate 54”-diameter throat and 146” exit diameter.[1636] It was built and shipped in two parts, the forward assembly and the nozzle aft cone (see Figure No. E-23). The forward assembly components were made from D6AC steel and 7075-T73 aluminum. The aft cone assembly housing was made of 7075-T73 aluminum. Metal components were fabricated by Kaiser Aerotech, while the ablative components and flexible bearing joints were made by Thiokol, who also subassembled and assembled the components. The nozzle was of modular-type construction with parts grouped into assemblies to facilitate reuse and refurbishment.[1637] The seven major nozzle subassemblies were: 1) nose inlet; 2) throat inlet; 3) flexible bearing; 4) cowl; 5) fixed housing; 6) forward exit cone; and 7) aft exit cone. The primary assemblies were bolted together, and the nozzle assembly was attached to the aft motor segment with 100 radial and 100 axial bolts.[1638]

The nozzle contained five sealing joints, each including dual redundant O-ring seals. A silicon rubber thermal barrier was used to protect the O-rings. The flexible bearing weighed about 7,000 pounds and measured almost 100” in diameter. It connected the fixed and movable portions of the nozzle, and allowed the nozzle to be moved eight degrees in any direction. Thermal protection for the flexible bearing core was provided by a multi-layer rubber boot and a silicon rubber bearing protector. The housing ablative liner was made from carbon cloth phenolic from North American Rayon Corporation/Cytec Engineered Materials. The structural over-wrap for the carbon cloth phenolic, boot and protector rings was made of glass cloth phenolic from Advanced Glass Fiber Yarns/Cytec Engineered Materials. The aft exit cone subassembly contained the severance system, designed to separate the aft 6’ of the aft exit cone prior to ocean impact. This was done in order to reduce splashdown loads on the nozzle flexible bearing.[1639]

Igniter Assembly

The igniter assembly, contained in the forward motor case segment, was comprised of the igniter, S&A device, and pressure transducers (see Figure No. E-21). The assembly was attached to the forward segment by bolts. The igniter was a small rocket motor measuring 48” long and 17” in diameter. It contained 134 pounds of solid propellant with a 40-point star grain. The S&A

[1636] T.L. Elegante and R.R. Bowman, “Nozzle Fabrication for the Space Shuttle Solid Rocket Motor,” in *Proceedings from the 14th American Institute of Aeronautics and Astronautics and Society of Automotive Engineers, Joint Propulsion Conference, Las Vegas, Nev., July 25-27, 1978* (Reston, VA: American Institute of Aeronautics and Astronautics, Inc., 1978).
[1637] USA, *Booster Manual*, 159.
[1638] USA, *Booster Manual*, 155.
[1639] USA, *Booster Manual*, 160.

device, mounted to the forward end of the igniter, ensured that the motor fired only when commanded. It provided the first ignition pulse via a pyrotechnic charge.[1640]

Electrical Heaters

Each of the three field joints and the igniter joint had an electrical heater which provided environmental protection during pre-launch countdown. The field joints and igniter joints were fabricated by Tayco Engineering of Cypress, California. The 40'-long field joint heaters were installed at KSC. The igniter joint heater was installed at the Thiokol plant. Field joint heaters were active between T-8 hours and T-1 minute. The igniter heater was active between L-18 hours or T-8 hours (if above 55 degrees F) and T-9 minutes. It was deactivated prior to the S&A arm command (barrier-booster rotor rotation).

Hardware

The three stiffener rings were fabricated in 120-degree sections, insulated, and bolted together with splice plates to encircle the case.[1641] A total of 180 high-strength pins were used to join one segment to another. These included three tooling pins, positioned at approximate 120 degrees around the case for case alignment, and 177 cobalt alloy pins for holding.

Separation Subsystem

The separation subsystem provided for the structural release of the SRBs from the orbiter/ET. The primary components of this subsystem were the total sixteen forward and aft BSMs on both SRBs, plus the forward and aft separation bolts.

Booster Separation Motors

Each SRB contained eight small BSMs. One four-motor cluster was installed on the frustum (Figure No. E-25) and another was located in the aft skirt (Figure No. E-26). The BSMs fired simultaneously and provided the force to move the SRB away from the orbiter/ET at separation during flight. Each BSM measured 31" long, 12.865" in diameter, and had a maximum weight of 167 pounds, inclusive of explosive devices and aeroheat shields or aft heat seals with mounting hardware.[1642] The BSMs burned solid propellant which had a sixteen-point star grain configuration. They fired only about one second each to accomplish the separation, with a thrust of about 20,000 pounds. The BSMs were designed to produce no debris that would be damaging to the orbiter tiles.

[1640] ATK Thiokol, *Reusable Solid Rocket Motor RSRM Design and Manufacturing Baseline, Revision C*, (Utah: ATK Thiokol, 2005), DVD.
[1641] USA, *Booster Manual*, 155.
[1642] USA, *Familiarization Training*, SEP-24.

Each BSM contained a motor case, nozzle, igniter, structured attach fittings and pyrotechnic connectors.[1643] The cylindrical-shaped motor case, made from 7075 aluminum, measured 25.83" in length and had a maximum wall thickness of 0.315". The forward end of the case had eight threaded holes and a guide pinhole to provide an alignment interface to the SRB.[1644] The BSM case liner material, specifically formulated for use with the propellant, served as a case wall insulator.[1645] The nozzle/aft closure assembly, attached to the motor case, was made from 7075 aluminum, and the exit cone part of the assembly was carbon steel.[1646] The nozzle was canted 20 degrees to permit installation in the frustum. The BSM igniter consisted of a simple perforated steel tube containing propellant. The small initiator charge was triggered by two (redundant) stainless steel confined detonating fuse initiators loaded with pentaerythrite tetranitrate charges.[1647]

Separation Bolts

Forward and aft structural attachment separation was accomplished with double-ended separation bolts. The forward and aft bolts were of a different size, but functionally identical. Pressure cartridges installed in each end of the bolts provided the explosive force to fracture and separate the bolts, which were designed to separate without producing debris.

The forward separation bolt measured 25" long, 3" in diameter, and weighed 70 pounds, and featured a groove about 11.5" from the top that allowed it to break when the pyrotechnic device fired. After separation, one-half of the bolt remained with the booster, secured within the forward skirt thrust post. The other half was retained with the ET. Although mounted on the ET, the bolt catcher was considered part of the SRB element design.[1648]

Electrical and Instrumentation Subsystem

The E&I subsystem, which connected the SRBs with the orbiter vehicle, controlled a number of functions during the prelaunch, ascent, ET/SRB separation, and deceleration phases. During the prelaunch phase, the data processing elements and cabling supported testing, calibration, and monitoring activities. The E&I subsystem's interconnecting cabling also was used for signal conditioning, power distribution, data processing, and operational flight sensors to support the

---

[1643] "Contractor Chosen for Shuttle Booster Separation Motors," *Marshall Star*, August 13, 1975, 1, 3.
[1644] USA, *Familiarization Training*, SEP-46.
[1645] USA, *Familiarization Training*, SEP-8.
[1646] USA, *Familiarization Training*, SEP-47; USA, *Booster Manual*, 101.
[1647] USA, *Familiarization Training*, SEP-37, SEP-50.
[1648] The bolt catcher was redesigned in 2005 and built by General Products of Huntsville, Alabama. It was changed from a two-piece welded design to a one-piece machined design to eliminate the weld and thereby improve the safety margin. Made from a stronger aluminum alloy, AL7050, the modified bolt catcher featured increased wall thickness (from .125 to .25 inches) and a more open cell texture. Thermal protection, provided by USA at KSC, changed from the original super lightweight ablator to a machined cork covered with a protective paint finish. NASA MSFC, *Bolt Catcher Modifications on the Solid Rocket Booster*, NASA Facts (Huntsville, AL: Marshall Space Flight Center, April 2005), http://www.nasa.gov/centers/ marshall/pdf/114018main_Bolt_Catcher_FS.pdf.

SRB during ascent. It also contained controllers used to regulate the speed of the TVC system's APUs. In addition, the E&I subsystem supported the initiation of the SRM nozzle extension severance and release of the nose cap and frustum during recovery functions.[1649] The primary components of the E&I subsystem included the IEAs and the rate gyro assemblies (RGAs); also included were the altitude switch assembly, the camera system, and the enhanced data and acquisition system.

Integrated Electronic Assembly

Each SRB had two IEAs which contained electronic circuits and wiring (Figure No. E-27). The forward and the aft IEAs were not interchangeable with one another.[1650] The aft IEA was cabled to the orbiter for power; the forward IEA was cabled to the aft IEA from which it received power.[1651] Designed and manufactured by L-3 Communications (formerly Bendix), each box-shaped IEA measured 45" long, 12" high, and 12" wide. The complete aft IEA with its internal components weighed 182 pounds; the complete forward IEA weighed 188 pounds.[1652] Both the forward and aft IEAs were fabricated from the same machined A356 aluminum casting. The top and bottom covers were made from 6061 aluminum sheet and were attached to the casting with ninety screws. The IEAs were hermetically sealed and watertight. The glass-sealed external connectors also were watertight.[1653] The IEAs processed signals for a variety of functions. Specifically, after burnout, the forward IEA initiated the release of the nose cap and frustum, jettison of the SRM nozzle, detachment of the parachutes, and turn-on of the recovery aids. The aft IEA, mounted in the ET/SRB attach ring, connected with the forward assembly and the orbiter avionics systems for SRB ignition commands and nozzle thrust vector control.[1654]

Each IEA had a MDM, an electronic device, which sent or received electrical signals from a sensor and inputted the signals to tape recorders on the SRB and in the orbiter. They were designed and manufactured by Honeywell (Sperry). Also housed in the IEAs was the dedicated signal conditioner, manufactured by the Eldec Corporation of Lynnwood, Washington. This component received an electrical signal from a sensor and changed it to ac or dc and raised or lowered the power level required to perform the intended function. [1655]

Rate Gyro Assembly

Mounted in a watertight compartment of the forward skirt were two RGAs, each containing two gyroscopes with auxiliary components. Each RGA measured 8.25" long, 7.6" wide, and 6.8" in height, and weighed 9.2 pounds. The external case material was aluminum alloy A356 class

[1649] USA, *Booster Manual*, 32.
[1650] USA, *Booster Manual*, 47.
[1651] USA, *Booster Manual*, 31.
[1652] USA, *Booster Manual*, 33, 38.
[1653] USA, *Familiarization Training*, E&I-11.
[1654] "Sperry Rand Gets Shuttle Contract," *Marshall Star*, July 23, 1975, 4.
[1655] "Signal Conditioner Modules Contract Awarded to Eldec," *Marshall Star*, December 24, 1975, 1

II.[1656] The RGAs, designed and manufactured by Northrop Grumman, provided vehicle angular rates (pitch and yaw) to the orbiter control system. The forward IEA powered one RGA, while the other received power directly from the orbiter.

Altitude Switch Assembly

The altitude switch assembly, mounted in the frustum, was designed and manufactured by Clifton Precision. It measured 5.5" high, 3.00" wide, 3.75" deep, and weighed about 2.8 pounds. The case was made of Monel QQ-N-281. The altitude switch assembly initiated the logic signals necessary for deployment of the drogue and main parachutes, and also initiated a timer for nozzle extension jettison.

Camera System

The camera system included the ET observation camera, aft-looking camera, and two solid state video recorders, all located within the forward skirt, as well as the forward-looking camera, housed in the ET attach ring.[1657] These components and interfacing cables were fabricated and assembled "in-house" by USA.

Enhanced Data and Acquisition System

STS-91 in June 1998, marked the first time that the Shuttle carried up to five enhanced data and acquisition system units, mounted on the SRB forward skirt ring. Beginning just after lift-off, these instruments recorded information from the ET and SRB sensors, including internal gas temperatures and pressures, skin temperatures, shock, and vibrations. After recovery, the units were disassembled, and the information uploaded and disseminated.[1658]

Recovery/Deceleration Subsystem

The Recovery/Deceleration subsystem included the assemblies required to "separate, deploy, disconnect, float, and retrieve all recoverable system components."[1659] This subsystem included elements of other SRB subsystems, such as the E&I subsystem altitude switch assembly, and the nose cap and frustum of the structural subsystem.[1660] The decelerator components, which provided attitude and terminal velocity control of the SRBs for water impact, included the pilot and drogue parachute pack assemblies located in the nose cap, plus the altitude switch and the three main parachute pack assemblies and main parachute support structure in the frustum. Collectively, the parachutes sequentially slowed the descent of the expended SRBs. Originally,

[1656] USA, *Familiarization Training*, E&I-25.
[1657] USA, *Familiarization Training*, E&I-33.
[1658] USA, *Booster Manual*, 29; USA, *Familiarization Training*, E&I-30.
[1659] USA, *Booster Manual*, 114.
[1660] USA, *Booster Manual*, 118.

all SRB parachutes and bags were manufactured by the Pioneer Parachute Company of Manchester, Connecticut, a subcontractor to Martin Marietta Corporation. More recent parachutes were made by Irvin Parachute. NASA had a total of sixty-eight large main parachutes built, fifty-six of which were still in active inventory at the end of the program. All were initially certified for ten flights and subsequently recertified for fifteen flights. Twenty-nine drogue parachutes were built and, as a result of attrition, thirteen were in active inventory at the end of the program. The drogue parachutes were initially certified for ten uses and then recertified for thirteen.

The SSP initially used smaller main parachutes, with a 115'-diameter. During the first few flights of the SSP, some single main parachute failures were experienced; the parachutes were impacting the water at higher velocities (109 feet per second versus 88 feet per second). This resulted in more damage to the boosters. NASA switched to a larger, 136'-diameter main parachute, first used on STS-41D, to mitigate this damage. If one large main parachute were to fail, the booster would impact the water at approximately 90 feet per second under two large main parachutes, about the same force as under three small mains.[1661]

The pilot parachute assembly (Figure Nos. E-14, E-15, E-28) included the chute canopy assembly with suspension lines, deployment bag, nose cap bridle, and an energy absorber. The pilot parachute measured 11.5' in diameter and weighed 55 pounds. It was of sixteen-gore, 20-degree conical ribbon construction with a 16 percent uniform porosity.[1662] The drogue parachute measured 54' in diameter and weighed 1,100 pounds, and was of the same sixteen-gore, 20-degree conical ribbon construction as the pilot parachute. The drogue parachute had sixty 102'-long suspension lines clustered in twelve suspension line groups. The retrieval line was 175' long. Each of the three large main parachutes measured 136' in diameter and weighed 2,200 pounds. They were of 160-gore, 20-degree conical ribbon construction with a 15.4 percent uniform porosity. Each main parachute pack assembly featured eight 40' risers, with four risers per deck fitting; eight 98.5' dispersion bridles with ten legs per bridge; and 160, 64' suspension lines with two suspension lines per bridle leg.[1663]

The three main parachutes were packed in deployment bags housed in individual compartments formed by the main parachute support structure within the frustum. This structure, designed to maintain separation of the main parachutes during installation and deployment, measured 62.06" in height by 92.0" in diameter.[1664] Each of the three panel assemblies, spaced 120 degrees apart, extended 54.965" out from the center of the structure.

Included in the main parachute assembly was the Salt Water Activated Release (SWAR). In the early days of the SSP, some of the SRB forward skirts were buckling because of the way the

---

[1661] Jack Hengel, personal communication with James M. Ellis, MSFC, August 31, 2011.
[1662] USA, *Familiarization Training*, REC-17.
[1663] USA, *Familiarization Training*, REC-27.
[1664] USA, *Familiarization Training*, REC-20.

motor splashed down when the parachutes were released at water impact. A solution to this was to keep the main parachutes attached at water impact and allow the boosters to lay down in the water without slapping down.[1665] The SWARs then separated the main parachute dispersion bridles from the risers. The SWARs were self-contained and required no electrical input from the SRB recovery subsystem electronics.[1666]

Thrust Vector Control Subsystem

The TVC subsystem (Figure No. E-29) controlled the direction of flight during the first two minutes of a mission through movement of the nozzles. Two complete TVC subsystems were housed in the aft skirt of each booster. Their primary function was to power the booster nozzle to aid the steering of the Shuttle during ascent. The TVC system for each SRB contained two separate hydraulic power units (HPUs), one to control nozzle position in the rock plane and the other to control nozzle position in the tilt plane.[1667] The HPU components were mounted on the aft skirt between the rock and tilt actuators. The HPUs were driven by the hydrazine-powered turbine, the APU. The APU drove the hydraulic pump through the gearbox to provide a pressurized fluid flow to the servoactuator.[1668] Rock and tilt systems supplied hydraulic power to the TVC electro-hydraulic servoactuators "to effect mechanical positioning of the SRB nozzle in response to steering commands."[1669] The dual action servoactuators were connected to the aft skirt attach point and RSRM nozzle by a clevis pin arrangement. They were hydraulically interconnected to each HPU for operating redundancy in the event of a failure of either HPU.[1670]

Each APU contained a fuel pump, gas generator and gas generator valve module, turbine, gear box, electrical controls, control valves, instrumentation, monitoring system, and the mechanical and electrical connectors required to interface with the other SRB subsystems. Each fuel tank contained twenty-two pounds of hydrazine.[1671] Two APUs, each driving a hydraulic pump, provided hydraulic power to the TVC subsystem of each SRB during the pre-launch and ascent phases of shuttle flight.

During prelaunch, the TVC subsystem was controlled by the APU controller assembly located in the aft IEA in each SRB. After lift-off, all command and control functions of the TVC subsystem originated in either the orbiter's GNC computers or the ascent TVC electronics of the orbiter.[1672] The TVC subsystem was designed to operate from approximately T-26 seconds through the

---

[1665] Jack Hengel, personal communication with James M. Ellis, MSFC, August 31, 2011.
[1666] USA, *Booster Manual*, 117.
[1667] USA, *Familiarization Training*, TVC-2.
[1668] USA, *Booster Manual*, 54.
[1669] USA, *Booster Manual*, 54.
[1670] USA, *Familiarization Training*, TVC-51.
[1671] Chris Bergin, "Shuttle Boosters to sport APU fuel pump safety redesign from STS-134," February 28, 2010, http://www.nasaspaceflight.com/2010/02/shuttle-boosters-sport-apu-fuel-pump-redesign-st.
[1672] USA, *Booster Manual*, 55.

powered flight of the SRB. The electrical power supplied to both of the HPUs was terminated at separation. The total operating time for each HPU was approximately 150 seconds.[1673]

Range Safety Subsystem

The RSS was designed as the shuttle destruct system in the event of a major malfunction or event. The RSS terminated flight by splitting the cases of the SRBs, which eliminated thrust.[1674] Dual (redundant) subsystems, A and B, were provided on each SRB, and these were "cross-strapped" to the opposite SRB through the ET. The RSS was active from T-10 seconds until approximately five seconds before ET/SRB separation.

Located in the forward skirt of each SRB, the RSS included a linear-shaped charge destruct assembly, two command receiver decoders, distributors, a directional and a hybrid coupler, two command antennas, two silver-zinc batteries, a S&A device containing two NASA Standard detonators, four confined detonating fuse assemblies, two confined detonating fuse assembly bulkhead connectors, and harness assemblies with all interconnecting cables.[1675]

The linear-shaped charge assembly, which measured approximately 80' long, was mounted along the SRB length in the systems cable tunnel. Six linear-shaped charge subassemblies were used in each SRB destruct assembly, including one forward, four intermediate, and one aft.[1676] The S&A device consisted of a longitudinal shaft with explosive transfer charges. Explosive leads at this device started the pyrotechnic reaction with the explosive transfer and ignition of the confined detonating fuses. The confined detonating fuse traveled through the forward skirt bulkhead and into the systems tunnel to the linear-shaped charge, which detonated, splitting the SRM case and terminating thrust.[1677]

Part of the RSS was the SRB Tracking System, which permitted tracking of the relative location of each SRB during shuttle ascent. It also provided interim tracking after liftoff, and served as a backup to the skin tracking radar by the Eastern Range. The SRB Tracking System data were used to determine the necessity of flight termination. Components of the tracking system, located on each SRB, included two C-band antennas, a power divider, a C-band transponder, and a C-band controller.

SRB/RSRM Process Flow

"The flow is always improving," noted Jim Carleton, USA's SRB Program Manager. After the *Challenger* accident, the flow changed considerably with a new focus on efficiency, and a

[1673] USA, *Booster Manual*, 56.
[1674] USA, *Booster Manual*, 141.
[1675] USA, *Booster Manual*, 141.
[1676] USA, *Familiarization Training*, RSS-27.
[1677] USA, *Familiarization Training*, RSS-23.

dramatic reduction in the size of the workforce.[1678] The completion of the Solid Rocket Booster Assembly and Refurbishment Facility (SRB ARF) complex at KSC, officially dedicated on August 1, 1986, facilitated such improvements. The SRB ARF Manufacturing Building was specially designed and constructed to support the fabrication and processing of Shuttle SRB non-motor components. Some of this work had historically been completed at the VAB, Hangar AF, and other facilities.[1679] Operations began in 1987 at the SRB ARF, designed to process up to eighteen flight sets of forward skirts, aft skirts, frustums, nose caps, and various smaller components per year. In addition to the fabrication of non-motor SRB components, other activities included the replacement of thermal protection materials, installation of electronic and guidance systems, integration of SRB recovery parachutes into the forward skirt, assembly and testing of steering elements of the TVC system, installation of explosive devices (ordnance) for booster separation, and automated checkout.[1680]

From recovery of the SRBs after splashdown in the Atlantic Ocean through refurbishment, subassembly, and final preparations for the next mission, the SRB/RSRM process flow activities occurred not only at the SRB ARF, but also in multiple contractor-run facilities at KSC, as well as the Thiokol facilities in Utah. An overview of the process flow follows.

Recovery

Parachute Deployment Sequence

About five and one-half minutes after lift-off, and approximately 215 seconds after the SRBs detached from the ET, the pilot, drogue and main parachutes began the process of decelerating the boosters to water impact, about one minute later (Figure No. E-30). Working sequentially (Figure No. E-31), the parachutes slowed the fall of the SRBs from about 360 mph to 50 mph at splash down in the Atlantic Ocean (Figure No. E-32). Water impact occurred approximately 122 nautical miles down range of the launch site.

First, the nose cap separated from the frustum and the pilot parachute was extracted from the nose cap and released. Deployment occurred at an altitude of about 15,200’ and a speed of 364 mph. Next, the pilot chute extracted the drogue chute, and pulled the drogue pack away from the SRB. The drogue parachute was attached to the top of the frustum. Inflation of the drogue parachute provided the initial deceleration and proper orientation for the SRB to hit the water. The drogue parachute inflated in stages; this process is known as “disreefing.”[1681] Initial

[1678] Carleton, interview.
[1679] ACI, *Survey and Evaluation of NASA-owned Historic Facilities and Properties in the Context of the U.S. Space Shuttle Program, John F. Kennedy Space Center (KSC), Brevard County, Florida* (survey report, NASA KSC, October 2007), Appendix C.
[1680] The forward and aft skirts, separation motors, frustum, parachutes, and nose cap were originally manufactured by USBI in Huntsville, Alabama, with other parts made in-house at MSFS. Beginning in October 1999, the USBI functions were absorbed by USA at KSC.
[1681] During the disreefing process, each of the inflation stages was accomplished by pyrotechnically-actuated cutters

deployment to 60 percent occurred at an altitude of approximately 14,500' and speed of 360 mph. The first stage reefing line cutters fired after a seven second delay from deployment and first inflation. This allowed the canopy to grow from 60 percent to 80 percent of full inflation. At this point, approximately 363 seconds after separation, the altitude was roughly 11,400' and the velocity was 320 mph. The second stage reefing line cutters fired after a twelve second delay from deployment, or five seconds after the first disreef. As a result, the canopy enlarged from 80 percent to 100 percent of full inflation.[1682] The drogue parachute opened to 100 percent at an approximate height of 9,200' and speed of 292 mph.

Roughly eleven seconds later, at a height of 5,500' and velocity of 243 mph, the drogue parachute pulled the frustum away from the SRB and deployed the three main parachutes from the frustum. Like the drogue parachute, the main parachutes went through a "disreefing" process involving their gradual opening to slow down the fall of the SRB. Approximately five seconds after deployment, the main parachutes were at 20 percent inflation. Altitude was now 4,110' and velocity was 238 mph. The first stage reefing line cutters fired after a ten second delay, allowing the canopy to grow from 20 to 40 percent at an altitude of 2,100' and velocity of 115 mph. The second stage disreefed after a seventeen second delay allowed the canopy to increase to 100 percent. At full inflation, the altitude was 1,115' and speed was 73 mph.

The SRB nozzle extension was jettisoned just before splashdown, in order to prevent damage to the TVC hardware, located inside the aft skirt, from water impact forces.[1683] This occurred about the time the canopies reached 100 percent of inflation.[1684] The dispersion bridles of the main parachutes separated from the risers via the SWAR, and the main parachutes remained attached to the booster via their 50'-long Kevlar retrieval lines. Air trapped in the motor casing of the booster allowed it to float vertically, with the forward end about 30' out of the water (Figure No. E-32).

The frustum impacted the water at 60 feet per second after being decelerated by the drogue parachute. The frustum floated apex down, with the drogue parachute attached and submerged. The frustum was self-buoyant because of its foam content. The pilot parachute remained attached to the drogue bag. The pilot parachute and drogue bag were recovered, if located. The SRB nose cap and nozzle extension typically were not recovered.

---

that servered a reefing line that keeps the skirt of the parachute gathered until the line was cut.
[1682] USA, *Familiarization Training*, REC-8.
[1683] USA, *Booster Manual*, 117.
[1684] Early in the SSP, when the frustum was separated at a higher altitude, the main chutes reached full inflation before the nozzle was jettisoned (about 13 seconds prior). Later, to allow more time for the drogue to dampen SRB oscillation, the frustrum separation was set to occur at a lower altitude and the nozzle jettison occurred about the same time as the main chutes disreefed to full inflation. Jack Hengel, personal communication with James M. Ellis, MSFC, August 31, 2011.

Recovery at Sea

The expended SRBs, pilot/drogue parachutes, and main parachutes were recovered at sea after each launch by the ships *Liberty Star* and *Freedom Star*. Twenty-four hours prior to launch, the *Liberty Star* and *Freedom Star* travelled to their stations in international waters about 135 miles downrange of the launch site. Both vessels, positioned about 1 mile apart, had to be at their stations four hours prior to launch.[1685] At the time of splashdown, the ships were positioned about 8 to 10 nautical miles from the SRBs' impact area. Each ship was designed to recover one SRB, including its parachutes and frustum (Figure No. E-33).[1686]

According to Joe Chaput, Captain of the *Liberty Star* and manager of USA's Marine Operations at KSC, prior to retrieval, the dive team conducted a search and recovery (if found) of the pilot parachute and drogue bag, and an above water and below water visual/photographic damage assessment.[1687] Divers installed floats and cut the main parachute retrieval lines.[1688] The three main parachutes were wound onto three of the four reels on the ship's deck. The frustum and attached drogue chutes were reeled in next.[1689] The frustum was lifted from the water by the ship's 10-ton crane. The SRBs were recovered last. Two dive teams, of nine persons each, were deployed from two inflatable boats to recover the boosters. An Enhanced Diver-Operated Plug was launched from the ship and towed to the booster by a small boat. The first team, comprised of five divers, inserted the plug into the booster nozzle and pumped air from the ship into the booster. The second team double-checked the aft skirt and plug installation to ensure there were no problems. After inspection, the dewatering process began. This operation, which took approximately twenty minutes, forced out all the water, causing the booster to shift position from vertical (spar mode) to horizontal (log mode). During the final step, a tow line from each ship was connected to a booster, and each booster was towed about 1,800' behind the respective ship. At Port Canaveral, each booster was brought from the stern tow position to the hip tow position alongside the ship for the remainder of the trip to the dock near Hangar AF at Cape Canaveral (Figure No. E-34). The tow was shortened before entering Port Canaveral. The return to Hangar AF typically took twenty-six hours.

Disassembly

At the Hangar AF SRB recovery slip, an approximate twenty-two-day disassembly workflow began with the lifting of the left-hand and right-hand SRBs out of the water by a 200-ton straddle lift crane (Figure No. E-35). After the saltwater was washed off, the SRBs were placed onto

---

[1685] Joseph Chaput, interview by Joan Deming and Patricia Slovinac, KSC, June 29, 2010.
[1686] Typically, *Liberty Star* retrieved the right-hand booster and *Freedom Star* the left-hand booster (USA, *Booster Manual*, 119). Features on the exterior of the SRB, such as the ET attach struts, required that the right-hand SRB be hipped on the starboard side of the towing ship, and the left-hand SRB on the port side.
[1687] Chaput, interview.
[1688] USA, *Booster Manual*, 33.
[1689] The pilot/drogue chute deployment bag assemblies were not always recovered. Replacements were fabricated at KSC's Parachute Refurbishment Facility. ACI, *Kennedy Space Center*, Appendix C.

parallel rail dolly trains. The frustum and parachutes were off-loaded from the ship deck (Figure No. E-36). A two-week open assessment period preceded the start of disassembly operations. During assessment, the SRBs were thoroughly inspected and checked to see if large pieces of TPS or other materials had come off that might have damaged the orbiter. The main parachutes were moved and transported to the Parachute Refurbishment Facility (PRF) at KSC for cleaning and refurbishment.

The frustum was moved into the Hangar AF high bay for assessment and disassembly. It was rinsed with water, and the drogue and pilot parachutes removed and kept wet prior to their transfer to the PRF. The BSMs were inspected for residual propellant and then removed for further disassembly and inspection. The frustums were verified as "safe" by inspecting and removing the confined detonating fuses. All remaining frustum components were removed and staged for refurbishment, reuse, or scrap.

The forward skirt was initially safed, and the data acquisition system, solid state video recorders, S&A device, related ordnance, and batteries, as well as the operational pressure transducer, and ET ball fitting from inside the forward skirts, were removed and cleaned (Figure No. E-37). The TPS materials were removed by hydrolasing.[1690] The TVC system was depressurized, and the IEAs were flushed, washed, and rinsed. The TVC components were removed and refurbished at several places, including the suppliers Hamilton Sundstrand (APUs), Moog (actuators), and Parker Abex (hydraulic pumps).[1691]Also removed were the blast container, struts, nozzle exit cones, ground electrical and instrumentation cables, and linear-shaped charge. The RSS command receivers/decoders were returned to the manufacturer (L3 Cincinnati Electronic, Ohio) for testing and analysis before reuse.

During the second week of operations, the aft skirt and ET attach/stiffener ring were removed; the forward skirt was demated; and the nozzle and igniter were removed, inspected, and prepared for shipment to Thiokol. The demated forward skirts were prepared for further disassembly, inspection, and refurbishment.

Typically during the second and third weeks of processing at the Hangar AF complex, the four RSRM case segments of each booster were separated, inspected, assessed, and cleaned. Joints were assessed, washed, and cleaned, and live propellant was removed. The nozzle-to-case joint was examined for overall erosion and the condition of the joint insulation. The internal insulation was checked for overall performance, remaining liner patterns, debris hits during splashdown (which may have punctured the insulation and led to case hardware corrosion), and unburned propellant in the center forward segment. The joints were preserved immediately after inspection. All corrosion was addressed immediately. Each segment was cleaned out and washed to remove debris, propellant by-product, and nozzle phenolics. The insulation was pressure

[1690] Hydrolasing is a pressure cleaning process, which uses water, sprayed at 17,000 pounds per square inch, to strip off insulation and other materials.
[1691] Carleton, interview.

washed 6' back from both ends to prevent joint corrosion during shipment to Thiokol. Handling rings were installed to prepare the segments for transport to Utah. The segments were then moved from the rail dollies to trailers, and subsequently moved by trailer to the railhead where they were loaded onto special rail cars, covered, and prepared for overland travel back to Utah (Figure No. E-38).[1692]

In the High Pressure Wash Facility at the Hangar AF complex, high pressure cleaning (hydrolasing) of the frustums, forward skirt and aft skirt was performed by a robot to strip off the TPS. The nose cap, almost always lost, was not part of the process. Next, the non-motor components were moved to the explosion-proof Multi-Media Blast Facility where high-pressure impact with glass beads removed paint coatings, primer and sealants, stripping them down to bare metal. After a water-break test and the application of alodine, the components were taken to Hangar N, also in the Industrial Area of CCAFS, for inspection and non-destructive evaluation, including the inspection of welds. The parts were returned to the Hangar AF complex where protective finishes were applied in the SRB Paint Building. Frustum processing was completed with periodic phenolic island replacement and the installation of baro-tube and drain tubes.[1693] In the words of Jim Carleton, at the completion of processing at the Hangar AF complex, the frustums, forward skirts and aft skirts looked "like a new car."[1694]

Refurbishment and Subassembly

Following completion of disassembly and initial cleaning at the Hangar AF complex, during separate but parallel processes, the RSRM segments were returned to Thiokol's refurbishment facility in Clearfield, Utah, for processing, the parachutes were moved to the KSC PRF for cleaning and refurbishment, and the inert or non-propellant SRB elements, including the forward and aft skirts and frustums, were moved to the SRB ARF for refurbishment and subassembly by USA. During the refurbishment process, any outstanding modifications and structure repairs were made. Refurbishment operations at Hangar AF for each flight set of hardware typically required forty-five days for disassembly; 120 days for aft skirt processing; sixty days for the ET attach rings; fifty-five days for the frustums; sixty-five days for the forward skirts; and 300 days for component small parts.[1695]

<u>RSRM Segments</u>

The four motor case segments, igniter components, and nozzle were returned from KSC on railcars and trucks to the Thiokol facilities in Clearfield and Promontory, Utah, for cleaning, inspection, refurbishment and reloading with solid propellant. The components shipped by truck

---

[1692] USA, *Familiarization Training*, DRO-19 through -24.
[1693] USA, *Familiarization Training*, DRO-28.
[1694] Carleton, interview.
[1695] USA, "STS Recordation, Phase I SRB Hardware Process Flow," (presentation to Joan Deming and Patricia Slovinac of ACI, KSC, June 2010), SRB-6.

were received at the Clearfield facility. Following inspection, further disassembly, and processing, they were shipped by truck to Thiokol's main plant in Promontory. The metal parts were surface cleaned and prepared for coating and bonding. Nozzle refurbishment included phenolic tape wrap and machining. Following reloading with propellant, final assembly operations were performed. This entailed installation of the nozzle and igniter, the aft exit cone linear-shaped charge, S&A processing, systems tunnel bonding, and installation of flight and shipping instrumentation.[1696]

The propellant-loaded RSRM segments were returned to KSC via special 200-ton fiberglass-covered railcars (Figure Nos. E-39, E-40). During overland travel, environmental data recorders monitored shock and vibration, as well as the temperature, of the RSRM exit cones and segments. The nozzle components, igniters, stiffener rings and other smaller components were shipped by truck. The joint pins remained at KSC and were refurbished by Thiokol personnel.

At KSC, the reloaded RSRM segments arrived at the Rotation Processing and Surge Facility (RPSF) where they were inspected and rotated (Figure No. E-41).[1697] Processing at this facility included the installation and/or close-out of the stiffener rings, tunnel cables, tunnel covers, thermal curtains, rain curtains, and aft exit cone. In addition, foam was applied to the stiffener, aft skirt and internal rings, and the field joints were closed out. Completed aft skirt assemblies from the SRB ARF were mated to the aft RSRM segment. Left and right aft booster assembly operations in the RPSF required approximately forty-five work days.[1698] Once this work was completed, the booster segments were placed on transporters, and moved to one of the ancillary surge buildings for storage. Sometime thereafter, they were moved to the VAB for integration with the other flight-ready booster components.

Parachutes

The deployed pilot, drogue and main parachutes recovered from the Atlantic Ocean arrived at the PRF from the Hangar AF complex on eight reels. The parachutes were kept wet to prevent ocean salt from crystallizing on the fabric. They were unrolled and untangled in the "defouling" area (Figure No. E-42), then hung on an overhead monorail system and conveyed to the 30,000-gallon capacity washer, where a water wash removed the salt (Figure No. E-43). Each parachute was backed out of the washer and moved into the dryer, where 140-degree F hot air dried it over an average period of five to seven hours. Next, the cleaned and dried parachute was moved to the refurbishment area inside the PRF (Figure No. E-44). Here, all parachutes were hand-inspected, and red flags were placed on damaged areas. An inspector decided whether to make the repair, or to use as is. Typically, each main parachute required hundreds of repairs. The smaller parachutes and deployment bags also were repaired. Following repairs, inspection, and acceptance, all

[1696] ATK, "RSRM Overview," 13-17.
[1697] Rotation of the RSRM segments, a critical component to the preparation of the space shuttle vehicle for launch, originally was performed in High Bays 2 and 4 of the VAB. ACI, *Kennedy Space Center*, Appendix C.
[1698] USA, "STS Recordation, Phase I SRB Hardware Process Flow," SRB-5.

performed at the PRF, the parachutes were folded and placed in canisters. The packing process began with a deployment bag, which was placed into a wood or metal container. The parachute was folded into this bag, and compacted with a hydraulic press. The suspension system was placed on the bottom and the parachute went on top. On average, it took four people five days to pack a main parachute (Figure No. E-45). The three main parachutes were placed into a single parachute support structure.[1699] Overall, parachute refurbishment operations at the facility typically required sixty workdays.[1700]

The processed main parachutes were transported to the SRB ARF via flatbed truck; the drogue and pilot parachutes were moved to this facility separately. Replacement pilot parachutes and pilot/drogue chute deployment bag assemblies, or replacements for non-recoverable items, were made at the PRF. Typically, there was about a 50 percent loss of pilot parachutes in use. They were then delivered to the SRB ARF for further processing and integration. Each flight set was typically stored for six months to one year before its next use. Nine parachute flight sets were maintained in the PRF.[1701]

SRB Non-motor Segments

Refurbishment operations for the non-motor segments were performed in the SRB ARF (Figure No. E-46). These included the application of thermal protection; painting; installation of electronic and guidance systems; integrated assembly of the refurbished parachutes; rebuilding of the TVC system; and the installation of explosive devices (ordnance) for booster separation.[1702] Following processing, the SRB components underwent final automated checkout before they were moved to the VAB for integration. The amount of time required for assembly and check out operations performed in the SRB ARF varied by component. Typically, the left and right aft skirts required 190 workdays; the forward skirts/forward assemblies, 160 days; the frustum, ninety-eight days; the ET attach rings, thirty-four days; and the struts, twenty-two days.[1703]

At the SRB ARF, the initial step was to test the critical dimension of the aft skirt before processing started. Next, the TPS, MCC was applied to the aft skirt.[1704] This mixture of small glass spheres, cork, and epoxy was mixed right in the gun at the time of application. Curing of the TPS took twenty-four to forty-eight hours. After the TPS was cured, a coat of exterior paint was put on the TPS to seal the aft skirt and keep moisture out of the cork. Thus, the aft skirt was

---

[1699] ACI, *Kennedy Space Center*, Appendix C.
[1700] USA, "STS Recordation, Phase I SRB Hardware Process Flow," SRB-5.
[1701] NASA KSC, *Parachute Refurbishment Facility*, NASA Facts, (Florida: Kennedy Space Center, no date), http://www-pao.ksc.nasa.gov/kscpao/nasafact/pdf/PRF.pdf.
[1702] "Inside SRB Refurbishment," *Spaceport News*, July 20, 2001, 4-5.
[1703] USA, "STS Recordation, Phase I SRB Hardware Process Flow," SRB-5.
[1704] Following a trend towards the use of more environmentally friendly materials, three different types of TPS have been used over time, originating with Marshall Sprayable Ablative (MSA) and followed by MSA-1. MCC was first used ca. 1988-1990. The most recent solvents were all water-based. Carleton, interview.

painted twice: once on the bare metal and once on the TPS.[1705] After painting, the aft skirt went to the high bay for subassembly installation, including the TVC system. Following aft skirt build up, it was hot-fire tested at the SRB ARF.

Build-up and testing of the forward assembly, including the forward skirt, frustum, and nose cap, plus attachments, followed a TPS application and painting process similar to the aft skirt and aft assembly. In addition, parachutes brought over from the PRF were installed in the frustum. Prior to installation, the main parachute support structure also underwent hydrolasing to remove sealant, and media blasting to remove the protective finish. Mechanical operations included shim fabrication and fairing assembly installation, nut plate replacement, and helicoil installation. The process was completed with a finishing touch-up, sealant application, and part marking.[1706]

SRB Integration

The four RSRM segments were joined with the SRB forward and aft assemblies to form the flight configuration boosters. This integration process was conducted in three phases. The first phase of the "buildup process" began in the RPSF with the aft and forward segments. Each SRB aft booster assembly consisted of one SRB aft skirt, one RSRM aft motor segment, three RSRM stiffener rings, one RSRM aft exit cone, one ET attach ring, several aft skirt electrical cables, aft system tunnel covers (including covers commonly known as a "rooster tail"), ancillary attach hardware, and several different thermal protection systems. The aft skirt clevis was mated to the aft motor segment tang. The joint was held together using 177 stainless steel pins. After pin insertion, the steel pin retainer band was installed and covered with cork and TPS materials, and the valley of the aft skirt kick ring was filled with RT-455.[1707] Next, the transition floor plate assembly was installed between the aft motor segment floor plates and the rooster tail.[1708] This buildup process took approximately four to six weeks.[1709] The assembled aft boosters were stored in the surge buildings at the RPSF until their transport to the VAB High Bay 1 or 3 integration cell. All segments remained vertical on their pallets until they were transferred to the VAB for stacking (Figure No. E-47).

The second phase of integration entailed SRB stacking operations and Space Shuttle buildup in the VAB. The aft booster assemblies, transported from the RPSF, were mated to the MLP hold-down posts and bolted down (Figure No. E-48).[1710] After installation of hold-down post hardware, the aft center, forward center, and forward motor segments, followed by the forward

---

[1705] Carleton, interview.
[1706] USA, *Familiarization Training*, DRO-33.
[1707] RT455 is a trowelable thermal ablative compound.
http://rtreport.ksc.nasa.gov/techreports/2002report/700%20Process%20Human%20Fac/701.html.
[1708] USA, *Familiarization Training*, INT-3, INT-4.
[1709] Until 2004, this process was done in the VAB High Bay 4. Bartolone, interview.
[1710] Since 1984, following transport from Utah, the fueled SRB segments have been received at the Rotation, Processing, and Surge Facility. Here, they are rotated to vertical, inspected, processed, and stored until their turn in the Space Shuttle stacking process. ACI, *Kennedy Space Center*, Appendix C.

assembly, were brought in to build up the SRB from bottom to top (Figure Nos. E-49, E-50). The stacking process typically alternated left- and right-hand boosters, rather than completing the buildup of one SRB before beginning the other. The forward assembly was connected to the forward motor segment with 195 stainless steel pins. The last step was the installation of the forward skirt access kit, a "pie-shaped flooring to prevent damage to the RSRM igniter and associated cables."[1711] The S&A device was installed after the forward skirt was installed.

During shuttle vehicle mating, the ET was attached to each SRB aft frame by two lateral sway braces and a diagonal attachment. The forward end of the ET was attached to each SRB forward skirt.[1712]

Operations in the VAB typically required about forty-four workdays. This period included nineteen work days for stacking of the left and right boosters, eighteen days for mating with the ET and integrated close outs, and seven days for mating to the orbiter, followed by systems tests.[1713]

Launch

The launch countdown for the SRB/RSRM began about three days prior to launch. RSRM systems became operational approximately eighteen hours prior to launch with activation of the igniter heater. The operational pressure transducers and the joint heaters were powered up at nine hours and eight hours before launch, respectively; the transducers were checked out at T-90 minutes. At T-5 minutes before launch, the igniter heater was deactivated and the S&A device was armed. The SRBs came to life when the TVC system was activated at T-28 seconds before launch.

At T-0, or liftoff, the SRBs were ignited by an electrical spark that sent flames from the igniter down the center of the propellant. The boosters went to full power in two-tenths of a second. At the same time, the frangible nuts on each of the four hold-down bolts were exploded, freeing the Shuttle for lift-off. Operating in tandem with the SSMEs for the first two minutes of flight, the SRBs provided about 80 percent of the thrust to escape the Earth's gravitational pull. Propellant in the forward segment of the RSRM, designed to provide fast acceleration, burned out fifty seconds after launch. The remaining propellant, shaped to burn at a slower rate, was all consumed after about two minutes. Exhausted of their fuel, the boosters burned out and separated from the orbiter and ET. Momentum continued to carry the SRBs upward for another 70 seconds to an altitude of about 43 miles (apogee) before they began their controlled descent back to Earth and splashdown into the Atlantic Ocean. At an approximately 1,100' altitude, firing of a pyrotechnic initiator card activated a linear-shaped charge on the RSRM nozzle to jettison the nozzle extension. This prevented water impact damage to the TVC hardware located inside the

---

[1711] USA, *Familiarization Training*, INT-15.
[1712] NASA, "SRB Overview," 2002, http://spaceflight.nasa.gov/shuttle/reference/ shutref/srb/srb.html.
[1713] USA, "STS Recordation, Phase I SRB Hardware Process Flow," SRB-5.

aft skirt. The timing of the nozzle extension jettison served several purposes. It prevented detonation of the thrust vector control system hydrazine fuel during reentry. Also, it minimized heat and flame damage to the aft skirt heat shield curtain (caused by booster exhaust gas), and prevented contact between the SRB and the severed nozzle extension at water impact.[1714]

[1714] USA, *Familiarization Training*, REC-12.

BIBLIOGRAPHY

Books, Journals, Pamphlets, and Presentation Materials

Adamcik, Robert A. *Voyages of Discovery: The Missions of Space Shuttle Discovery (OV-103), 1984-2011*. Burlington, Ontario, Canada: Apogee Prime, 2010.

Archaeological Consultants, Inc. "Shuttle Orbiter Final Assembly Building/Building 150 Historical Documentation: Air Force Plant 42, Site 1 North, Palmdale, California." Documentation package, NASA JSC, 2008.

_____. Survey and Evaluation of NASA-owned Historic Facilities and Properties in the Context of the U.S. Space Shuttle Program, John F. Kennedy Space Center (KSC), Brevard County, Florida." Survey report, NASA KSC, 2007.

Archaeological Consultants, Inc. and Weitze Research. "Historic Resources Survey and Assessment of the NASA Facility at Santa Susana Field Laboratory Ventura County, California." Survey report, NASA MSFC, 2008.

_____. "NASA-Wide Survey and Evaluation of Historic Facilities and Properties in the Context of the U.S. Space Shuttle Program, Air Force Plant 42, 1 North, Palmdale, California." Survey report, NASA JSC, 2007.

_____. "NASA-Wide Survey and Evaluation of Historic Facilities in the Context of the U.S. Space Shuttle Program: Roll-Up Report." Survey report, NASA, Office of Infrastructure & Administration, Headquarters, 2008.

_____. "NASA-Wide Survey and Evaluation of Historic Facilities and Properties in the Context of the U.S. Space Shuttle Program: Santa Susana Field Laboratory Ventura County, California." Survey report, NASA MSFC, 2007.

ATK. "FSM-17 Pre-Brief." Presentation materials from MSFC, April 8, 2010.

ATK. "RSRM Overview." Presentation materials from MSFC, April 8, 2010.

ATK. "FSM-17 Space Shuttle Reusable Solid Rocket Motor Static Test, February 25, 2010." Presentation materials from MSFC, April 8, 2010 (approved for public release by NASA/MSFC, February 9, 2010).

Baker, David. "A Chronology of the Space Shuttle." *Spaceflight* 15, (June 1973): 210-214.

_____. "Evolution of the Space Shuttle Part 1." *Spaceflight* 15, (June 1973): 202-210.

_____. "Evolution of the Space Shuttle Part 7. External Tank Design - 1." *Spaceflight* 20, (February 1978): 60-66.

_____. "Evolution of the Space Shuttle Part 8. External Tank Design - 2." *Spaceflight* 20, (March 1978): 110-115.

_____. *NASA Space Shuttle Owners' Workshop Manual*. Minneapolis: Zenith Press, 2011.

_____. "A Schedule for the Shuttle." *Spaceflight* 13, (December 1971): 454-455.

Biggs, Robert E. "Missions and Means." In "Fifty Years of Smoke and Fire 1950:2000." Special issue of *Threshold*, no. 19 (2000): 14-19.

_____. "Space Shuttle Main Engine Development History." Presentation, May 11, 2006.

_____. "Space Shuttle Main Engine, The First Ten Years." In *History of Liquid Rocket Engine Development in the United States, 1955-1980*. American Aeronautical Society History Series, vol. 13, edited by Stephen E. Doyle, 69-122. San Diego: Univelt, Inc., 1992.

_____. *Space Shuttle Main Engine: The First Twenty Years and Beyond*. American Aeronautical Society History Series, vol. 29, edited by Donald C. Elder. San Diego: Univelt, Inc., 2008.

The Boeing Company. *Orbiter Vehicle Data Pack Document: Orbiter Vehicle Discovery (OV-103), Volumes I and II*. Huntington Beach, California: The Boeing Company, 2011.

_____. *Orbiter Vehicle Data Pack Document: Orbiter Vehicle Atlantis (OV-104), Volumes I and II*. Huntington Beach, California: The Boeing Company, 2011.

_____. *Orbiter Vehicle Data Pack Document: Orbiter Vehicle Endeavour (OV-105), Volumes I and II*. Huntington Beach, California: The Boeing Company, 2011.

_____. *Space Exploration – Palmdale, CA: AF Plant 42, Site 1 North*. Palmdale: The Boeing Company, 2006.

Bromberg, Joan Lisa. *NASA and the Space Industry*. Baltimore: Johns Hopkins University Press, 1999.

Cleveland, M. Todd. *Evaluation of Resources Associated with the Space Shuttle Program, Michoud Assembly Facility, New Orleans, Louisiana.* Survey report, MAF, 2007.

Collins, Dewayne. "SSME – SSFL Exit Plan." Presentation materials from MSFC, April 12, 2006.

Cook, Jerry, Dewayne Collins, and Daniel McCranie. "SSME Historical Recordation." Presentation materials provided by Daniel McCranie from MSFC, June 12, 2009.

Covault, Craig. "MEDS Glass Cockpit To Enhance Shuttle Safety." *Aviation Week & Space Technology*, March 6, 2000, 54.

Davis, T. "Static Test Information." March 2, 2010. Presentation materials provided by USA at KSC, June 28, 2010.

Dethloff, Henry C. "The Space Shuttle's First Flight: STS-1." In *From Engineering Science to Big Science: The NASA and NASA Collier Trophy Research Project Winners*, edited by Pamela E. Mack, 277-97. Washington, DC: Government Printing Office, 1998.

Dethloff, Henry C. *Suddenly, Tomorrow Came…A History of the Johnson Space Center*. Houston: Johnson Space Center, 1993.

Duggins, Pat. *Final Countdown: NASA and the End of the Space Shuttle Program*. Gainesville, Florida: University Press of Florida, 2007.

Dunar, Andrew J. and Stephen P. Waring. *Power to Explore: A History of Marshall Space Flight Center, 1960-1990.* Washington, DC: NASA History Office, 1999.

Elegante, T.L and R.R. Bowman. "Nozzle Fabrication for the Space Shuttle Solid Rocket Motor." American Institute of Aeronautics and Astronautics, Inc., 1978.

Erickson, Lance K. *Space Shuttle Operations and Technology*. Deer Park, NY: Linus Publications, Inc., 2007.

Freiherr, Gregg. "5…4…3…2…ABORT!" *Air & Space*, Spring 2011: 76-79.

Hale, Wayne, editor. *Wings In Orbit: Scientific and Engineering Legacies of the Space Shuttle, 1971-2010*. Washington, DC: U.S. Printing Office, 2010.

Heppenheimer, T. A. "27,000 Seconds in Hell." *Air & Space*, Spring 2011: 24-31.

Heppenheimer, T. A. *History of the Space Shuttle.* 2 vols. Washington, DC: Smithsonian Institution Press, 2002.

Herring, Mack R. *Way Station to Space. A History of the John C. Stennis Space Center*. The NASA History Series. Washington, DC: NASA Headquarters, 1997.

History Office, George C. Marshall Space Flight Center, Huntsville, Alabama.

Jenkins, Dennis R. *Space Shuttle, The History of the National Space Transportation System. The First 100 Missions*. Cape Canaveral, FL: Specialty Press, 2001.

Jewett, R.P., and J.A. Halchak. "The Use of Alloy 718 in the Space Shuttle Main Engine. In *Superalloys 718, 625 and Various Derivatives*, edited by Edward A. Loria. 749-760. Warrendale, PA: The Minerals, Metals & Materials Society, 1991.

Joels, Kerry Mark and Gregory P. Kennedy. *The Space Shuttle Operator's Manual, Revised edition*. New York: Ballantine Books, 1988.

Jue, Fred, and Fritz Kuck. "Space Shuttle Main Engine (SSME) Options for the Future Shuttle." Paper presented at the 38th AIAA/ASME/SAE/ASEE Joint Propulsion Conference and Exhibit, Indianapolis, IN, July 2002.

Kolcum, Edward H. "Space Shuttle Lightweight Tank Production Begins." *Aviation Week & Space Technology*, November 16, 1981: 131-135.

McDonald, Allan J. (with James R. Hansen). *Truth, Lies, and O-Rings.* Gainesville: University Press of Florida, 2009.

Mission Operations Directorate, Lyndon B. Johnson Space Center, Houston, Texas.

Mitchell, J., ed. *Thirty-Five Years in Power for America*. Canoga Park, California: Rockwell International, Rocketdyne Division, 1990.

NASA. *NASA's Implementation Plan for Space Shuttle Return to Flight and Beyond*. vol. 1. Washington, DC: NASA Headquarters, 2007.

_____. *National Space Transportation System: An overview*. September 1988.

_____. *Space Shuttle Launch Support Equipment Data Handbook*, Engineering Development Directorate, KSC-DD-186 Revision A, March 30, 1993.

_____. *STS-120, Harmony: A Global Gateway*. Washington, DC: NASA, October 2007. http://www.nasa.gov/pdf/ 192725main_STS-120_Shuttle_Press_Kit.pdf.

NASA JSC. "The 21st Century Space Shuttle." NASA Fact Sheet, FS-2000-03-010-JSC, 2000.

_____. *Space Shuttle End-State Subsystems Requirement Document (ESSRD)*, NSTS60585, September 10, 2010.

NASA KSC Engineering. "Solid Rocket Booster Stacking and Closeout Operations." Presentation materials provided by USA at KSC, June 2010.

NASA MSFC, Transition Project Office. "STS Stack" Recordation Data Package, June 15, 2009. Materials provided by Jim Ellis, MSFC, January 2010.

NASA Stennis Space Center. *Shuttle Survey Historic Eligibility Report for Stennis Space Center, Hancock County, Mississippi*. Survey report, SSC, 2007.

National Research Council. *Upgrading the Space Shuttle.* Washington, DC: National Academy Press, 1999.

Pessin, Myron A. "Lessons Learned From Space Shuttle External Tank Development – A Technical History of the External Tank." Technical history, NASA MSFC, October 30, 2002.

Pratt & Whitney Rocketdyne. "SSME Space Shuttle Main Engine," No date. Presentation materials provided by USA at KSC, June 2010.

_____. "Space Shuttle Main Engine KSC Processing, Nominal Flow (Landing to Launch)," Presentation materials provided to Joan Deming and Patricia Slovinac at KSC, June 22, 2010.

_____. "Space Shuttle Main Engine Processing." No date. Presentation materials provided to Joan Deming and Patricia Slovinac by USA at KSC, June 2010.

Reichhardt, Tony, ed. *Space Shuttle, The First 20 Years*. Washington, DC: Smithsonian Institution, 2002.

Rockwell International. *Press Information: Space Shuttle Transportation System*. March 1982.

Rumerman, Judy A., with Stephen J. Garber. *Chronology of Space Shuttle Flights 1981-2000.* Washington, DC: NASA History Division, 2000.

Ryan, Richard. "Lessons in Systems Engineering – The SSME Weight Growth History." No date. Presentation materials provided by Daniel McCranie, MSFC, June 12, 2009.

Slovinac, Patricia. "Cape Canaveral Air Force Station, Launch Complex 39, Canister Rotation Facility (John F. Kennedy Space Center)," HAER No. FL-8-11-K. Historic American Engineering Record (HAER), National Park Service, U.S. Department of the Interior, April 2011.

_____. "Cape Canaveral Air Force Station, Launch Complex 39, Crawler Transporters (John F. Kennedy Space Center)," HAER No. FL-8-11-C. Historic American Engineering Record (HAER), National Park Service, U.S. Department of the Interior, September 2009.

_____. "Cape Canaveral Air Force Station, Launch Complex 39, Launch Control Center (John F. Kennedy Space Center)," HAER No. FL-8-11-A. Historic American Engineering Record (HAER), National Park Service, U.S. Department of the Interior, January 2009.

_____. "Cape Canaveral Air Force Station, Launch Complex 39, Mobile Launcher Platforms (John F. Kennedy Space Center)," HAER No. FL-8-11-D. Historic American Engineering Record (HAER), National Park Service, U.S. Department of the Interior, September 2009.

_____. "Cape Canaveral Air Force Station, Launch Complex 39, Orbiter Processing Facility, High Bay No. 3 (John F. Kennedy Space Center)," DRAFT, April 2011. On file, ACI Sarasota.

_____. "Cape Canaveral Air Force Station, Launch Complex 39, Pad A (John F. Kennedy Space Center)," HAER No. FL-8-11-F. Historic American Engineering Record (HAER), National Park Service, U.S. Department of the Interior, August 2010.

_____. "Cape Canaveral Air Force Station, Launch Complex 39, Shuttle Landing Facility (John F. Kennedy Space Center)," HAER No. FL-8-11-J. Historic American Engineering Record (HAER), National Park Service, U.S. Department of the Interior, April 2011.

_____. "Cape Canaveral Air Force Station, Launch Complex 39, Thermal Protection System Facility (John F. Kennedy Space Center)," HAER No. FL-8-11-L. Historic American Engineering Record (HAER), National Park Service, U.S. Department of the Interior, April 2011.

_____. "Cape Canaveral Air Force Station, Launch Complex 39, Vehicle Assembly Building (John F. Kennedy Space Center)," HAER No. FL-8-11-B. Historic American Engineering Record (HAER), National Park Service, U.S. Department of the Interior, July 2009.

Slovinac, Patricia and Joan Deming. "Mission Control Center (Building 30)," Documentation package, NASA JSC, 2011.

Sweetsir Collection, John F. Kennedy Space Center Archives Department, Florida.

United Space Alliance. "Orbiter Processing Facility (Day One)," no date. Presentation materials provided to Joan Deming and Patricia Slovinac by Stephanie Stilson at KSC, June 2010.

_____. "Orbiter Processing Facility (Day Two)." no date. Presentation materials provided to Joan Deming and Patricia Slovinac by Stephanie Stilson at KSC, June 2010.

_____. "STS Recordation, Phase I SRB Hardware Process Flow." Presentation materials provided to Joan Deming and Patricia Slovinac (ACI) by USA at KSC, June 2010.

_____. "Vehicle Assembly Building External Tank Processing," no date. Presentation materials provided to Joan Deming and Patricia Slovinac (ACI) by USA at KSC, June 2010.

U.S. House, Committee on Science and Technology, Subcommittee on Space Science and Applications. *United States Civilian Space Programs, 1958-1978*. Washington, DC: U.S. Government Printing Office, 1981.

Veris, S. Jenise. "2001 Columbia celebrates 20 years of service." *AeroSpace Frontiers*, April 2001:7.

Weitze, Karen J. *Historical Assessment for the Equipment Boneyards Marshall Space Flight Center*. Survey report, NASA MSFC, 2004.

Weymueller, Carl R. "King-size fuel tank boosts spacemen into orbit." *Welding Design & Fabrication*, May 1979: 176-178.

Williamson, Ray A. "Developing the Space Shuttle." In *Exploring the Unknown: Selected Documents in the History of the U.S. Civil Space Program, Volume IV: Accessing Space*, ed. John M. Logsdon, 161-93. Washington, DC: U.S. Printing Office, 1999.

Wright, Mike, with Bob Jacques. Towards Liftoff: A Brief History and Chronology of the Marshall Space Flight Centers' Role in Designing, Developing, and Testing the Space Shuttle Propulsion Elements for STS-1. Huntsville, Alabama: Marshall Space Flight Center, 2001.

Internet Sources

The Boeing Company. "History of Rocketdyne Division." Accessed at www.boeing.com/history/bna/rocketdyne.htm. December 2006.

The Boeing Company. "Vehicle Engineering." Presentation during STS-106 Flight Readiness Review, August 29, 2000. Accessed at http://www.jsc.nasa.gov/news/columbia/frr/sts-106/10_vehicle.pdf.

Columbia Accident Investigation Board. "Orbiter Major Modification Review." http://www.nasa.gov/columbia/caib/PDFS/VOL2/D14.PDF October 2003.

Columbia Accident Investigation Board. *Report, Volume I*. Washington, DC: U.S. Government Printing Office, 2003. http://history.nasa.gov/columbia/CAIB_reportindex.html.

Ding, Jeff, Bob Carter, Kirby Lawless, Dr. Arthur Nunes, Carolyn Russell, Michael Suites, and Dr. Judy Schneider. "A Decade of Friction Stir Welding R&D At NASA's Marshall Space Flight Center and a Glance into the Future." NASA MSFC, no date. Accessed at http://ntrs.nasa.gov/archive/nasa/casi.ntrs.nasa.gov/20080009619_2008009118.pdf.

Ezell, Linda Neuman. *NASA Historical Databook Volume III Programs and Projects 1969-1978*, The NASA History Series. Washington, DC: NASA History Office, 1988. http://history.nasa.gov/SP-4012/vol3/sp4012v3.htm.

Hecht, Jeff. "Potentially fatal rudder flaw revealed in shuttle." *New Scientist*. March 23, 2004. http://www.newscientist.com/article/dn4804-potentially-fatal-rudder-flaw-revealed-in-shuttle.html.

Howard, Bob. "Beat the Heat: Boeing Team Develops Tiles to Make Shuttle Safer, Easier to Maintain." *Boeing Frontiers*. June 2006. Accessed on November 1, 2011, at http://www.boeing.com/news/frontiers/archive/2006/june/i_ids2.html.

Jue, Fred. "Space Shuttle Main Engine – Thirty Years of Innovation." The Boeing Company, Rocketdyne Propulsion & Power, Canoga Park, California. No date. http://www.engineeringboeing.com/dataresources/SpaceShuttleMainEngineThirtyYearsofInnovation.doc.

Kirkman, Mark. "Space Shuttle Systems 101 – More Than You Ever Needed To Know About the Space Shuttle Main Engines." *InterSpace News*, July 27, 2008. http://www.interspacenews.com/FeatureArticle/tabid/130/Default.aspx?id=2130.

Klesius, Michael. "Evolution of the Space Shuttle." *Air & Space Magazine*, July 01, 2010. http://www.airspacemag.com/space-exploration/Evolution-of-the-Space-Shuttle.html.

Kridler, Chris. "Shuttle Shuffle: *Discovery* Gets the Call." *Florida Today*. July 6, 2005. http://www.space.com/1260-shuttle-shuffle-discovery-call.html.

Leinbach, Mike. *NASA Direct*. Transcript. August 22, 2006. http://www.nasa.gov/multimedia/podcasting/115_askmission_leinbach_transcript.html.

Lewin, Helen. "SSME Planned Assignments Including Performance Impacts." Pratt & Whitney Rocketdyne, September 17, 2009, 20. Accessed August 2010, http://rkdn.ksc.nasa.gov.

Lindroos, Marcus. "President Nixon's 1972 Announcement on the Space Shuttle." Washington, DC: NASA History Office, April 14, 2000. http://history.nasa.gov/stsnixon.htm.

McCandless, Jeffrey W., Robert S. McCann and Bruce R. Hilty. "Upgrades to the Caution and Warning System of the Space Shuttle." *Proceedings of the Human Factors and Ergonomics Society 47th Annual Meeting*, 2003. http://human-factors.arc.nasa.gov/publications/20051025103849_McCandless_HFES_2003%202.pdf.

"NASA Awards Space Shuttle Main Engine Contract Modification." *Aero-News Network, Inc.* http://www.nasa.gov/home/hqnews/2011/mar/HQ-C11-017_SSME.html

NASA. "Columbia to Begin Third Decade in Space With Feb. 28 Liftoff." *Kennedy News*. February 14, 2002. http://www.nasa.gov/centers/kennedy/news/releases/2002/release-20020214.html.

_____. "NASA Centers and Responsibilities." *NSTS 1988 News Reference Manual*. 1988. http://science.ksc.nasa.gov/shuttle/technology/sts-newsref/centers.html.

_____. *NASA Facts: Landing the Space Shuttle Orbiter*. August 2005, revised 2006. http://www-pao.ksc.nasa.gov/kscpao/nasafact/pdf/LandingatKSC06.pdf.

_____. *NSTS Shuttle Reference Manual*, 1988. http://science.ksc.nasa.gov/shuttle/technology/sts-newsref/sts_asm.html.

_____. "Shuttle Carrier Aircraft." *NSTS Shuttle Reference Manual*. August 31, 2000. Accessed August 2010 http://science.ksc.nasa.gov/shuttle/tehnology/sts-newsref/sts-oalt.html.

_____. *Report of the SSME Assessment Team*. January 1993. Accessed August 2010, http://ntrs.nasa. gov/archive/nasa/casi.ntrs.nasa.gov/19930012456.pdf.

_____. *Space Shuttle Mission STS-9 Press Kit*, November 1983. Accessed at http://www.scribd.com/doc/19964486/NASA-Space-Shuttle-STS9-Press-Kit.

_____. *Space Shuttle Mission STS-59 Press Kit*. April 1994. http://www.scribd.com/doc/19723409/7/TOUGHENED-UNI-PIECE-FIBROUS-INSULATION.

_____. *Space Shuttle News Reference*. 1988. http://ntrs.nasa.gov/archive/nasa/casi.ntrs.nasa.gov/19810022734_1981022734.pdf.

_____. *Space Shuttle Program 1999 Annual Report*. http://www.spaceflight.nasa.gov/shuttle/reference/1999_shuttle_ar.pdf.

_____. *United States Space Shuttle Firsts: 25th Anniversary*. KSC Historical Reports. Florida: Kennedy Space Center, 2006. http://history.nasa.gov/space_shuttle_firsts.pdf.

NASA DFRC. *HL-10 Lifting Body*. Fact Sheets. California: Dryden Flight Research Center, 2009. http://www.nasa.gov/centers/dryden/news/FactSheets/FS-010-DFRC.html.

_____. *Shuttle Carrier Aircraft*. NASA Fact Sheets. California: Dryden Flight Research Center, 2012. http://www.nasa.gov/centers/dryden/news/FactSheets/FS-013-DFRC.html.

NASA Headquarters., "Report of the Space Task Group, 1969." Washington, DC: NASA History Office, 1969. http://www.hq.nasa.gov/office/pao/History/taskgrp.html.

_____. "The Vision for Space Exploration." February 2004. http://www.nasa.gov/pdf/55583main_vision_space_exploration2.pdf

NASA History Office. "Space Shuttle Main Engine (SSME)." Accessed at http://history.nasa.gov/sts25th/tech.html.

NASA JSC. *Flight 2R: First Crew on the International Space Station*. NASA Facts. Texas: Johnson Space Center, 1999. http://spaceflight.nasa.gov/spacenews/factsheets/index.html#research.

_____. *A History of U.S. Space Stations*. NASA Facts. Texas: Johnson Space Center, 1997. http://spaceflight.nasa.gov/spacenews/factsheets/pdfs/history.pdf.

_____. *The Service Module: A Cornerstone of Russian International Space Station Modules*. NASA Facts. Texas: Johnson Space Center, 1999. http://spaceflight.nasa.gov/spacenews/factsheets/index.html#research.

_____. *Unity Connecting Module: Cornerstone for a Home in Orbit. The First U.S.-Built International Space Station Component*. NASA Facts. Texas: Johnson Space Center, 1999. http://spaceflight.nasa.gov/spacenews/factsheets/index.html#research.

_____. *The Zarya Control Module: The First International Space Station Component to Launch*. NASA Facts. Texas: Johnson Space Center, 1999. http://spaceflight.nasa.gov/spacenews/factsheets/index.html#research.

NASA KSC. 1981-1999 Space Shuttle Mission Chronology. Florida: Kennedy Space Center, no date. http://www.nasa.gov/centers/kennedy/pdf/167716main_1981-99Volume1.pdf.

_____. *Crawler Transporters*. NASA Facts Florida: Kennedy Space Center, 2006. http://www-pao.ksc.nasa.gov/kscpao/nasafact/pdf/crawlertransporters2006.pdf.

_____. *KSC Transporters*. NASA Facts Florida: Kennedy Space Center, 2000. Accessed at http://www-pao.ksc.nasa.gov/kscpao/nasafact/pdf/KSCTransporters06.pdf.

_____. *Parachute Refurbishment Facility*. NASA Facts. Florida: Kennedy Space Center, 2001. Accessed at http://www-pao.ksc.nasa.gov/kscpao/nasafact/pdf/PRF.pdf.

_____. *Solid Rocket Boosters and Post-Launch Processing*. NASA Facts. Florida: Kennedy Space Center, 2006. http://www.nasa.gov/centers/kennedy/pdf/146685main_srb-et.pdf.

_____. "Solid Rocket Booster Retrieval," 2003. http://spaceflight1.nasa.gov/shuttle/support/processing/srb/.

_____. "Space Shuttle, STS-41D." http://www.nasa.gov/mission_pages/shuttle/shuttlemissions/archives/sts-41D.html.

_____. *Space Shuttle Era Facts*. NASA Facts. Florida: Kennedy Space Center, 2012. http://www.nasa.gov/pdf/566250main_2011.07.05%20SHUTTLE%20ERA%20FACTS.pdf.

_____. *Space Shuttle Main Engine Processing Facility*. NASA Facts. Florida: Kennedy Space Center, 2006. http://www.nasa.gov/centers/kennedy/pdf/167449main_SSMEPF-06.pdf.

NASA MSFC. *Bolt Catcher Modifications on the Solid Rocket Booster*. NASA Facts. Alabama: Marshall Space Flight Center, 2005. http://www.nasa.gov/centers/marshall/pdf/114018main_Bolt_Catcher_FS.pdf.

_____. *External Tank Forward Bipod Fitting*. NASA Facts. Alabama: Marshall Space Flight Center, 2005. http://www.nasa.gov/centers/marshall/pdf/114020main_ET_Bipod_FS.pdf.

_____. *External Tank Liquid Hydrogen Tank/Intertank Flange*. NASA Facts. Alabama: Marshall Space Flight Center, 2005. http://www.nasa.gov/centers/marshall/pdf/113323main_FLANGE_FACT_SHEET.pdf.

_____. *External Tank Liquid Oxygen Feedline Bellows*. NASA Facts. Alabama: Marshall Space Flight Center, 2005. http://www.nasa.gov/centers/marshall/pdf/119015main_revLOX_FS.pdf.

_____. *External Tank Protuberance Air Load (PAL) Ramps*. NASA Facts. Alabama: Marshall Space Flight Center, 2005. http://www.nasa.gov/centers/marshall/pdf/114015main_PAL_FS.pdf.

_____. *External Tank Thermal Protection System*. NASA Facts. Alabama: Marshall Space Flight Center, 2005. http://www.nasa.gov/centers/marshall/pdf/114022main_TPS_FS.pdf.

_____. *Friction Stir Welding*. NASA Facts. Alabama: Marshall Space Flight Center, 2001. http://www.nasa.gov/centers/marshall/pdf/104835main_friction.pdf.

_____. *Improvements to the Space Shuttle's External Tank*. NASA Facts. Alabama: Marshall Space Flight Center, 2005. http://www.nasa.gov/centers/marshall/pdf/119016main_Shuttle_ET_FS.

_____. *Michoud Assembly Facility*. NASA Facts. Alabama: Marshall Space Flight Center, 2007. http://www.nasa.gov/centers/marshall/pdf/169340main_MSFC%20MAF%20FS-eps%20logo.pdf.

_____. *Preparing the External Tank, ET-118*. NASA Facts. Alabama: Marshall Space Flight Center, 2006. http://www.nasa.gov/centers/marshall/pdf/155290main_shuttle_et118_fs.pdf.

_____. *Return to Flight External Tank, ET-119*. NASA Facts. Alabama: Marshall Space Flight Center, 2005. http://www.nasa.gov/centers/marshall/pdf/150034main_Shuttle_ET-119_FS.pdf

_____. *Space Shuttle Main Engine Turboprop*. NASA Facts. Alabama: Marshall Space Flight Center, 2005. http://www.nasa.gov/centers/marshall/pdf/113012main_shuttle_turbopump.pdf.

_____. *Space Shuttle External Tank and Solid Rocket Booster Camera Systems*. NASA Facts. Alabama: Marshall Space Flight Center, 2005. http://www.nasa.gov/centers/marshall/pdf/114016main_ET_SRB_Cam_FS.pdf.

_____. *Space Shuttle External Tank ET-120, STS-120*. NASA Facts. Alabama: Marshall Space Flight Center, 2007. http://www.nasa.gov/centers/marshall/pdf/193201main_Space_Shuttle_External_Tank_ET-120_STS-120.pdf.

_____. *Space Shuttle External Tank ET-128, STS-124*. NASA Facts. Alabama: Marshall Space Flight Center, 2008. http://www.nasa.gov/centers/marshall/pdf/228641main_8-368946_%282%29.pdf

_____. *Space Shuttle Main Engine Advanced Health Management System*. NASA Facts. Alabama: Marshall Space Flight Center, 2007. http://www.nasa.gov/centers/marshall/pdf/186582main_REV_B_AHMS_Fact_Sheet_STS-118.pdf.

_____. *Space Shuttle Main Engine (SSME) Enhancements*. NASA Facts. Alabama: Marshall Space Flight Center, 2002. http://www.nasa.gov/centers/marshall/pdf/174534main_ssme.pdf.

_____. *Space Shuttle Main Engine Turbopump*. NASA Facts. Alabama: Marshall Space Flight Center, 2005. http://www//nasa.gov/centers/marshall/pdf/113012main_shuttle_turbopump.pdf.

_____. *Space Shuttle Solid Rocket Booster. Frangible Nut Crossover System*. NASA Facts. Alabama: Marshall Space Flight Center, 2008. http://www.nasa.gov/centers/marshall/pdf/290339main_8-388221J.pdf.

_____. *Super Lightweight External Tank*. NASA Facts. Alabama: Marshall Space Flight Center, 2005. http://www.nasa.gov/centers/marshall/pdf/113020main_shuttle_lightweight.pdf.

NASA Office of Inspector General. "Followup Audit on Orbiter Maintenance Down Periods at KSC," 1998. http://oig.nasa.gov/audits/reports/FY98/executive_summaries/ig-98-016es.htm

NASA Stennis Space Center. John C. Stennis Space Center History, "Chronology of Significant Events." Accessed August 2010, http://www.nassa.gov/centers/stennis/about/history/chronology/chronology.html.

O'Leary, R.A. and J.E. Beck. "Nozzle Design." (From P&W journal *Threshold*, 1992). Accessed August 2010, http://www.engineeringatboeing.com.

Pratt & Whitney. "Pratt & Whitney Delivers First Overhauled Space Shuttle Oxidizer Turbopump." http://www.pw.utc.com/media_center/press_releases/2003/08_aug/8-22-2003_7412428.asp

Reed, R. Dale, with Darlene Lister. *Wingless Flight: The Lifting Body Story*. Washington, D.C.: NASA History Series, 1997. http://history.nasa.gov/SP-4220/ch7.htm.

Schramm, Harry F. and Kenneth W. Sullivan. "An Evaluation of the Total Quality Management Implementation Strategy for the Advanced Solid Rocket Motor Project at NASA's Marshall Space Flight Center." NASA Technical Memorandum, NASA TM-103533, May 1991, NASA, MSFC. http://ntrs.nasa.gov/archive/nasa/casi.ntrs.nasa.gov/19910015285_1991015285.pdf.

Space Shuttle's External Tank Flies with Improved Welds." *Welding Magazine*, March 3, 2010. http://weldingdesign.com/news/top-story/space-shuttle-external-tank-improved-welds-0303/.

U.S. Environmental Protection Agency. "Montreal Protocol on Substances that Deplete the Ozone Layer." http://www.epa.gov/ozone/downloads/MP20_FactSheet.pdf.

USA Communications. "Orbiter Upgrades." *Shuttle Reference and Data*. April 6, 2000. Accessed September 2010, http://www.shuttlepresskit.com/STS-101/REF125.htm.

United Space Alliance. *APU/Hydraulic/Water Spray Boiler Systems Training Manual.* Houston: United Space Alliance, 2008. http://www.nasa.gov/centers/johnson/pdf/383439main_apu_hyd_wsb_21002.pdf.

_____. *Audio/UHF Training Manual.* Houston: United Space Alliance, 2006. http://www.nasa.gov/centers/johnson/pdf/383440main_aud_uhf_21002.pdf.

_____. *Crew Escape Systems 21002.* Houston: United Space Alliance, 2005. http://www.nasa.gov/centers/johnson/pdf/383443main_crew_escape_workbook.pdf.

_____. *Environmental Control and Life Support System.* Houston: United Space Alliance, 2006. http://www.nasa.gov/centers/johnson/pdf/383445main_eclss_21002.pdf.

_____. *Mechanical Systems Training Manual.* Houston: United Space Alliance, 2008. http://www.nasa.gov/centers/johnson/pdf/383449main_mechanical_systems_workbook_21002.pdf.

Weekly Comp. Pres. Docs., Remarks at the National Aeronautics and Space Administration, Vol. 40, Issue 3 (January 19, 2004). http://www.gpo.gov/fdsys/pkg/WCPD-2004-01-19/content-detail.html.

Whalen, Jessie E. and Sarah L. McKinley. "Chronology: MSFC Space Shuttle Program Development, Assembly, and Testing Major Events (1969-April 1981), December 1988, MSFC, Management Operations Office, MHR-15. http://ntrs.nasa.gov/archive/nasa/casi.ntrs.nasa.gov/19910005807_1991005807.pdf.

Interviews and Oral Histories

Bartolone, Tony. Interview by Jennifer Ross-Nazzal. *NASA STS Recordation Oral History Project*, July 5, 2011. http://www.jsc.nasa.gov/history/oral_histories/STS-R/BartoloneAP/bartoloneap.htm.

Blackburn, Gerald. Interview by Rebecca Wright, *NASA STS Recordation Oral History Project*, August 24, 2010. http://www.jsc.nasa.gov/history/oral_histories/STS-R/BlackburnGA/blackburnga.htm.

Bridwell, Porter. Interview by Jessie Whalen and Sarah McKinley, December 18, 1987. Oral Interviews: Space Shuttle History Project Transcripts Collection, Report No. MHR-16, NASA, MSFC, December 1988.

Brown, Richard L. Interview by Jessie Whalen, June 27, 1988. Oral Interviews: Space Shuttle History Project Transcripts Collection, Report No. MHR-16, NASA, MSFC, December 1988.

Driver, Orville. Interview by Jessie Whalen and Sarah McKinley, December 14, 1987. Oral Interviews: Space Shuttle History Project Transcripts Collection, Report No. MHR-16, NASA, MSFC, December 1988.

Goetz, Otto K. Interview by Jennifer Ross-Nazzal. *NASA STS Recordation Oral History Project*, July 20, 2010. http://www.jsc.nasa.gov/history/oral_histories/STS-R/GoetzOK/goetzok.htm.

Hopson, George D. Interview by Jennifer Ross-Nazzal. *NASA STS Recordation Oral History Project*, July 20, 2010. http://www.jsc.nasa.gov/history/oral_histories/STS-R/HopsonGD/hopsongd.htm.

Kahl, Robert H. Interview by Rebecca Wright. *NASA STS Recordation Oral History Project*, August 25, 2010. http://www.jsc.nasa.gov/history/oral_histories/STS-R/KahlRH/kahlrh.htm

Marshall, Bob. Interview by Jessie Whalen and Sarah McKinley, April 22, 1988. Oral Interviews: Space Shuttle History Project Transcripts Collection, Report No. MHR-16, NASA, MSFC, December 1988.

McCormack, Donald L. Interview by Jennifer Ross-Nazzal. *NASA STS Recordation Oral History Project*, March 24, 2011. http://www.jsc.nasa.gov/history/oral_histories/STS-R/McCormackDL/mccormackdl.htm.

Mitchell, Royce. Interview by Jennifer Ross-Nazzal. *NASA STS Recordation Oral History Project*, June 30, 2010. http://www.jsc.nasa.gov/history/oral_histories/STS-R/MitchellRE/mitchellre.htm.

Odom, James B. Interview by Rebecca Wright. *NASA STS Recordation Oral History Project*, July 20, 2010. http://www.jsc.nasa.gov/history/oral_histories/STS-R/OdomJB/odomjb.htm.

Pessin, Myron A. "Mike." Interview by Rebecca Wright. *NASA STS Recordation Oral History Project*, June 30, 2010. http://www.jsc.nasa.gov/history/oral_histories/STS-R/PessinMA/pessinma.htm.

Roberts, William J. Interview by Jennifer Ross-Nazzal, *NASA STS Recordation Oral History Project*, August 25, 2010, 9. http://www.jsc.nasa.gov/history/oral_histories/STS-R/RobertsWJ/robertswj.htm.

Singer, Jody A. Interview by Jennifer Ross-Nazzal. *NASA STS Recordation Oral History Project*, June 21, 2010. http://www.jsc.nasa.gov/history/oral_histories/STS-R/SingerJA/singerja.htm.

Smith, Gerald W. Interview by Rebecca Wright. *NASA STS Recordation Oral History Project*, May 12, 2011. http://www.jsc.nasa.gov/history/oral_histories/STS-R/SmithGW/smithgw.htm.

Stewart, Frank. Interview by Jessie Whalen, February 4, 1988. Oral Interviews: Space Shuttle History Project Transcripts Collection, Report No. MHR-16, NASA, MSFC, December 1988.

Taylor, Henry. Interview by Jennifer Ross-Nazzal. *NASA STS Recordation Oral History Project*, August 26, 2011. http://www.jsc.nasa.gov/history/oral_histories/STS-R/TaylorHT/taylorht.htm.

Thomas, John. Interview by Jennifer Ross-Nazzal. *NASA STS Recordation Oral History Project*, June 29, 2010. http://www.jsc.nasa.gov/history/oral_histories/STS-R/ThomasJW/thomasjw.htm.

Thompson, J.R. Interview by Jennifer Ross-Nazzal. NASA STS Recordation Oral History Project, May 13, 2011. http://www.jsc.nasa.gov/history/oral_histories/STS-R/ThompsonJR/thompsonjr.htm.

Verscheere, Chuck. Interview by Sarah McKinley, June 27, 1988. Oral Interviews: Space Shuttle History Project Transcripts Collection, Report No. MHR-16, NASA, MSFC, December 1988.

Films, Videos and DVDs

ATK Thiokol, "Reusable Solid Rocket Motor RSRM Design and Manufacturing Baseline." 5 Day Course, December 5-7, 2005, TR014041, Rev. C.

USA. *Solid Rocket Booster Familiarization Training, Revision K,* DVD. Florida: United Space Alliance, 2009.

United Space Alliance. *SRB Retrieval At-Sea Operations,* January 2010.

Appendix A-SSP Historic Photos

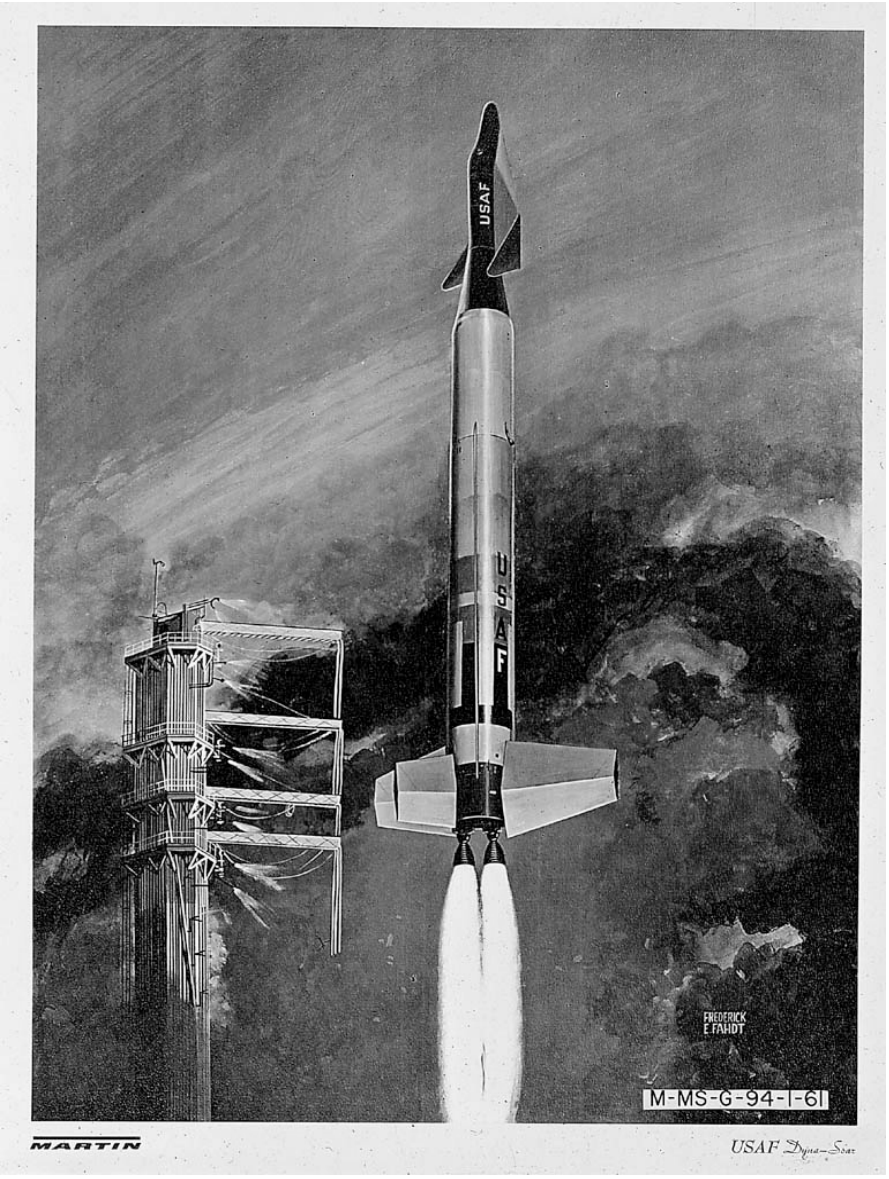

Figure No. A-1. Artist's concept of a Dyna-Soar launch, January 1, 1961.
Source: NASA Marshall Space Flight Center, MSFC-9902548, accessed May 2012, at http://mix.msfc.nasa.gov/IMAGES/MEDIUM/9902548.jpg.

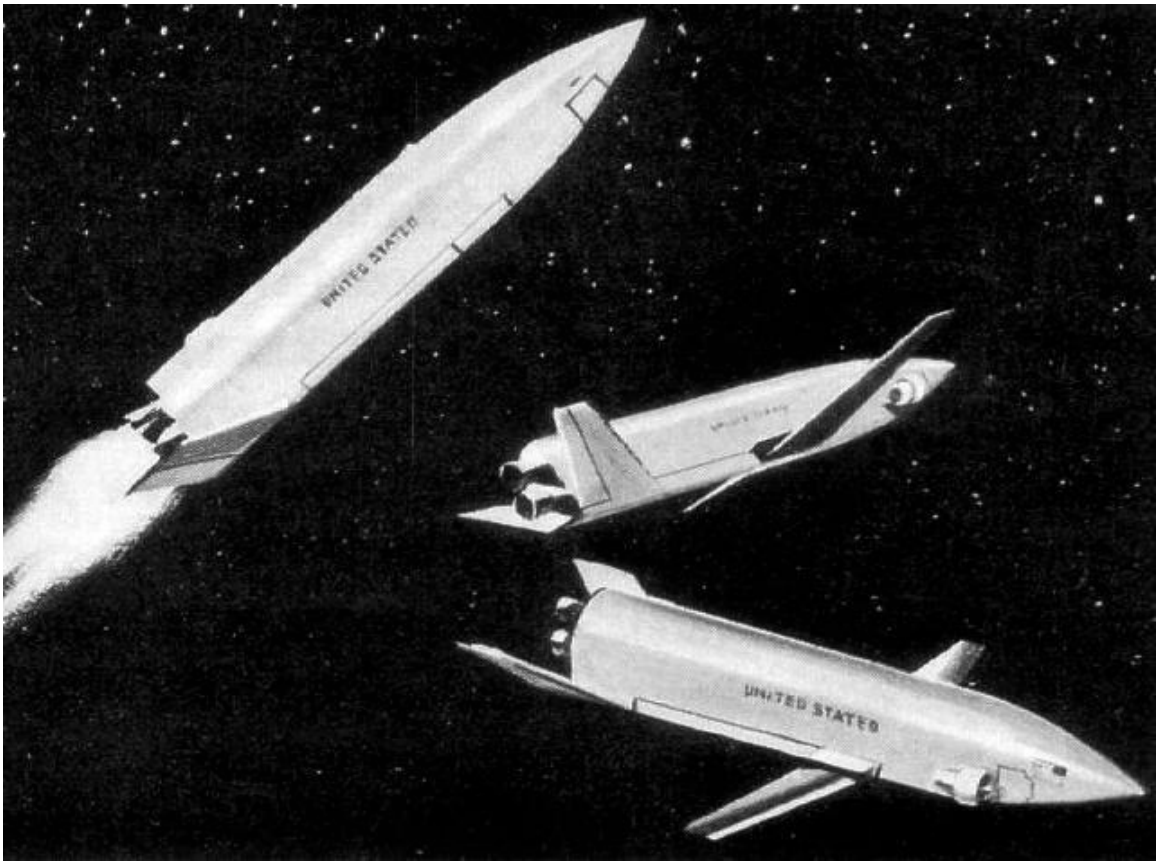

Figure No. A-2. Convair's Triamese.
Source: NASA, accessed May 2012, at http://www.astronautix.com/lvs/triamese.htm.

Figure No. A-3. Maxime Faget's straight wing design.
Source: NASA, as printed in T. A. Heppenheimer's, *The Space Shuttle Decision*, 208.

Figure No. A-4. First landing of a HL-10 lifting body, 1966.
Source: NASA Dryden Flight Research Center, E-16207, accessed May 2012, at http://www.dfrc.nasa.gov/gallery/photo/HL-10/Small/E-16207.jpg.

Figure No. A-5. Aerial of Kennedy Space Center, Florida, with VAB area in foreground, LC 39A in background. April 13, 2005.
Source: NASA Kennedy Space Center, KSC-05PD-1108, accessed May 2012, at http://mediaarchive.ksc.nasa.gov.

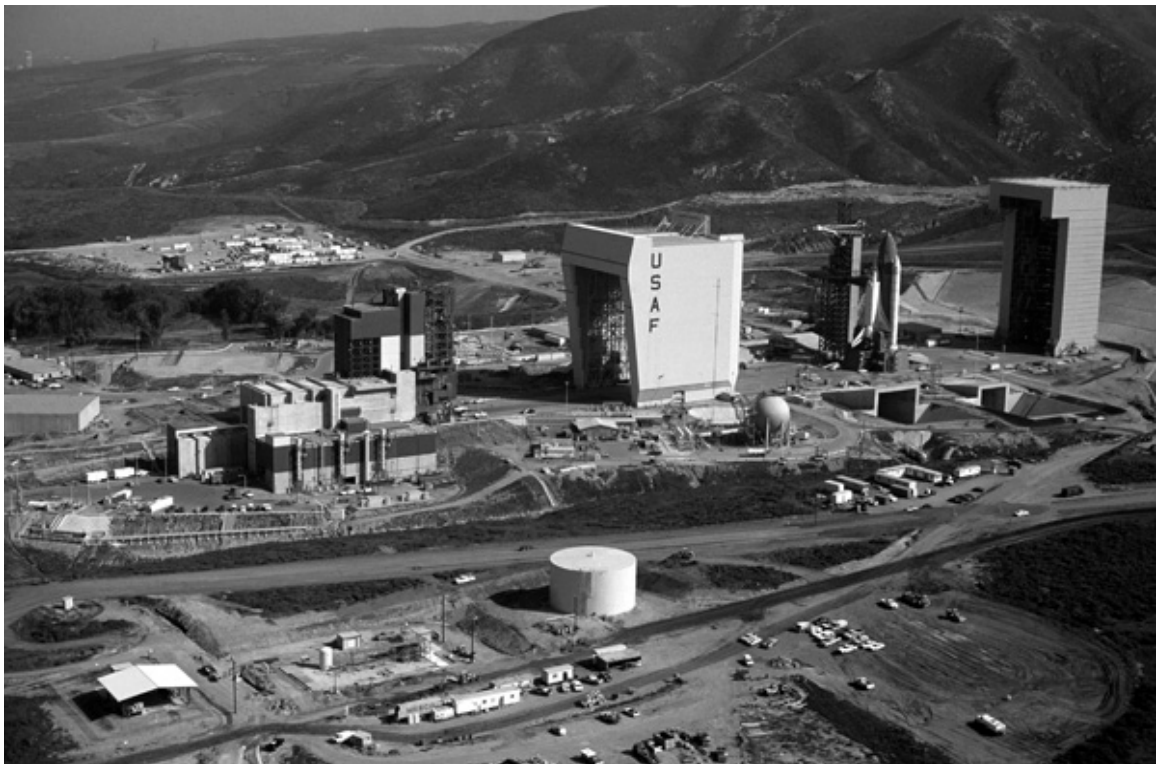

Figure No. A-6. Vandenberg Air Force Base, California.
Source: U.S. Air Force, accessed May 2012, at http://spaceflightnow.com/delta/d352/slc6shuttle.

Figure No. A-7. *Enterprise* en route overland between Palmdale and Dryden, 1977.
Source: NASA Dryden Flight Research Center Photo Archives, ECN 6679.

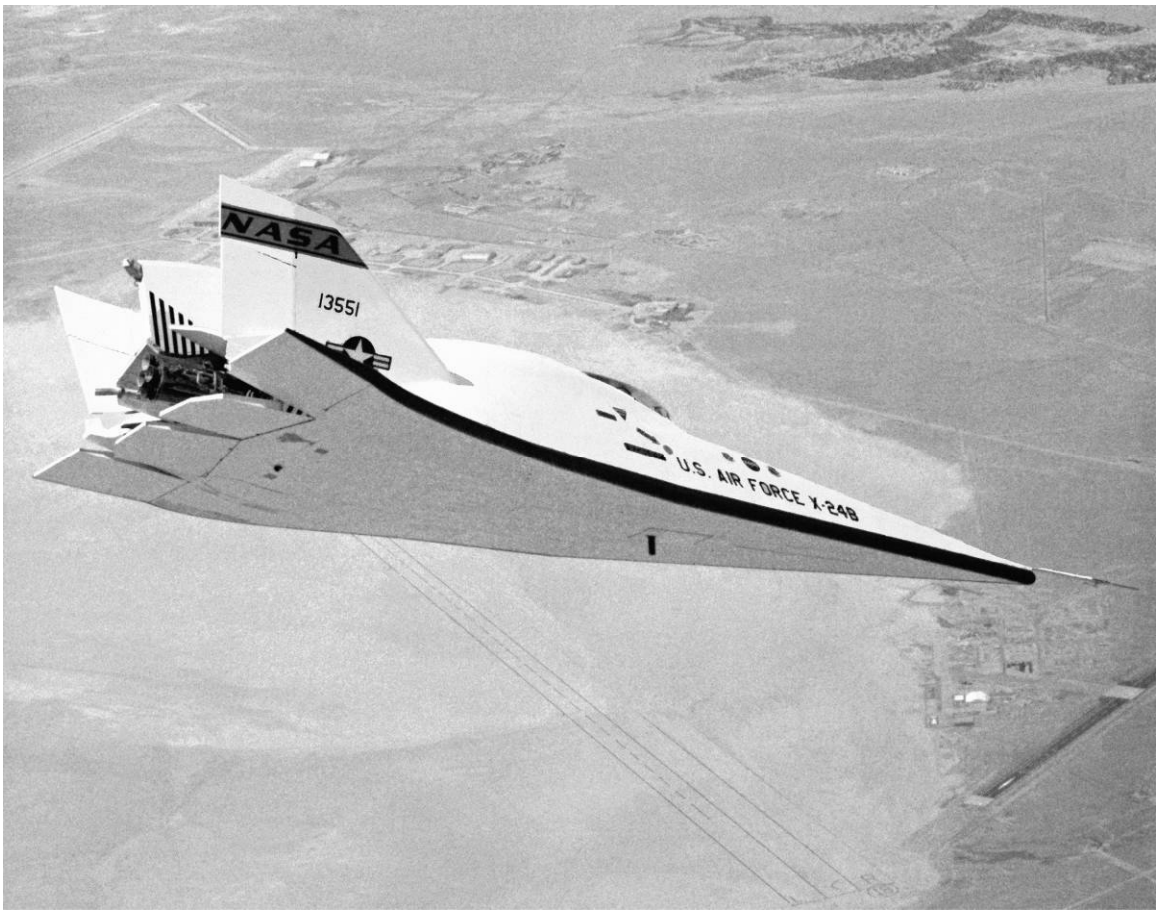

Figure No. A-8. X-24B lifting body in flight above dry lakebed at Edwards AFB, 1975. Source: NASA Dryden Flight Research Center, EC75-4643, accessed May 2012, at http://www.dfrc.nasa.gov/gallery/photo/X-24/Small/EC75-4643.jpg.

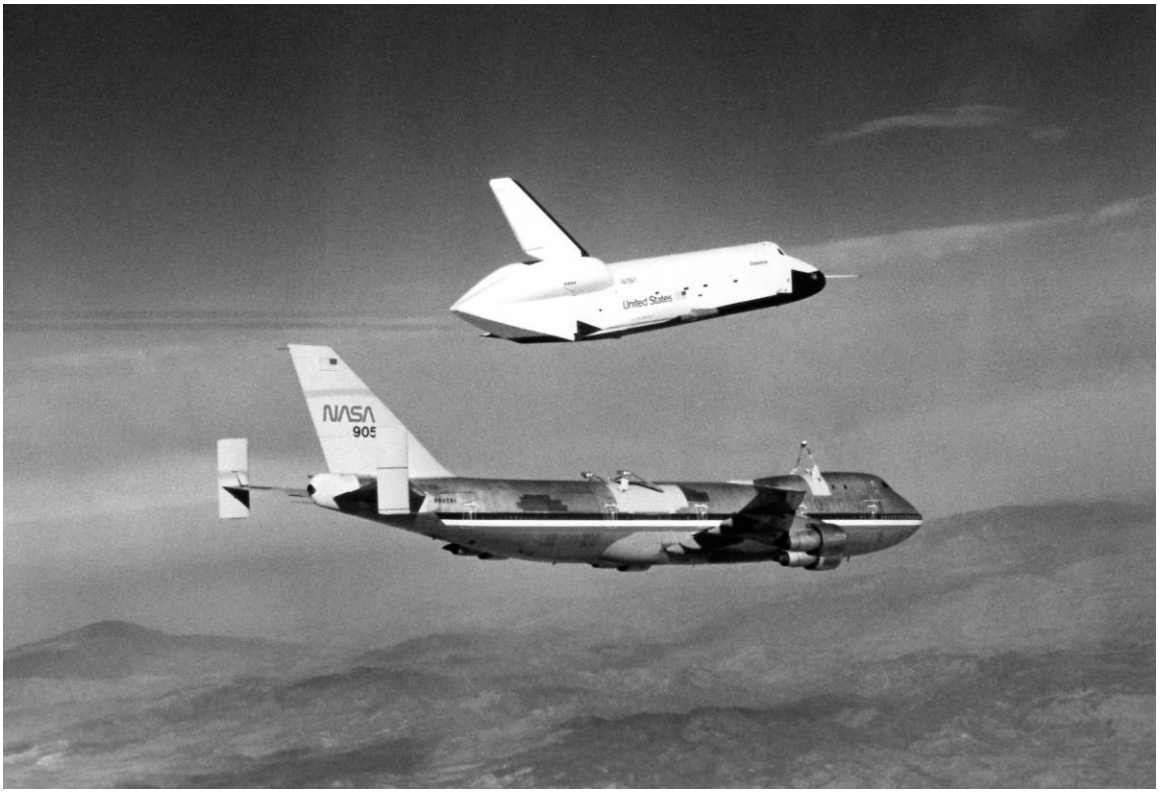

Figure No. A-9. *Enterprise* and SCA N905NA during the second free flight of the ALT program, September 13, 1977.
Source: NASA Dryden Flight Research Center, ECN77-8608, accessed May 2012, at http://www.dfrc.nasa.gov/gallery/photo/ALT/Small/ECN77-8608.jpg.

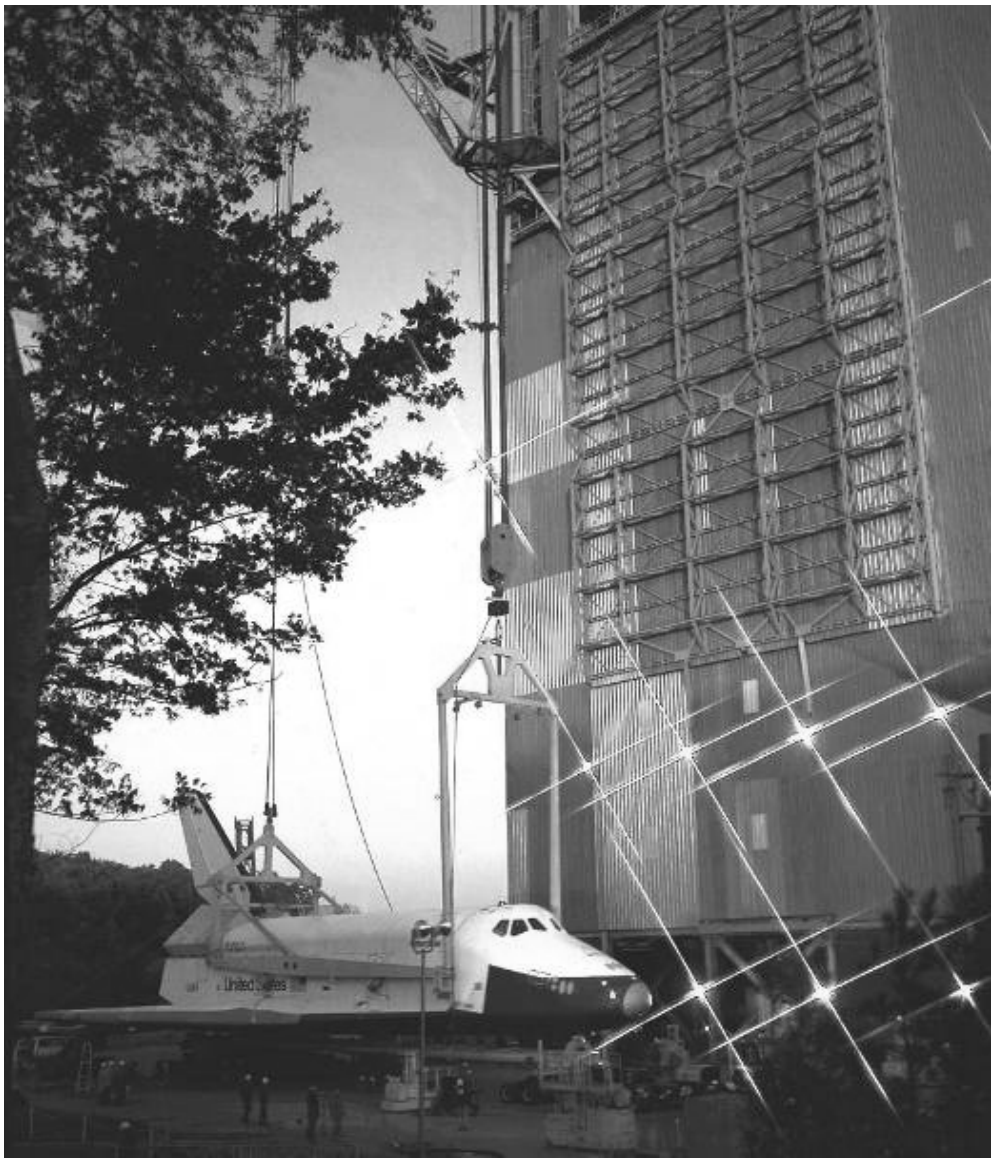

Figure No. A-10. Orbiter *Enterprise* on strongback, outside Building 4550 at MSFC, 1978. Source: NASA Marshall Space Flight Center, MSFC-7889025, accessed May 2012, at http://mix.msfc.nasa.gov/IMAGES/MEDIUM/7889025.jpg.

Figure No. A-11. *Pathfinder* Simulator is hoisted into MSFC Dynamic Test Stand, 1977. (Source: NASA Marshall Space Flight Center, MSFC-7885689, accessed May 2012, at http://mix.msfc.nasa.gov/IMAGES/MEDIUM/7885689.jpg.

Figure No. A-12. The April 12, 1981, launch of STS-1, *Columbia*.
Source: NASA Headquarters, GPN-2000-000650, accessed at
http://grin.hq.nasa.gov/IMAGES/SMALL/GPN-2000-000650.jpg.

Figure No. A-13. *Columbia* touches down on the Northrup Strip at White Sands following STS-3, March 31, 1982.
Source: NASA Johnson Space Center, S82-28838, accessed at http://images.jsc.nasa.gov/lores/S82-28838.jpg.

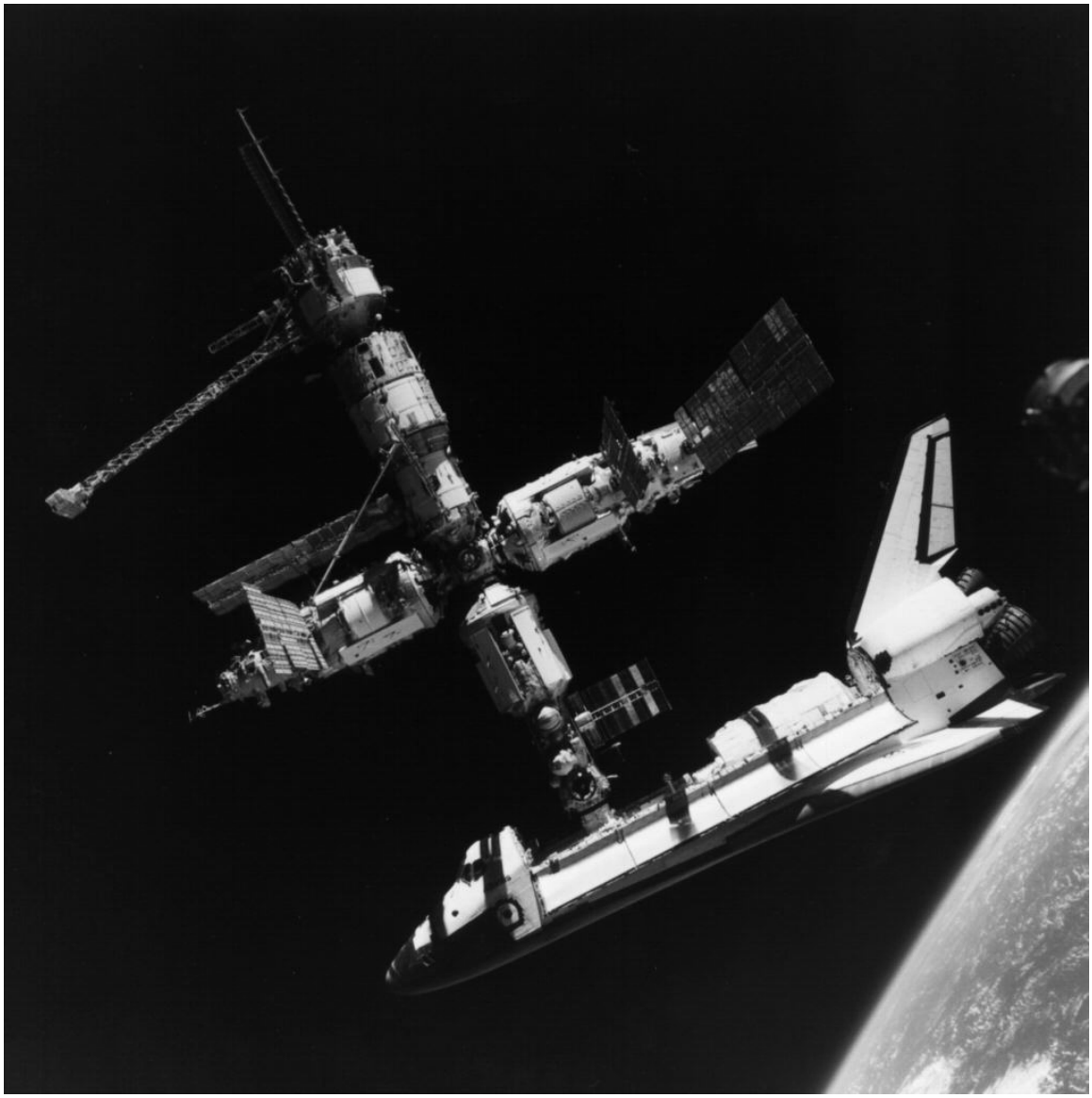

Figure No. A-14. *Atlantis* docked to *Mir* during STS-71, July 4, 1995.
Source: NASA, accessed May 2012, at
http://spaceflight.nasa.gov/history/shuttle-mir/multimedia/m-photo.htm.

Figure No. A-15. View of the ISS with the *Zarya* module (left) connected to the *Unity* module (right), December 1998.
Source: NASA Marshall Space Flight Center, MSFC-9900389, accessed May 2012, at http://mix.msfc.nasa.gov/IMAGES/MEDIUM/9900389.jpg.

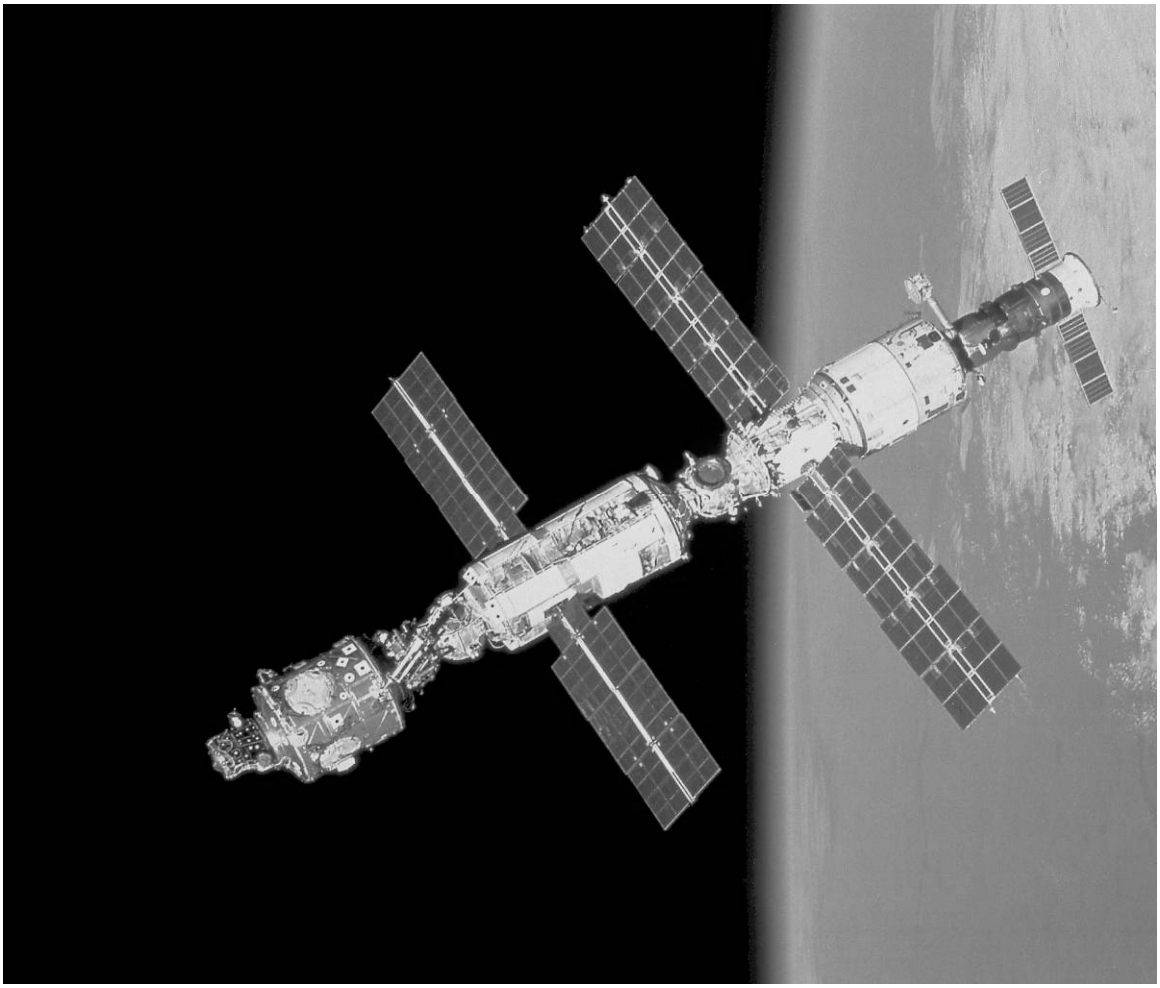

Figure No. A-16. View of the ISS with, from bottom left to top right, a Soyuz spacecraft, the *Zvezda* service module, the *Unity* module, and the *Zarya* module, December 1, 2000. Source: NASA Marshall Space Flight Center, MSFC-0100334, accessed May 2012, at http://mix.msfc.nasa.gov/IMAGES/MEDIUM/0100334.jpg.

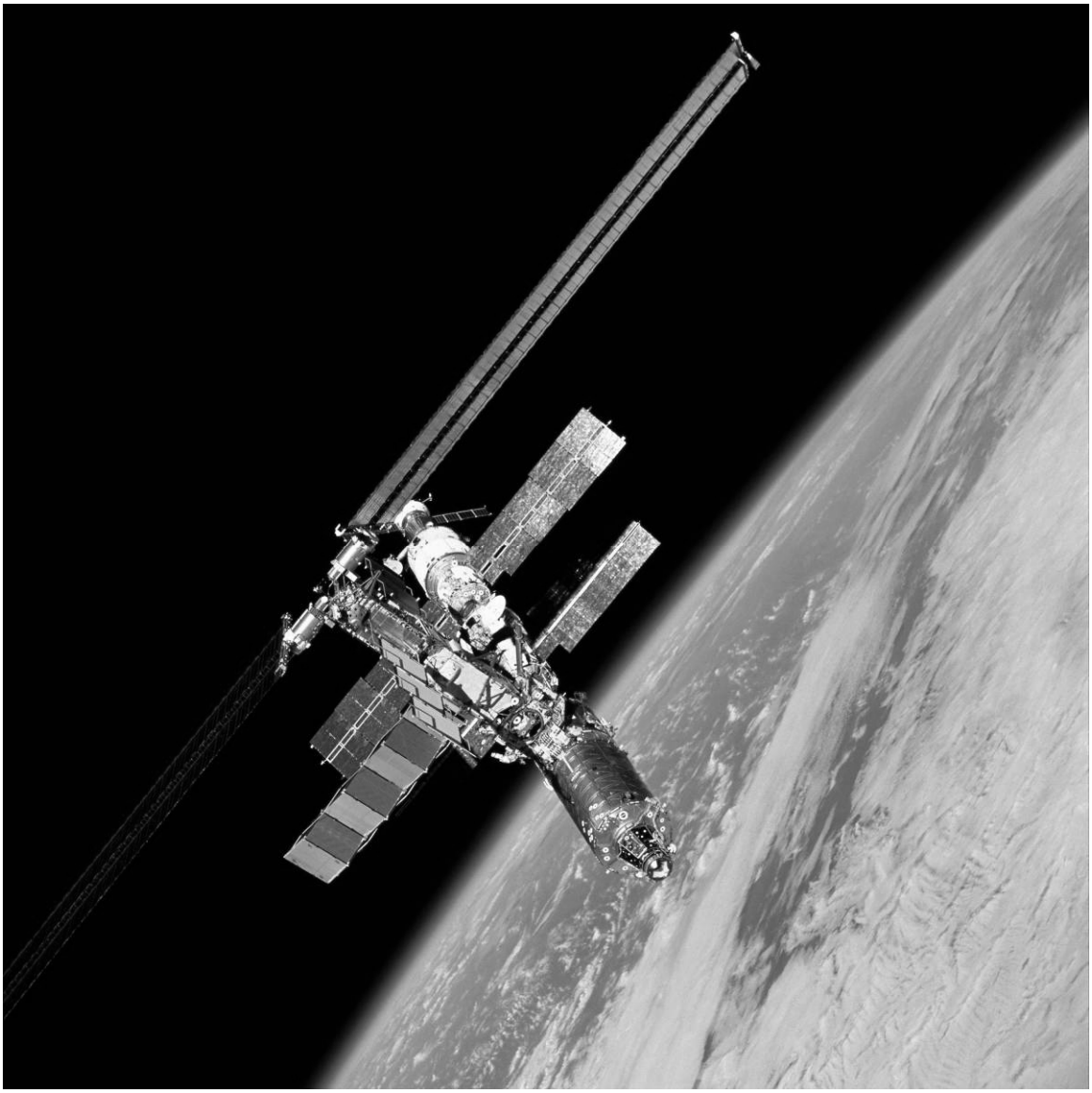

Figure No. A-17. View of the ISS after installation of the *Destiny* laboratory module (bottom right), February 16, 2001.
Source: NASA Marshall Space Flight Center, MSFC-0102501, accessed May 2012, at http://mix.msfc.nasa.gov/IMAGES/MEDIUM/0102501.jpg.

Figure No. A-18. View of the ISS after installation of the S1 truss (center), October 16, 2002. Source: NASA Marshall Space Flight Center, MSFC-0203031, accessed May 2012, at http://mix.msfc.nasa.gov/IMAGES/MEDIUM/0203031.jpg.

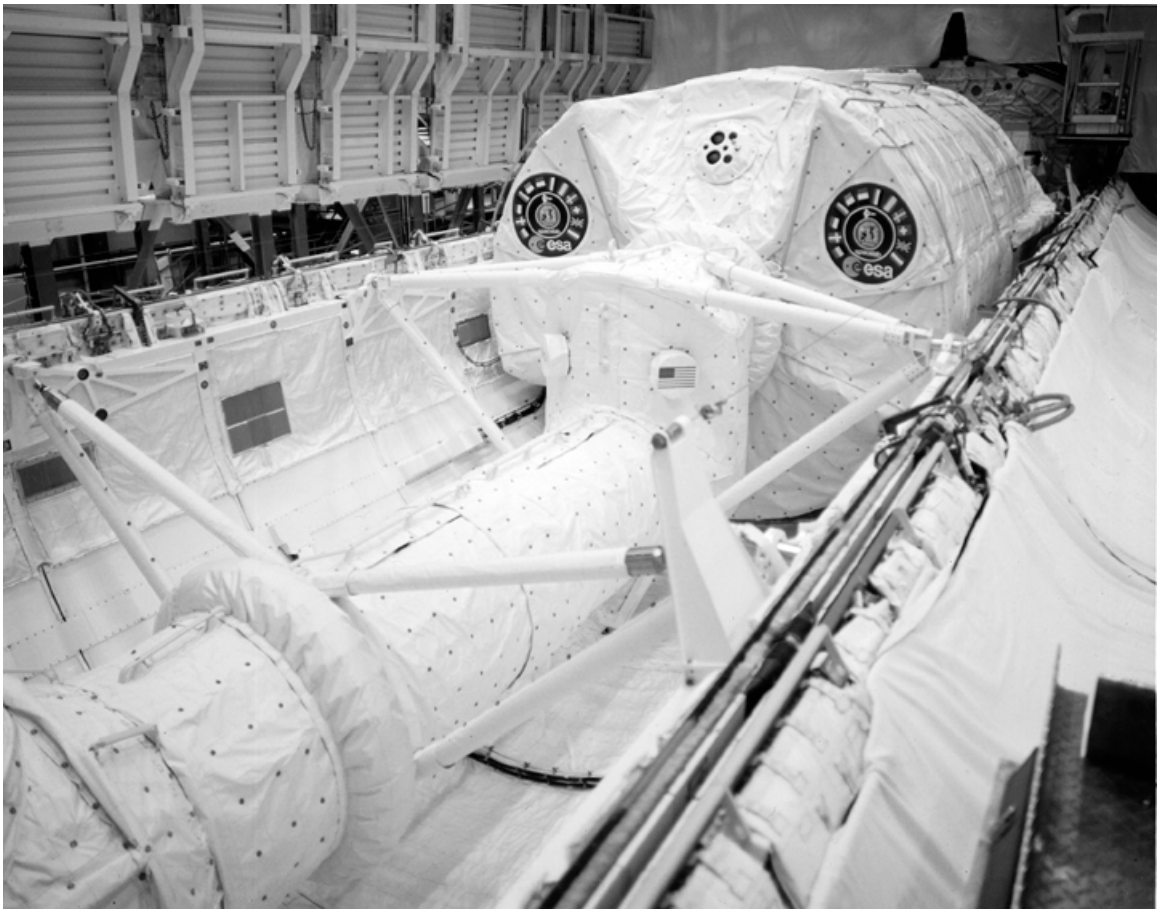

Figure No. A-19. View of Spacelab being installed inside of *Columbia's* payload bay for the STS-9 mission, November 28, 1983.
Source: NASA Marshall Space Flight Center, MSFC-8438476, accessed May 2012, at http://mix.msfc.nasa.gov/IMAGES/MEDIUM/8438476.jpg.

Figure No. A-20. Deployment of the Hubble Space Telescope during STS-31, April 29, 1990. Source: NASA Johnson Space Center, STS031-03-009, accessed May 2012, at http://images.jsc.nasa.gov/lores/STS031-03-009.jpg.

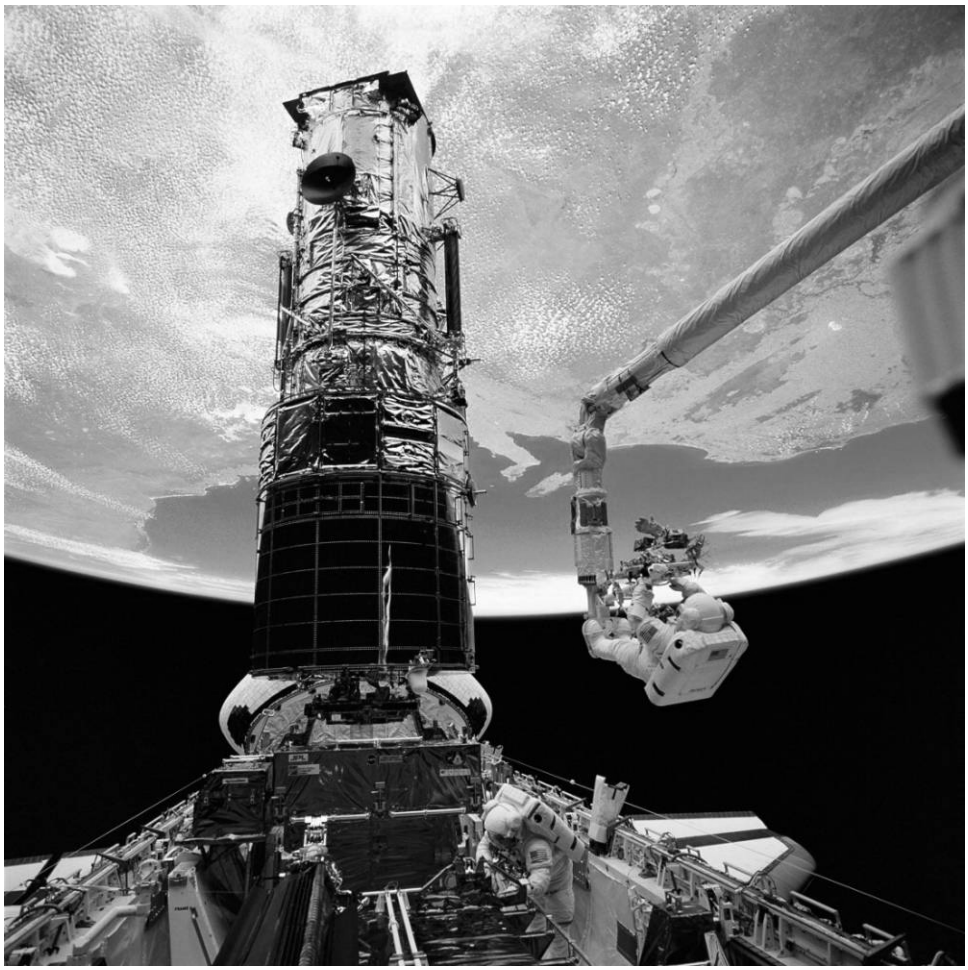

Figure No. A-21. Hubble Space Telescope Upgrade, December 9, 1993.
Astronaut F. Story Musgrave, anchored on the end of the RMS arm, prepares to be elevated to the top of the HST to install protective covers on the magnetometers.
Source: NASA, accessed May 2012, at
http://www.nasa.gov/images/content/439550main_sts061-98-050-full_full.jpg.

Figure No. A-22. View of *Discovery* without her FRCS module and OMS pods, which were sent to the White Sands Test Facility in New Mexico for deservicing and cleaning as part of the shuttle transition and retirement efforts, July 13, 2011.
Source: NASA Kennedy Space Center, KSC-2011-5572, accessed May 2012, at http://mediaarchive.ksc.nasa.gov.

Figure No. A-23. Installation of the shuttle orbiter repackaged galley into *Discovery's* middeck. The galley was removed following *Discovery's* last mission, and sent to Houston, where it was cleaned and deserviced by USA as part of the shuttle transition and retirement efforts, November 15, 2011.
Source: NASA Kennedy Space Center, KSC-2011-7774, accessed May 2012, at http://mediaarchive.ksc.nasa.gov.

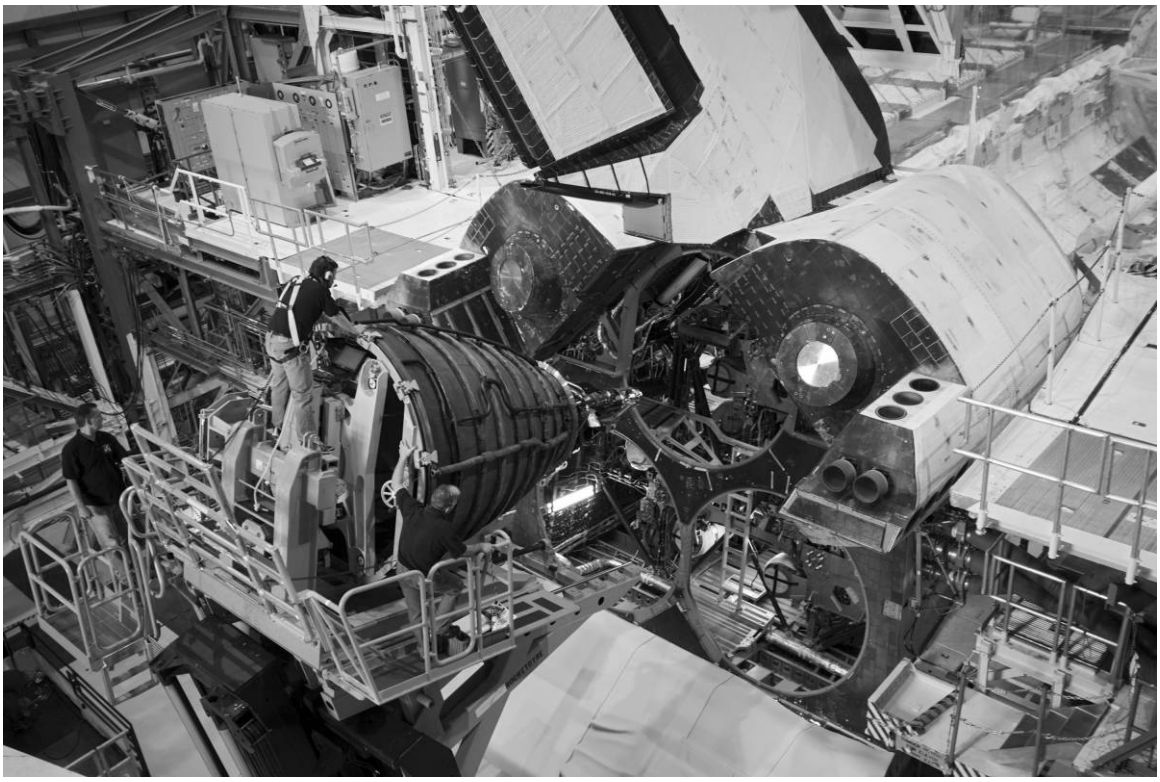

Figure No. A-24. Installation of a replica shuttle main engine into *Discovery's* aft fuselage. Three replica engines were installed as part of the shuttle transition and retirement efforts, December 5, 2011.
Source: NASA Kennedy Space Center, KSC-2011-8168, accessed May 2012, at http://mediaarchive.ksc.nasa.gov.

Figure No. A-25. One of *Discovery's* fuel cells being reinstalled following drain and purge operations conducted as part of the shuttle transition and retirement efforts, December 9, 2011. Source: NASA Kennedy Space Center, KSC-2011-8202, accessed May 2012, at http://mediaarchive.ksc.nasa.gov.

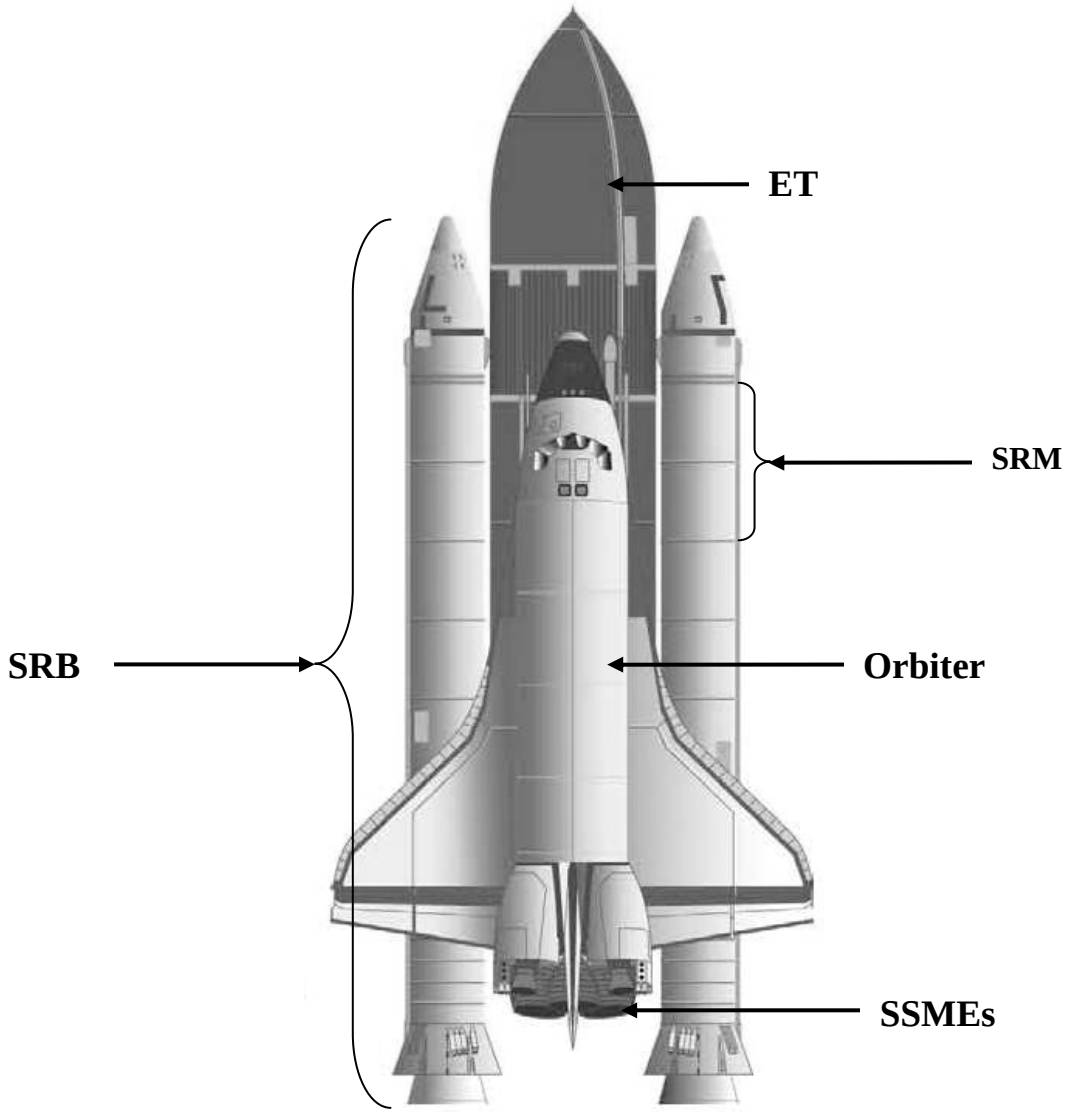

Figure No. A-26. The Space Transportation System.
Source: NASA, *Space Shuttle Era Facts*, page 1, with additions by ACI.

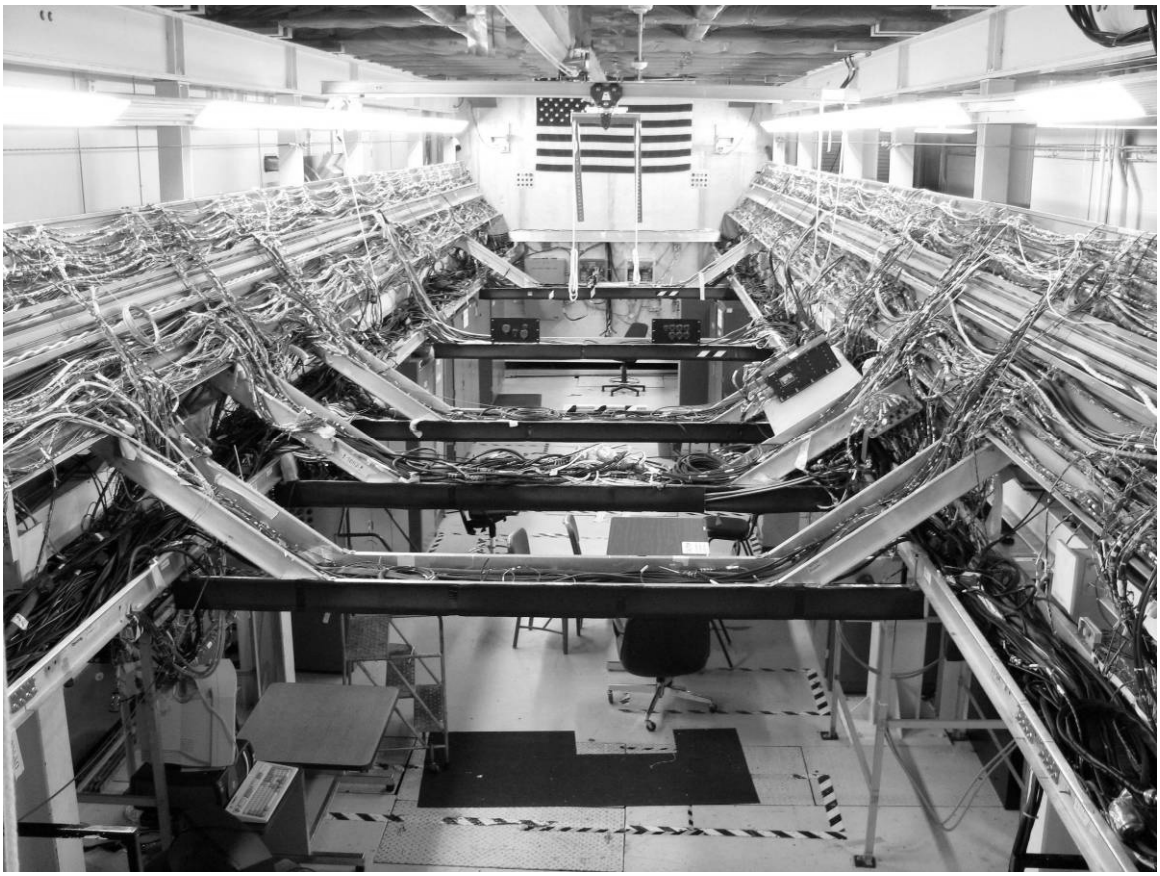

Figure No. A-27. “Big Rig” orbiter forward bay in Building 16 at the JSC, looking north. Source: Archaeological Consultants, Inc., 2009.

Figure No. A-28. STA-099 at Lockheed Martin for testing, February 17, 1978.
Source: NASA, Johnson Space Center Image Repository, JSC2010-02304.

Figure No. A-29. Rollout of *Columbia* from High Bay 2, AFP 42, for transport to DFRC, March 8, 1979.
Source: NASA, Johnson Space Center/Boeing, Huntington Beach, California, A790308P-3C.

Figure No. A-30. View of *Challenger* at liftoff for her maiden voyage, April 4, 1983. Source: NASA Kennedy Space Center, KSC-83PC-0137, accessed May 2012, at http://mediaarchive.ksc.nasa.gov.

Figure No. A-31. *Atlantis* landing at Edwards AFB following her second mission, December 3, 1985.
Source: NASA Johnson Space Center, STS61B(S)070, accessed May 2012, at http://images.jsc.nasa.gov/lores/STS61B%28S%29070.jpg.

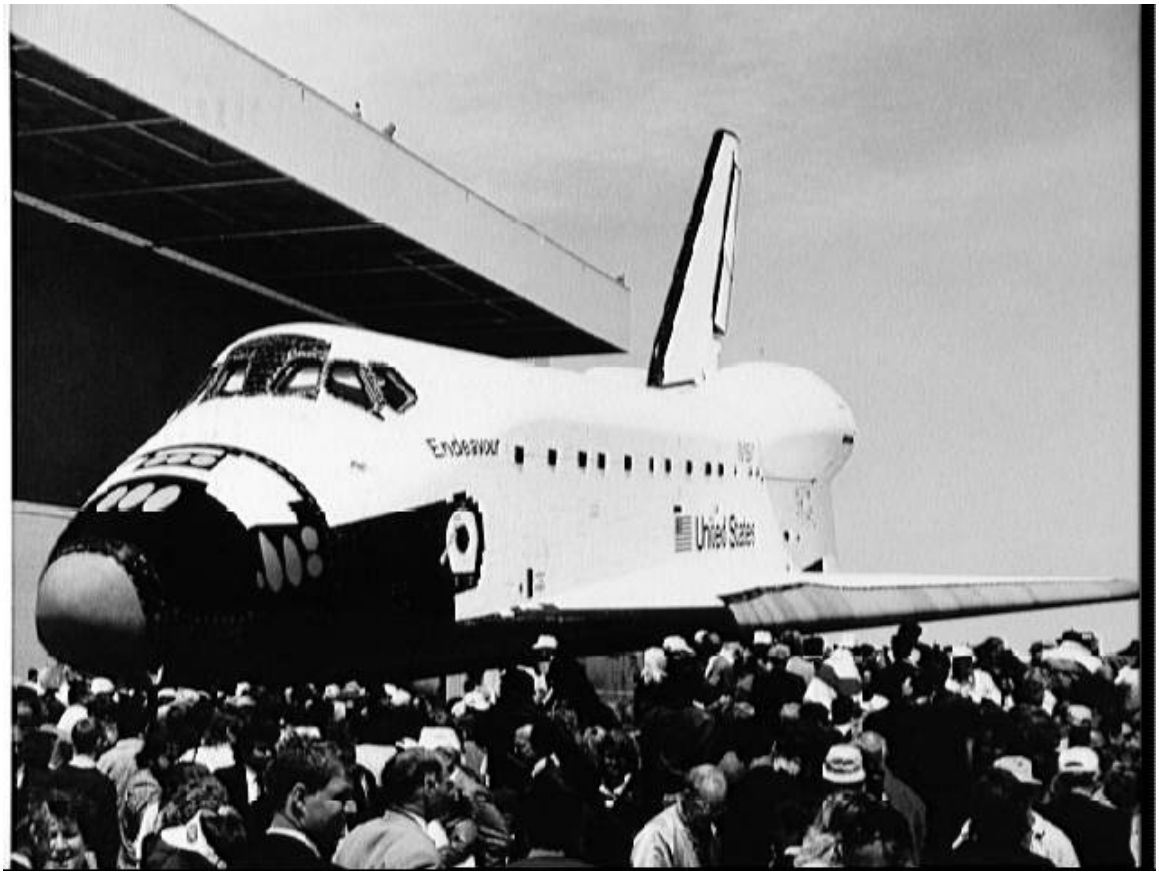

Figure No. A-32. *Endeavour* (OV-105) roll-out at Palmdale, California, May 6, 1991. Source: NASA, Johnson Space Center, S91-36157, accessed May 2012, at http://images.jsc.nasa.gov/lores/S91-36157.jpg.

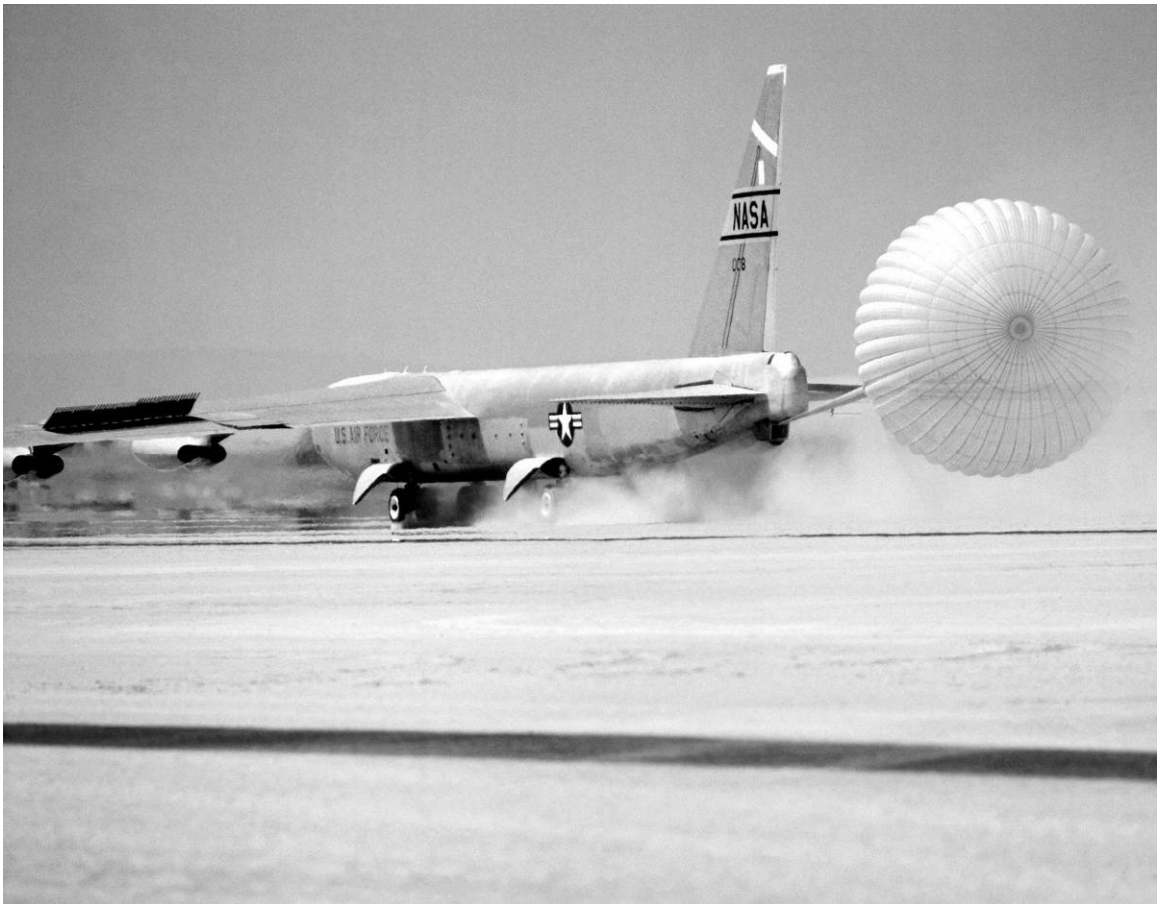

Figure No. A-33. A B-52 testing the Developmental Space Shuttle drag chute, 1990. Source: NASA Dryden Flight Research Center, EC90-225-30, accessed May 2012, at http://www.dfrc.nasa.gov/gallery/photo/B-52/Small/EC90-225-30.jpg.

Figure No. A-34. SCA N911NA, looking northeast, Dryden Flight Research Center.
Source: Archaeological Consultants, Inc. 2006.

Figure No. A-35. SCA N905NA, interior, Dryden Flight Research Center.
Source: Archaeological Consultants, Inc. 2006.

Appendix B-Orbiter Historic Photos

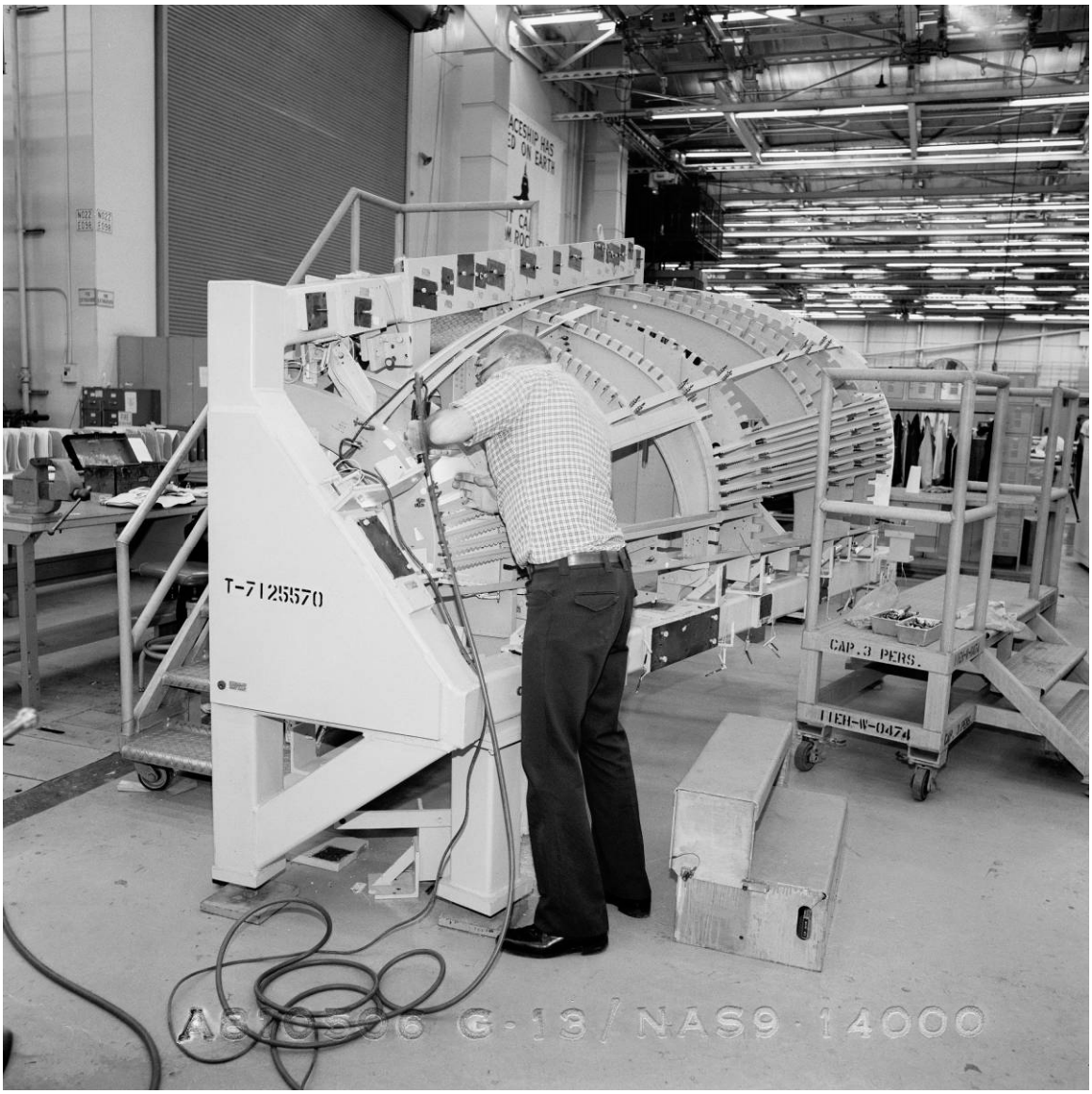

Figure B-1. Manufacturing of *Discovery's* lower forward fuselage, NAR Building 290, Downey, California, May 6, 1981.
Source: NASA, Johnson Space Center Image Repository, JSC2010-03096.

Figure B-2. Manufacturing of *Discovery's* lower forward fuselage, NAR Building 290, Downey, California, November 10, 1981.
Source: NASA, Johnson Space Center Image Repository, JSC2010-03198.

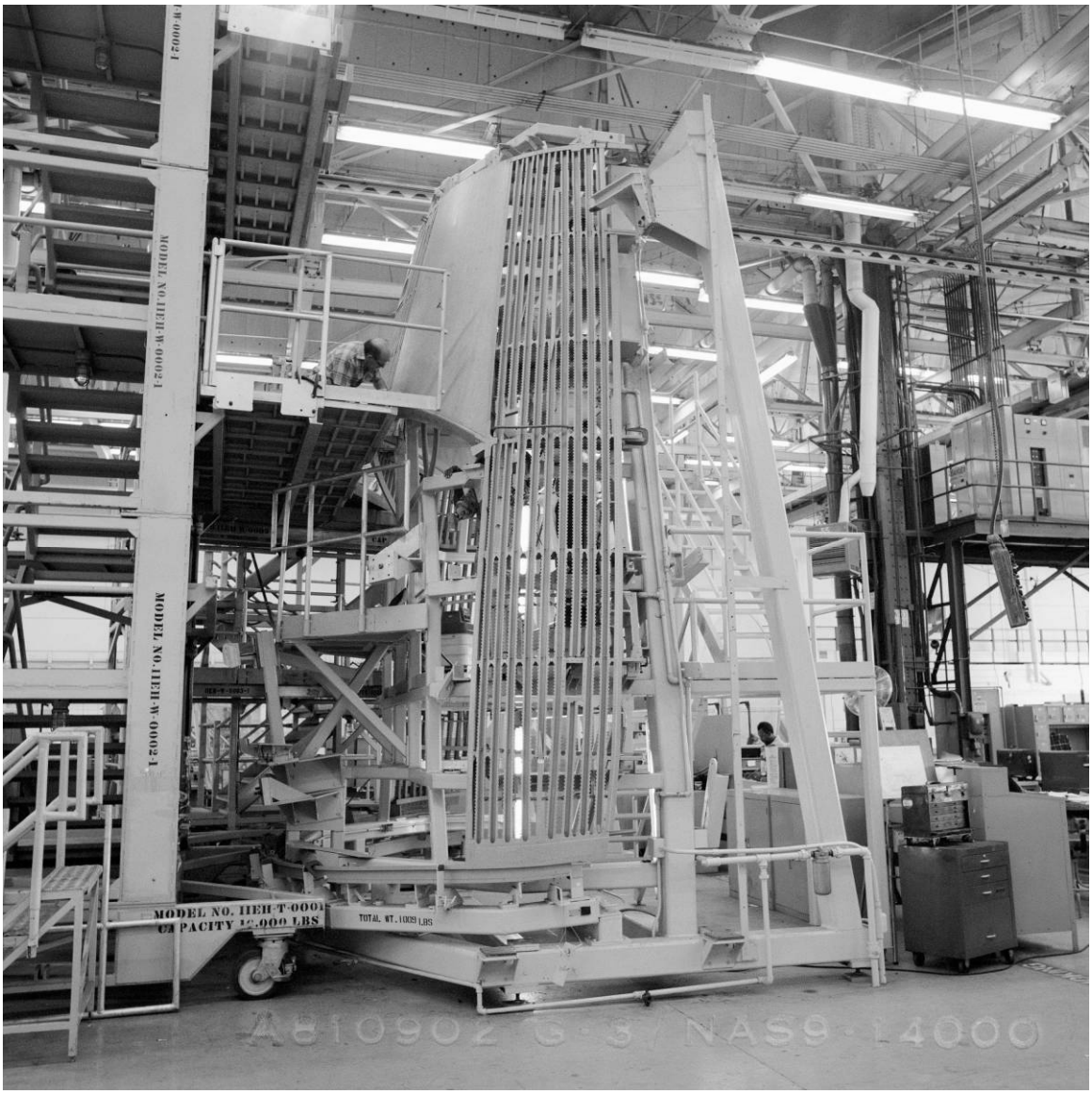

Figure B-3. Manufacturing of *Discovery's* upper forward fuselage, NAR Building 290, Downey, California, September 2, 1981.
Source: NASA, Johnson Space Center Image Repository, JSC2010-03146.

Figure B-4. Manufacturing of *Discovery's* upper forward fuselage, NAR Building 290, Downey, California, November 20, 1981.
Source: NASA, Johnson Space Center Image Repository, JSC2010-03204.

Figure B-5. Manufacturing of *Discovery's* crew module aft bulkhead, NAR Building 290, Downey, California, February 26, 1981.
Source: NASA, Johnson Space Center Image Repository, JSC2010-03081.

Figure B-6. Upper skin panel assembly for *Discovery's* crew module, NAR Building 290, Downey, California, June 10, 1981.
Source: NASA, Johnson Space Center Image Repository, JSC2010-03105.

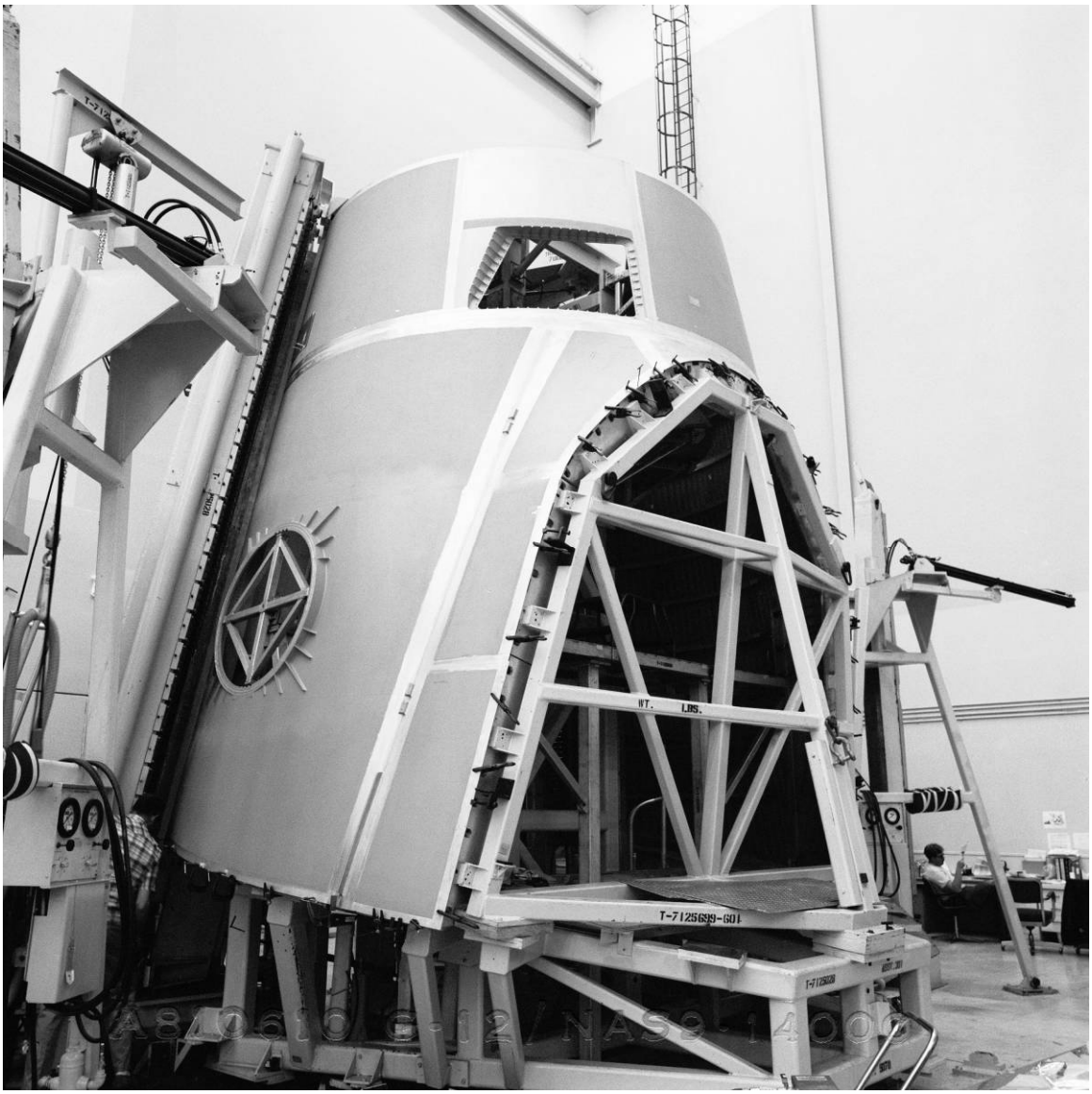

Figure B-7. Intermediate structure assembly for *Discovery's* crew module, NAR Building 290, Downey, California, June 10, 1981.
Source: NASA, Johnson Space Center Image Repository, JSC2010-03104.

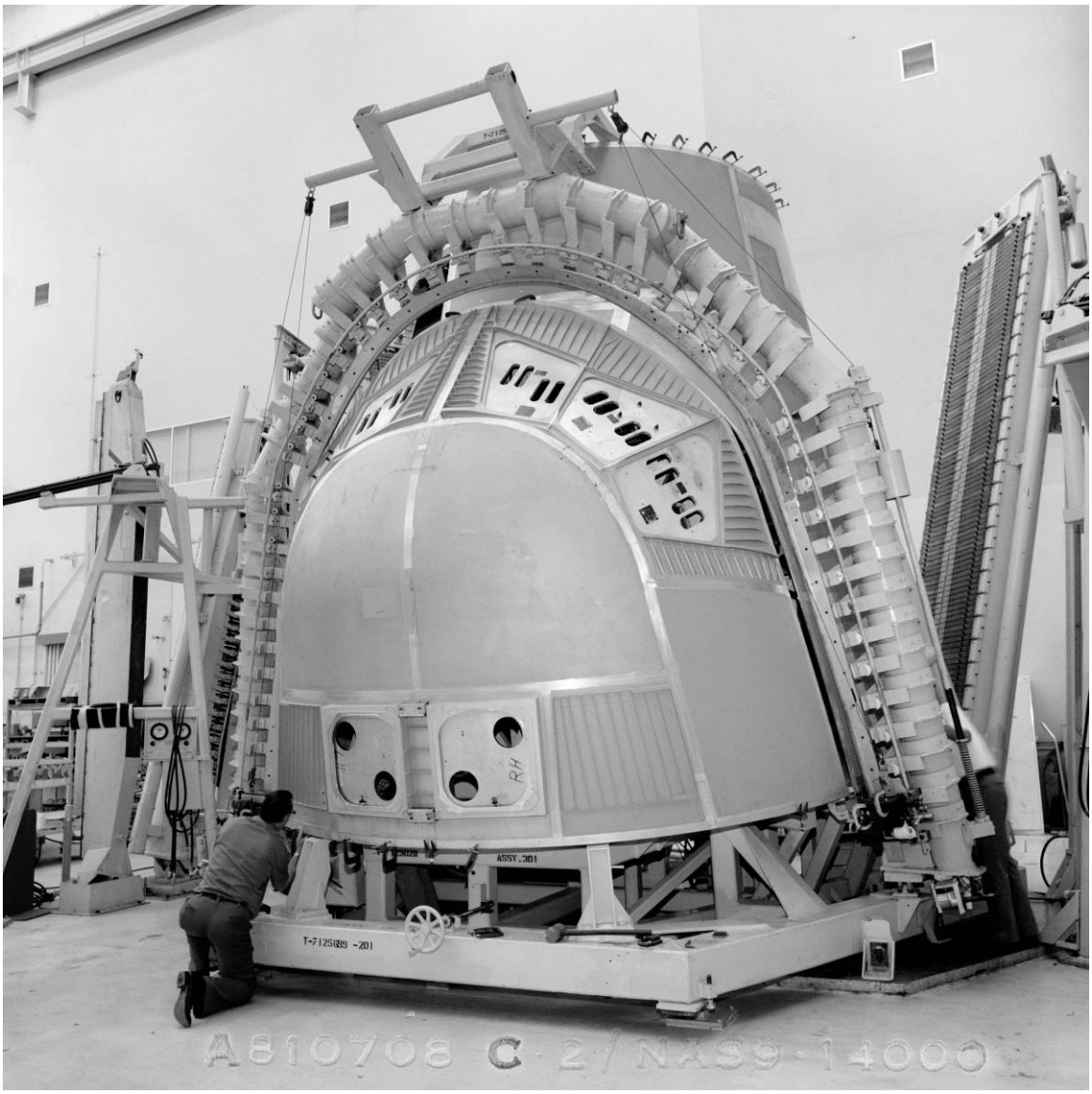

Figure B-8. Primary structure assembly for *Discovery's* crew module in weld tool, NAR Building 290, Downey, California, July 8, 1981.
Source: NASA, Johnson Space Center Image Repository, JSC2010-03119.

Figure B-9. Manufacturing operations on *Discovery's* flight deck, NAR Building 290, Downey, California, March 9, 1982.
Source: NASA, Johnson Space Center Image Repository, JSC2010-03245.

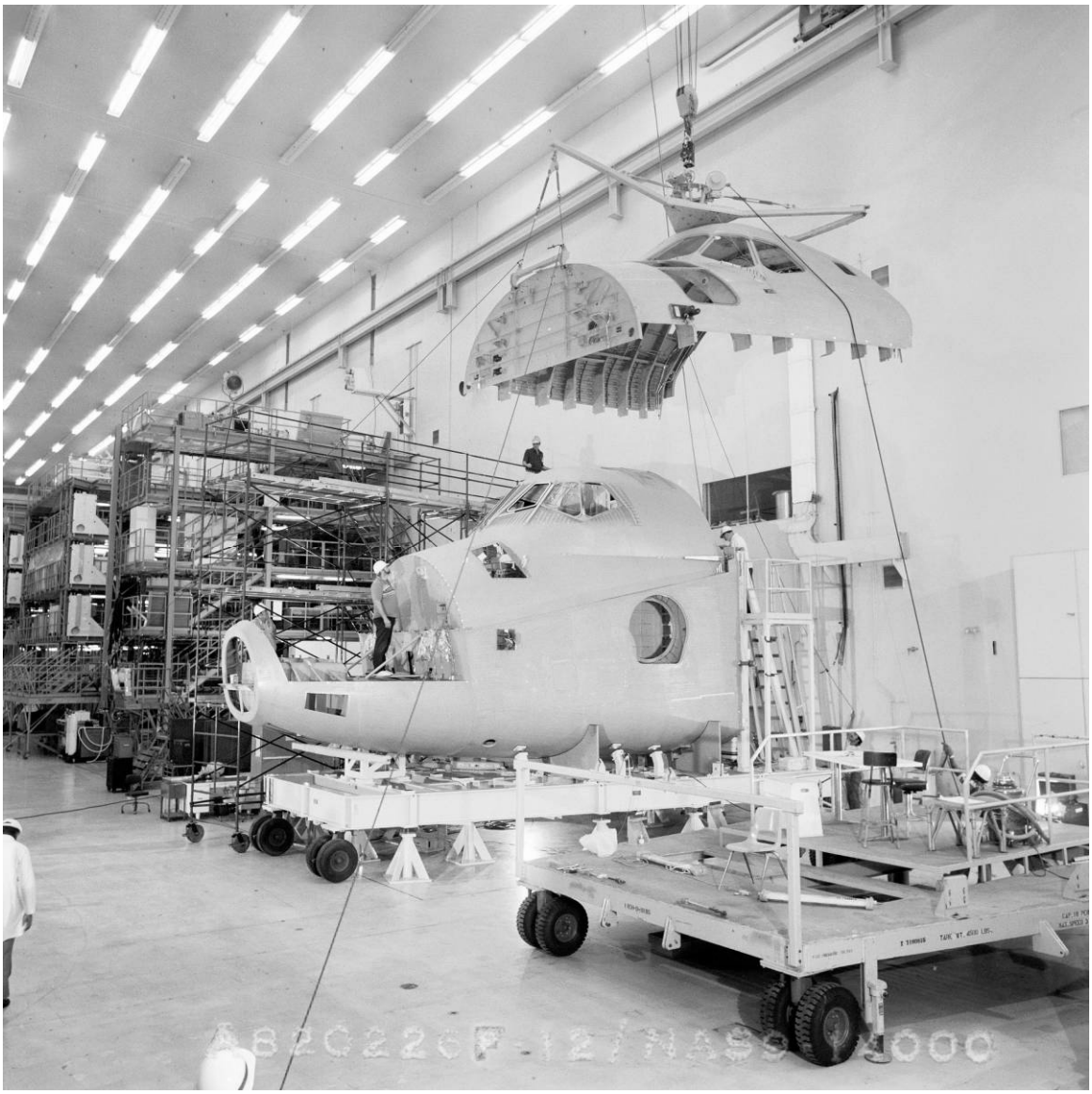

Figure B-10. Fit check of *Discovery's* crew module, lower forward fuselage, and upper forward fuselage, NAR Building 290, Downey, California, February 26, 1982.
Source: NASA, Johnson Space Center Image Repository, JSC2010-03237.

Figure B-11. Manufacturing operations on *Discovery's* middeck, NAR Building 290, Downey, California, March 9, 1982.
Source: NASA, Johnson Space Center Image Repository, JSC2010-03244.

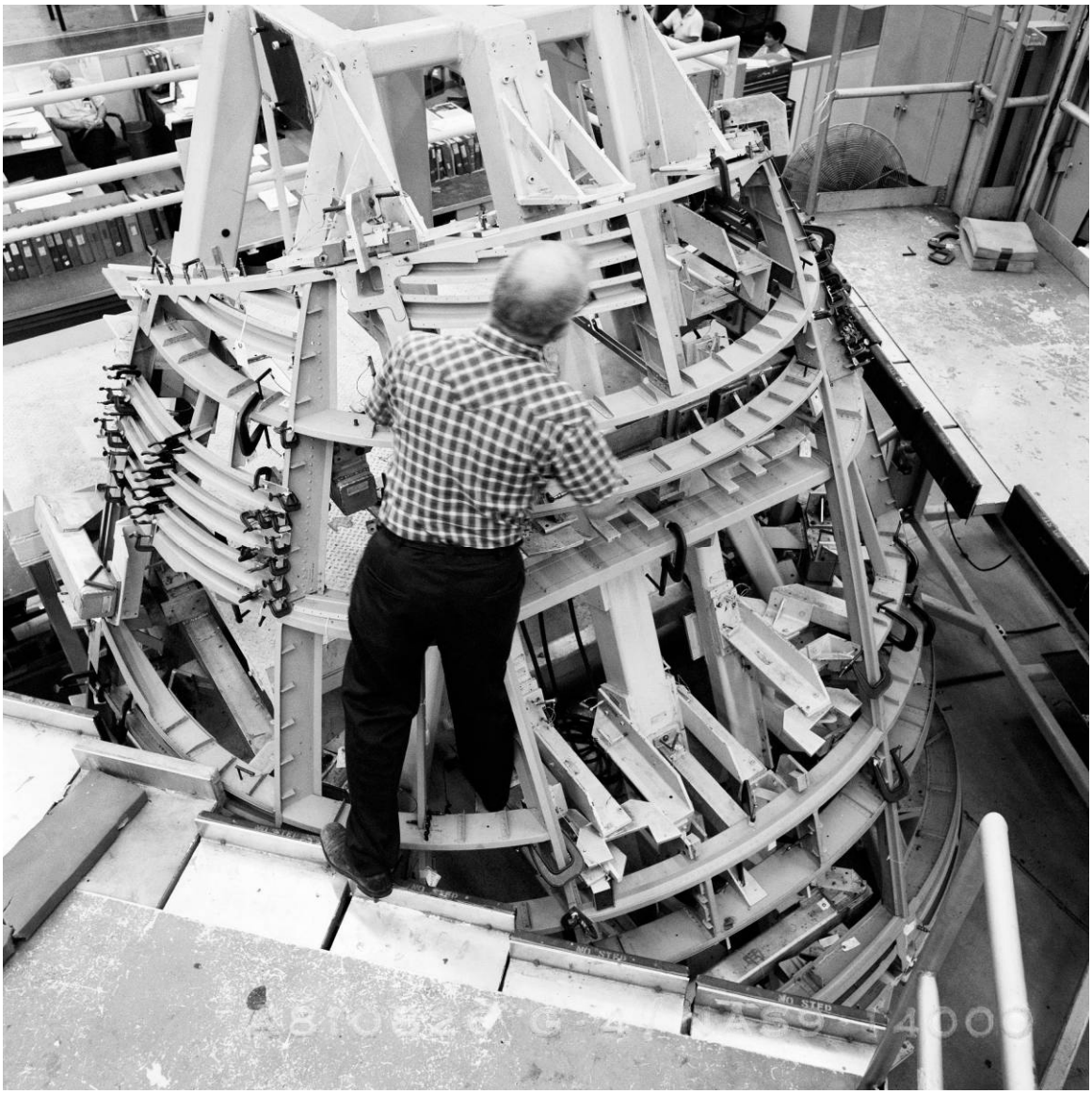

Figure B-12. Manufacturing of *Discovery's* FRCS module, NAR Building 1, Downey, California, August 26, 1981.
Source: NASA, Johnson Space Center Image Repository, JSC2010-03142.

Figure B-13. Manufacturing of *Discovery's* FRCS module, NAR Building 1, Downey, California, January 22, 1982.
Source: NASA, Johnson Space Center Image Repository, JSC2010-03228.

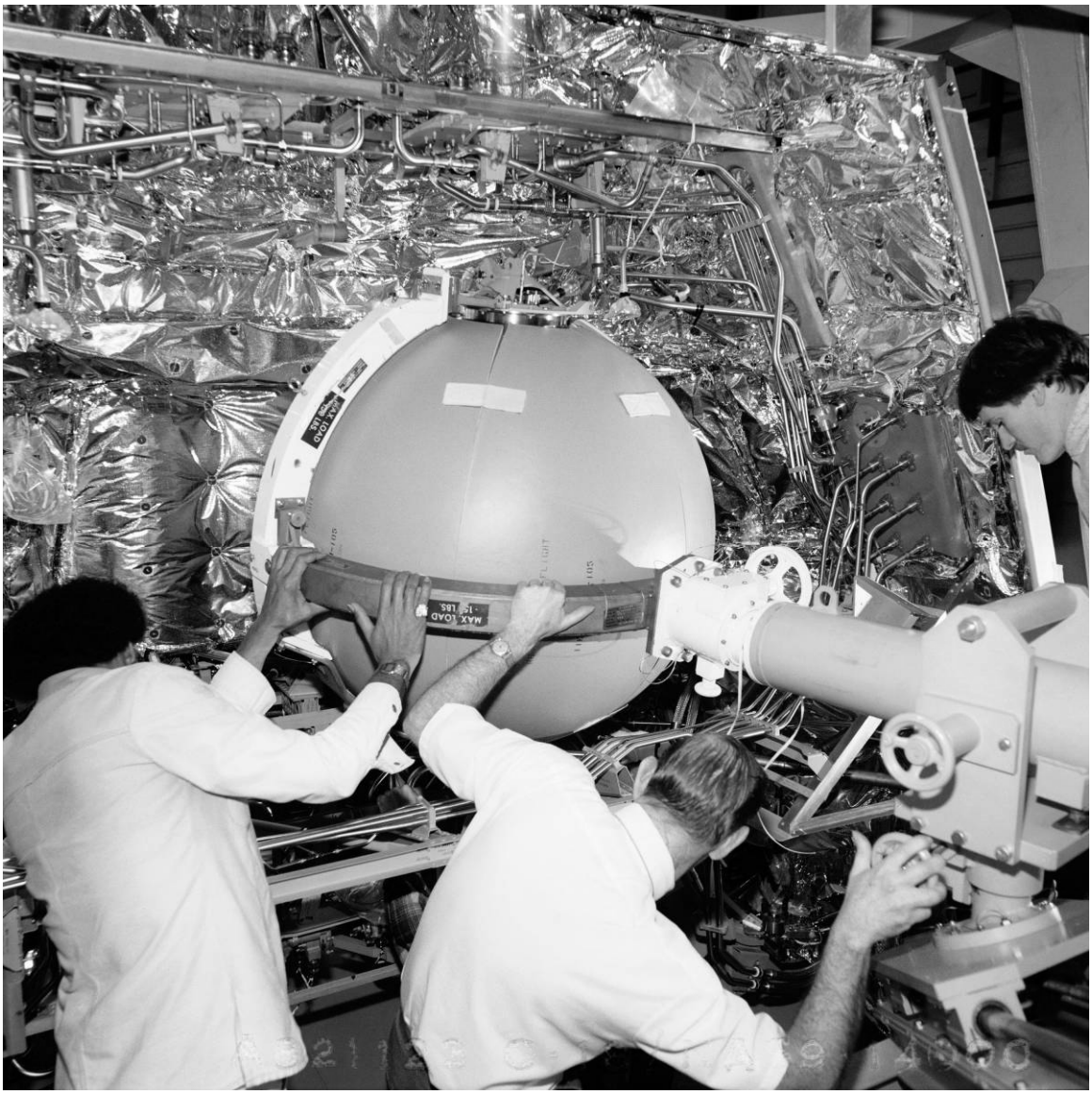

Figure B-14. Fuel tank being installed into *Discovery's* FRCS module, NAR Building 1, Downey, California, November 23, 1982.
Source: NASA, Johnson Space Center Image Repository, JSC2010-03369.

Figure B-15. Manufacturing of a vertical truss for the thrust structure of *Discovery's* aft fuselage, NAR Building 1, Downey, California, April 23, 1981.
Source: NASA, Johnson Space Center Image Repository, JSC2010-03093.

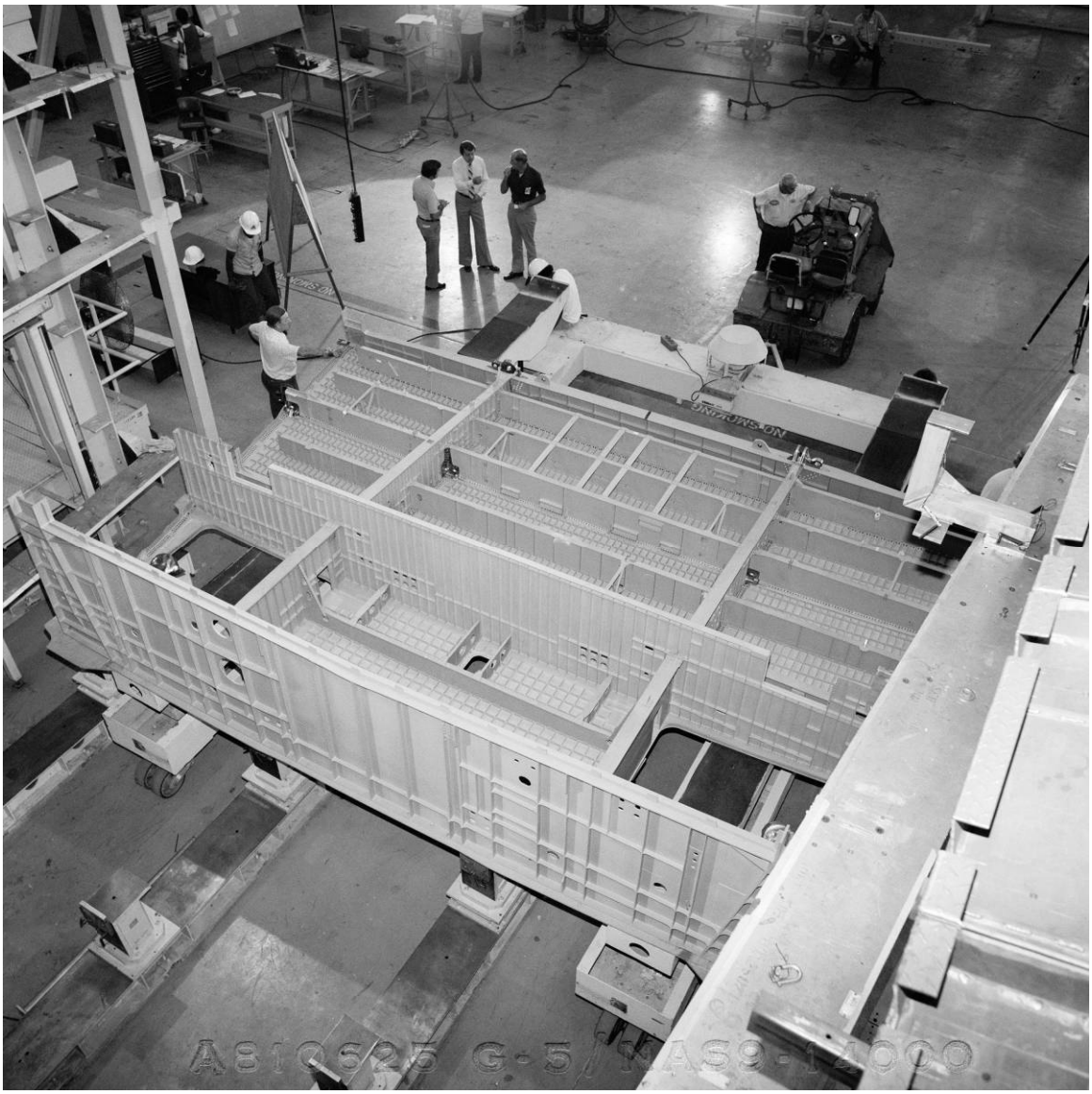

Figure B-16. Manufacturing of the lower structure assembly for *Discovery's* aft fuselage, NAR Building 1, Downey, California, June 25, 1981.
Source: NASA, Johnson Space Center Image Repository, JSC2010-03110.

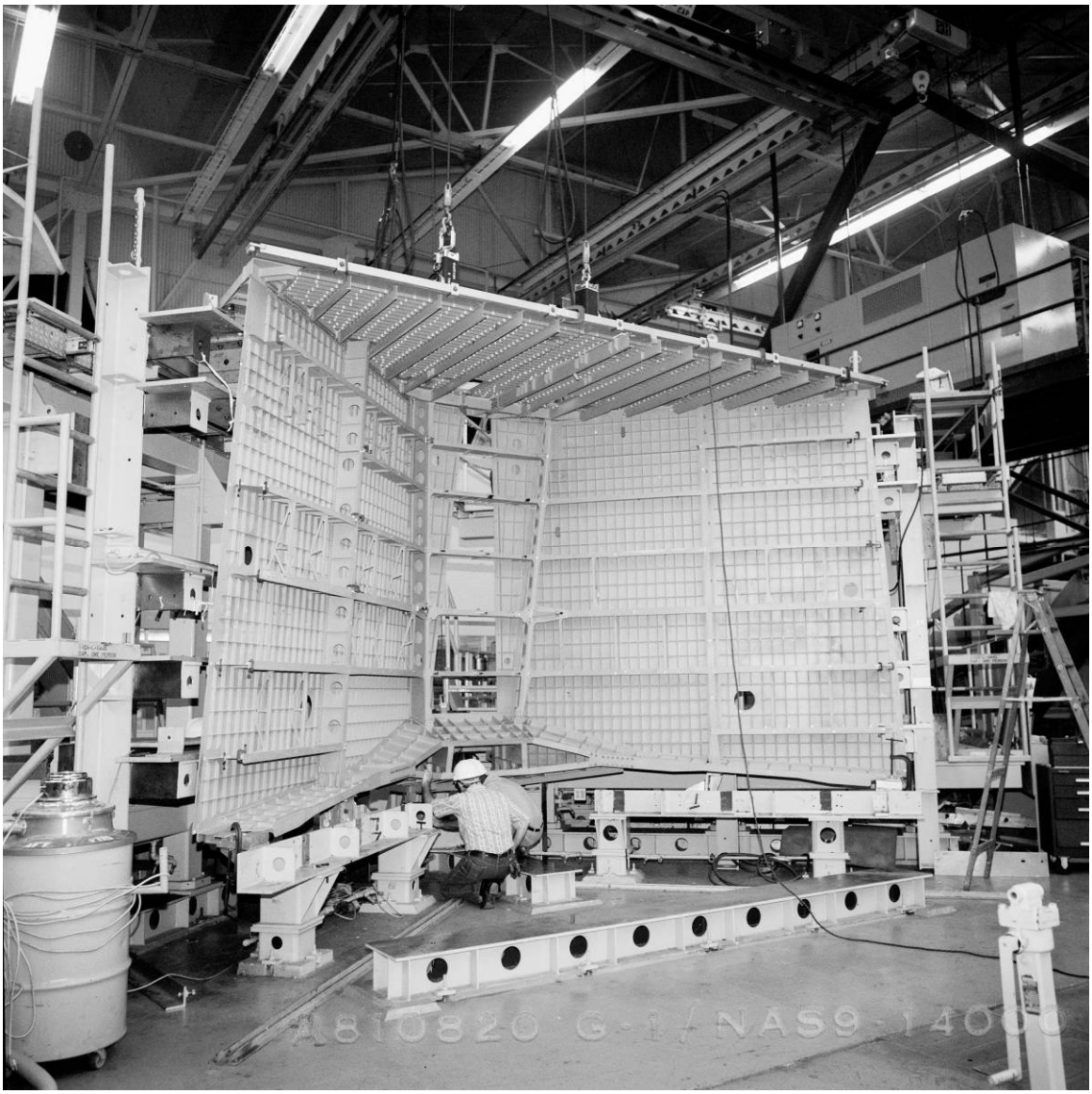

Figure B-17. Manufacturing of the upper structure assembly for *Discovery's* aft fuselage, NAR Building 1, Downey, California, August 20, 1981.
Source: NASA, Johnson Space Center Image Repository, JSC2010-03139.

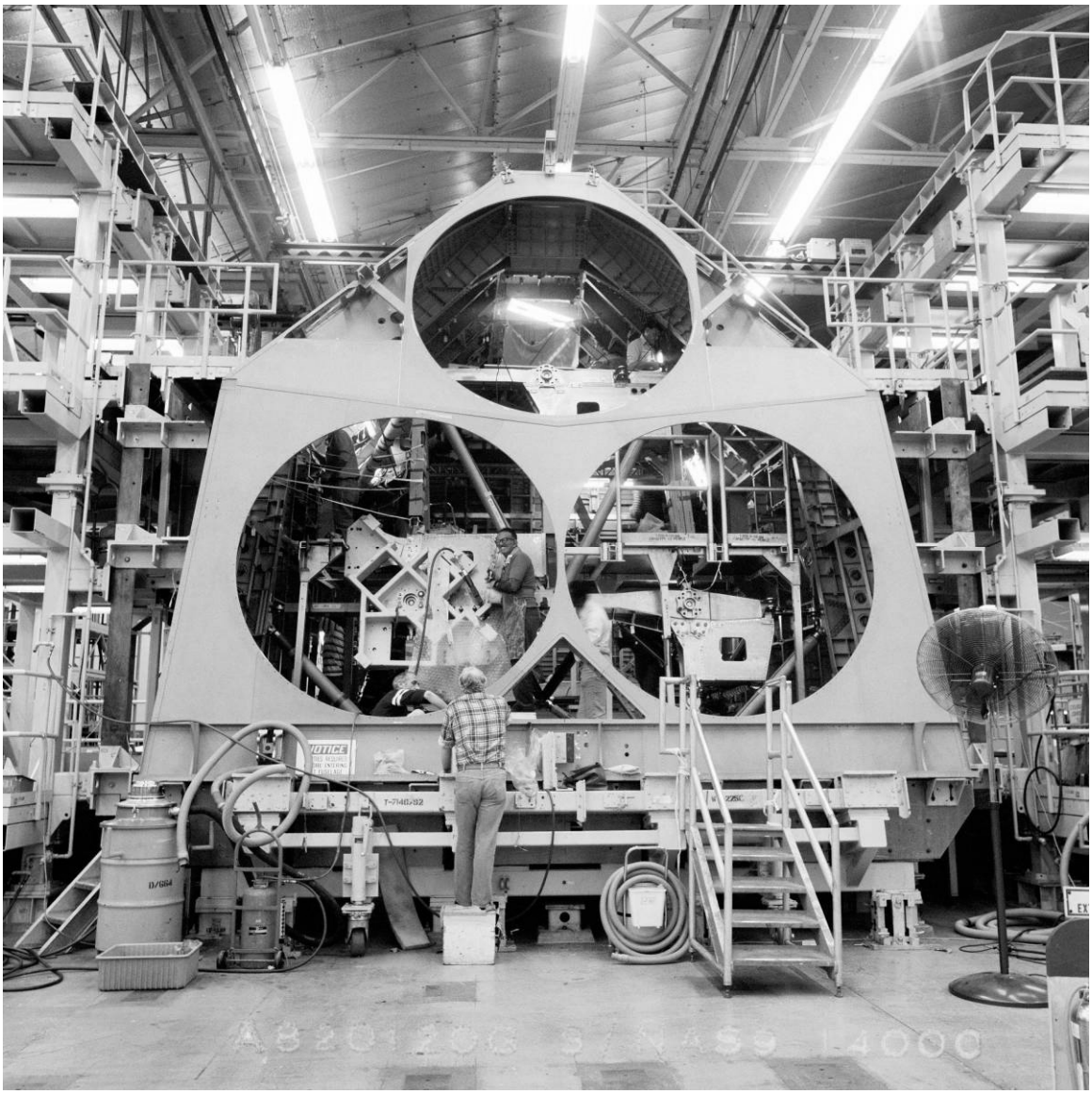

Figure B-18. Installation of aft heat shield to *Discovery's* aft fuselage, NAR Building 1, Downey, California, January 20, 1982.
Source: NASA, Johnson Space Center Image Repository, JSC2010-03226.

Figure B-19. Arrival of *Discovery's* midfuselage at AFP 42 for final assembly, March 16, 1982.
Source: NASA, Johnson Space Center Image Repository, JSC2010-03249.

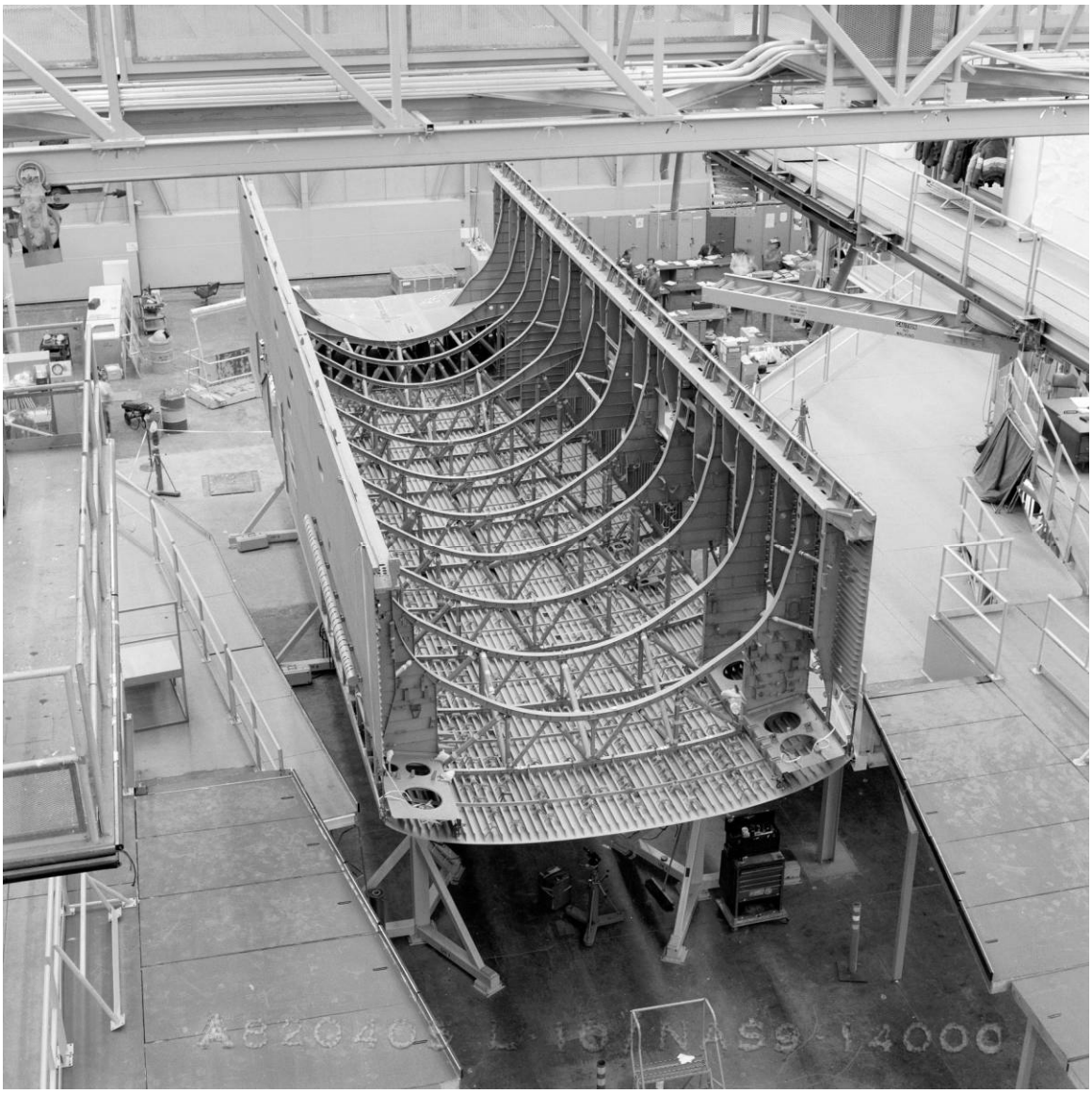

Figure B-20. *Discovery's* midfuselage in High Bay 2, AFP 42, April 5, 1982.
Source: NASA, Johnson Space Center Image Repository, JSC2010-03253.

Figure B-21. *Discovery's* port wing being offloaded from ship at the Los Angeles Harbor for delivery to AFP 42, April 29, 1982.
Source: NASA, Johnson Space Center Image Repository, JSC2010-03265.

Figure B-22. *Discovery's* port wing being offloaded from transporter at AFP 42, May 2, 1982.
Source: NASA, Johnson Space Center Image Repository, JSC2010-03283.

Figure B-23. *Discovery's* starboard wing being attached to the midfuselage in High Bay 2, AFP 42, May 8, 1982.
Source: NASA, Johnson Space Center Image Repository, JSC2010-03270.

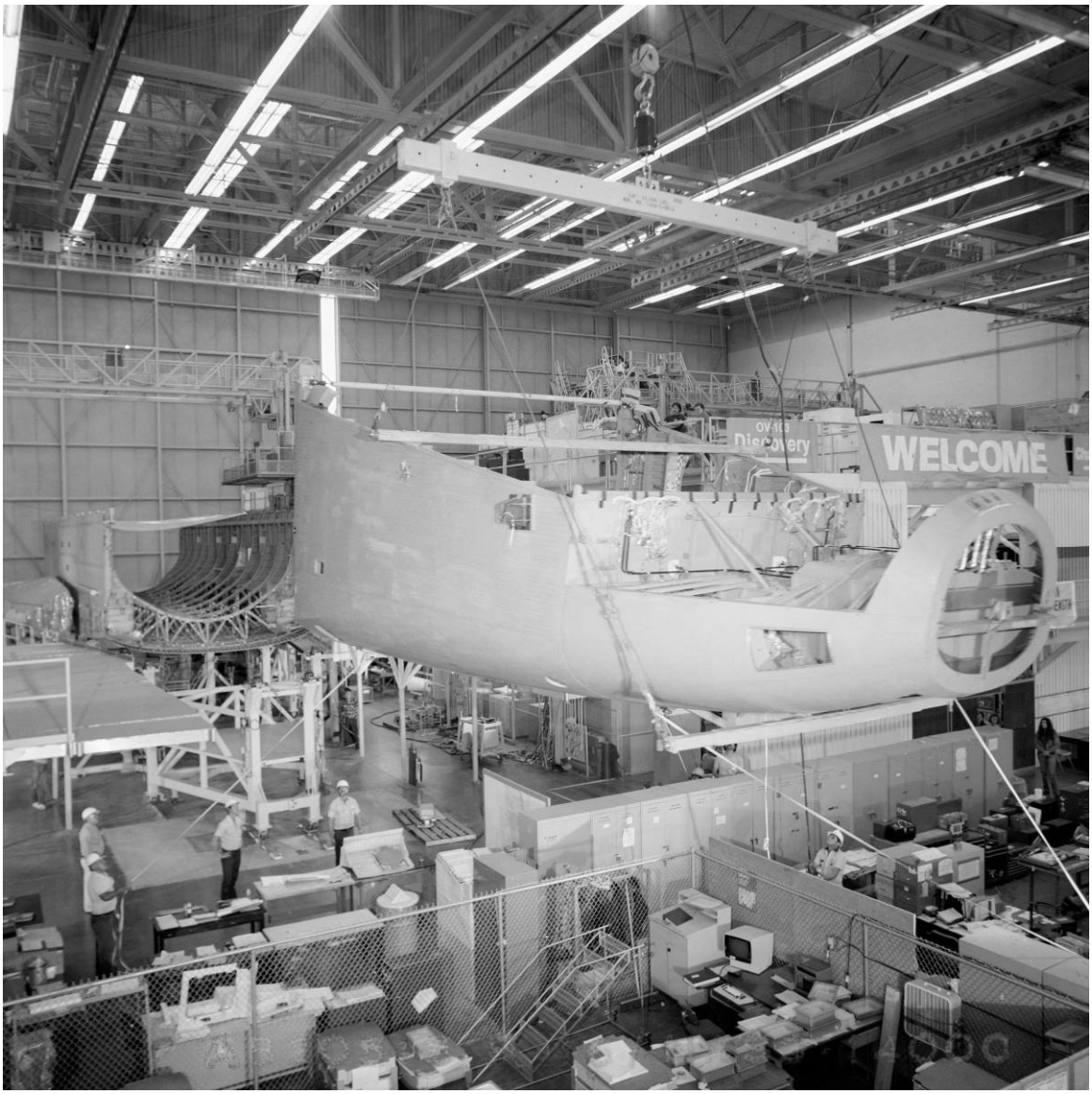

Figure B-24. *Discovery's* lower forward fuselage being attached to the midfuselage in High Bay 2, AFP 42, May 15, 1982.
Source: NASA, Johnson Space Center Image Repository, JSC2010-03282.

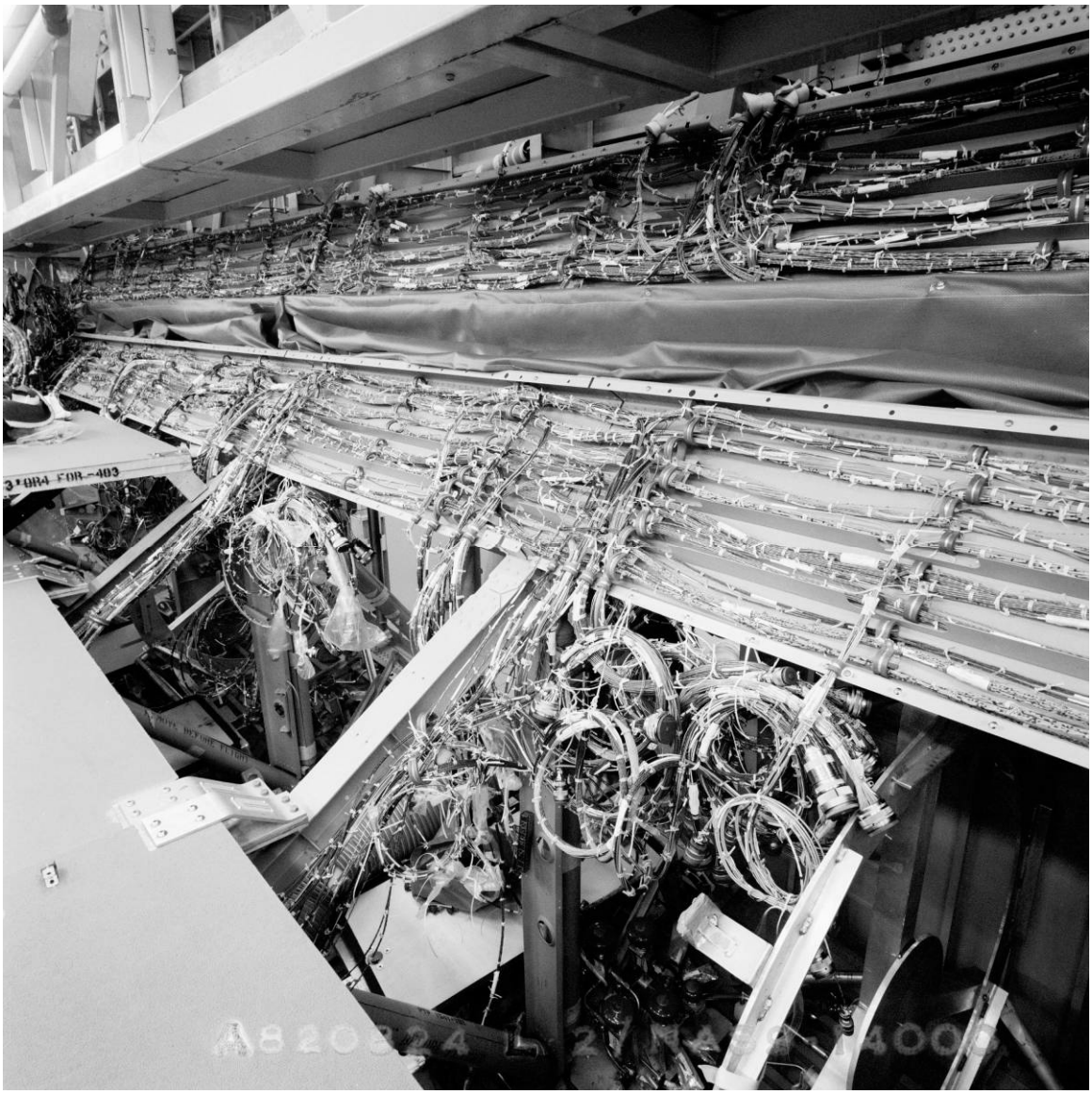

Figure B-25. Starboard wire harness being installed in *Discovery's* midfuselage in High Bay 2, AFP 42, August 24, 1982.
Source: NASA, Johnson Space Center Image Repository, JSC2010-03330.

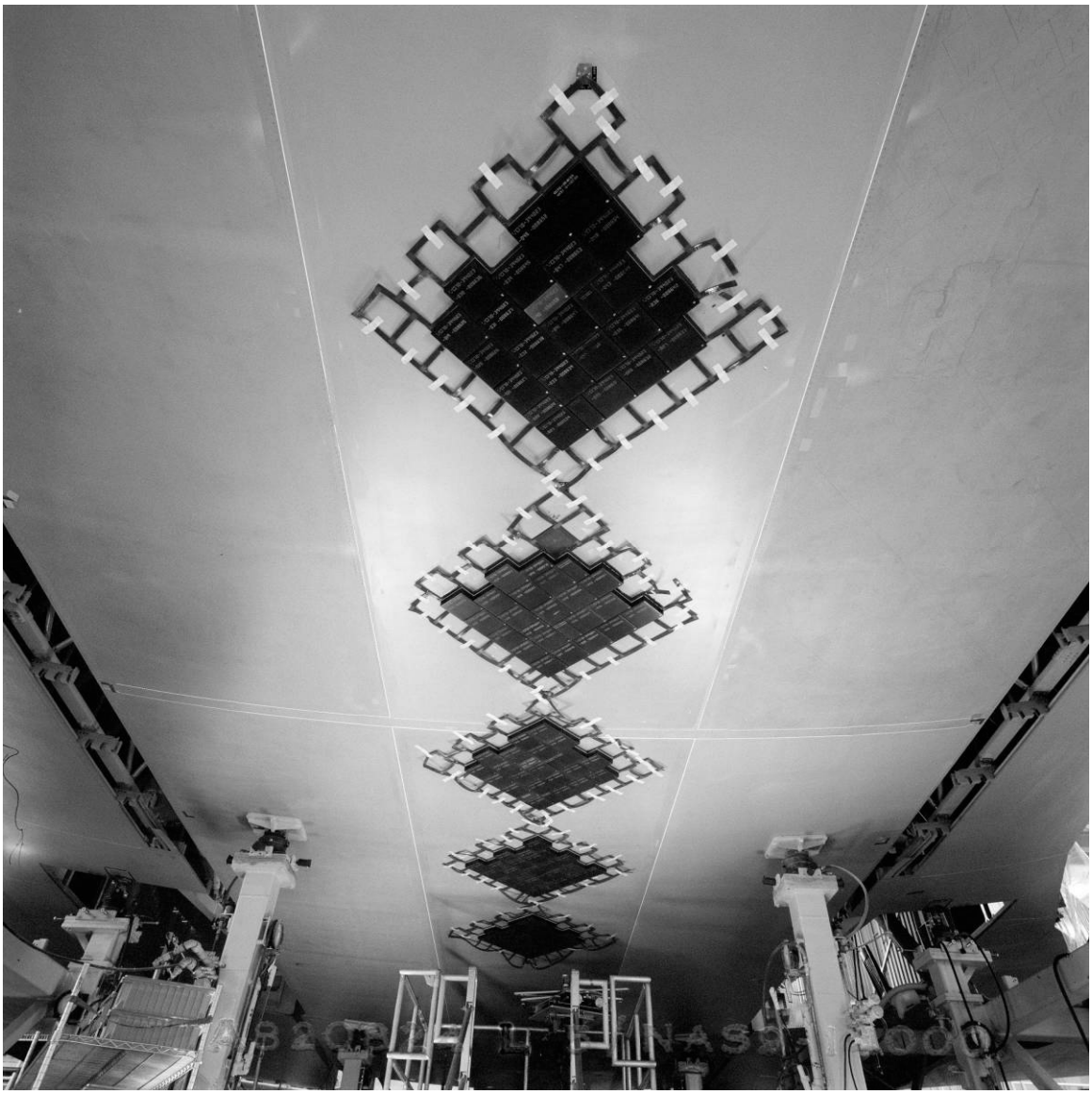

Figure B-26. HRSI tile being installed on the underside of *Discovery's* midfuselage in High Bay 2, AFP 42, August 24, 1982.
Source: NASA, Johnson Space Center Image Repository, JSC2010-03331.

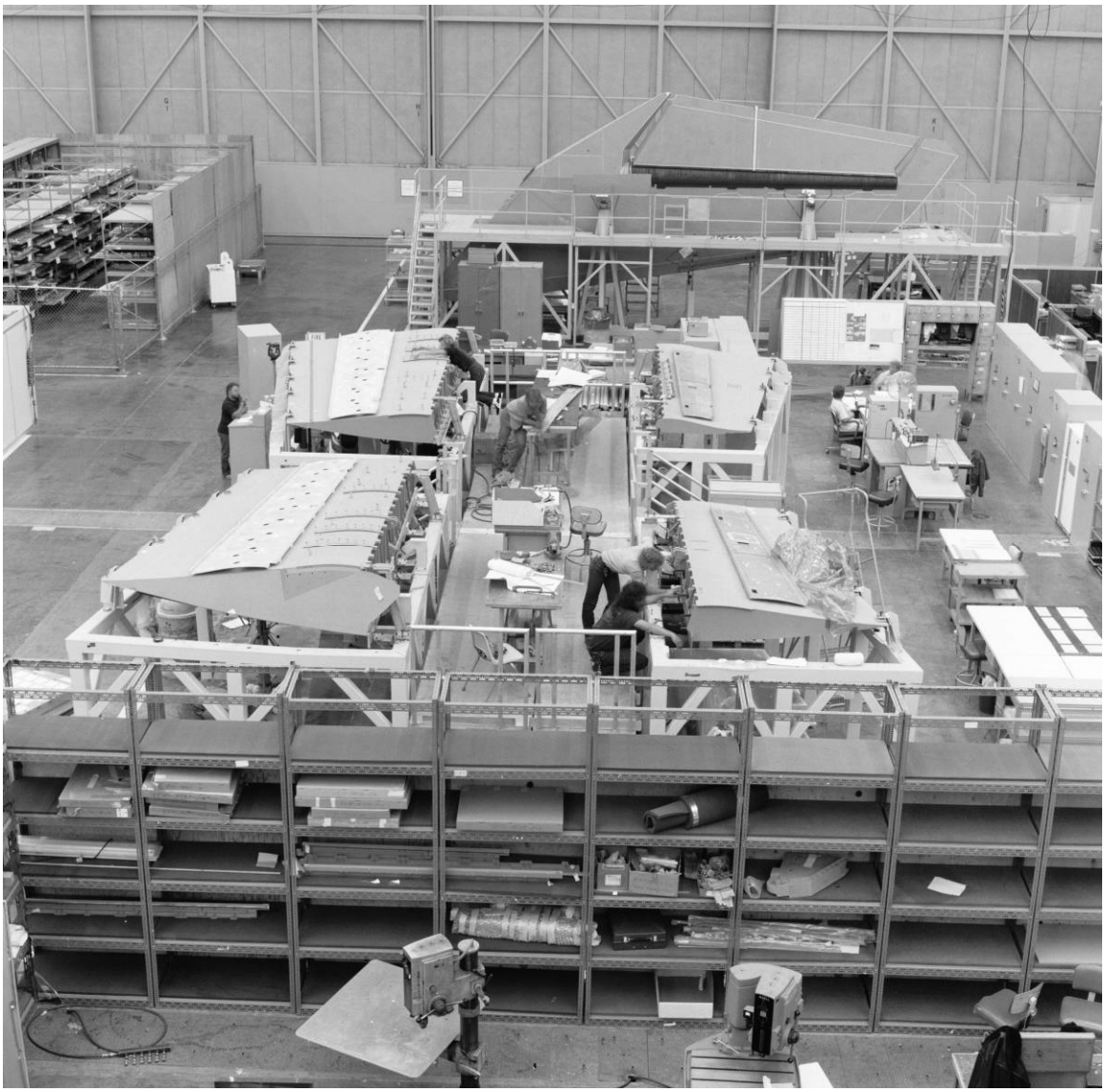

Figure B-27. Inspection of *Discovery's* elevons, High Bay 1, AFP 42,
September 14, 1982.
Source: NASA, Johnson Space Center/Boeing, Huntington Beach, California, A820914L-31C.

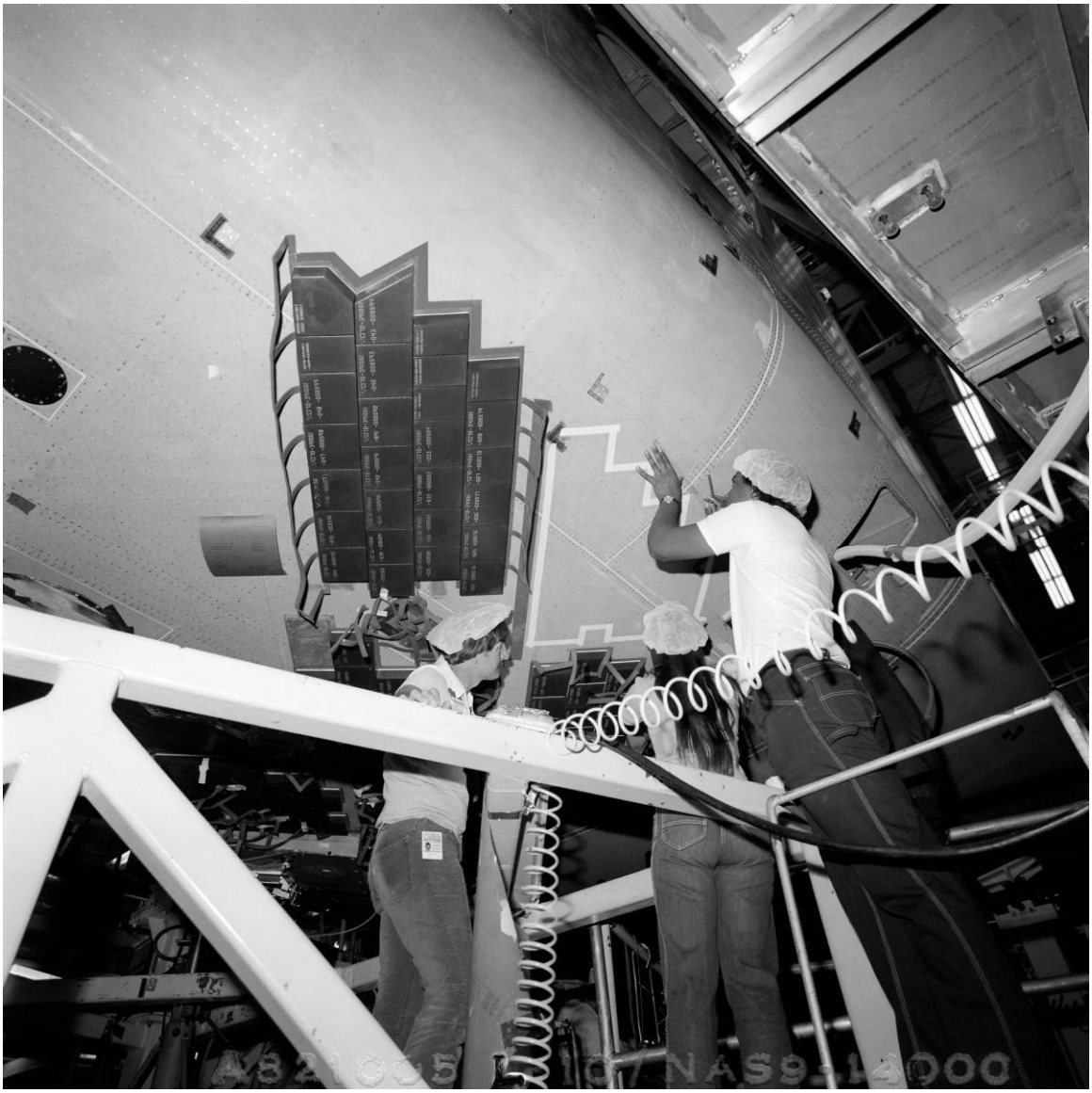

Figure B-28. HRSI installation on the underside of *Discovery's* lower forward fuselage in High Bay 2, AFP 42, October 5, 1982.
Source: NASA, Johnson Space Center Image Repository, JSC2010-03346.

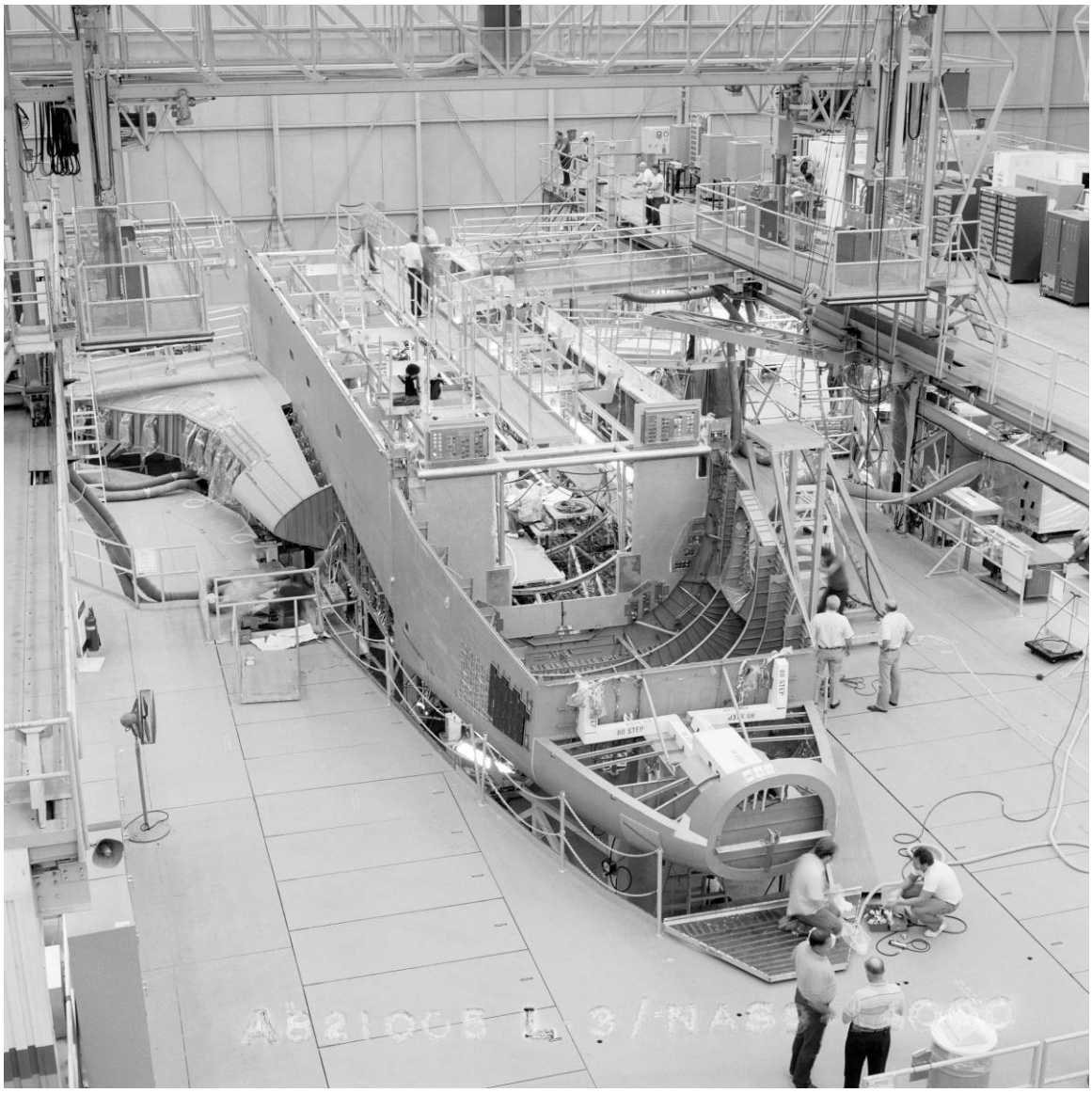

Figure B-29. *Discovery's* midfuselage DITMCO in High Bay 2, AFP 42, October 18, 1982.
Source: NASA, Johnson Space Center Image Repository, JSC2010-03344.

Figure B-30. Installation of TPS on *Discovery's* vertical stabilizer, AFP 42, October 19, 1982. Source: NASA, Johnson Space Center Image Repository, JSC2010-03353.

Figure B-31. Installation of wing leading edge on *Discovery's* port wing in High Bay 2, AFP 42, October 26, 1982.
Source: NASA, Johnson Space Center Image Repository, JSC2010-03575.

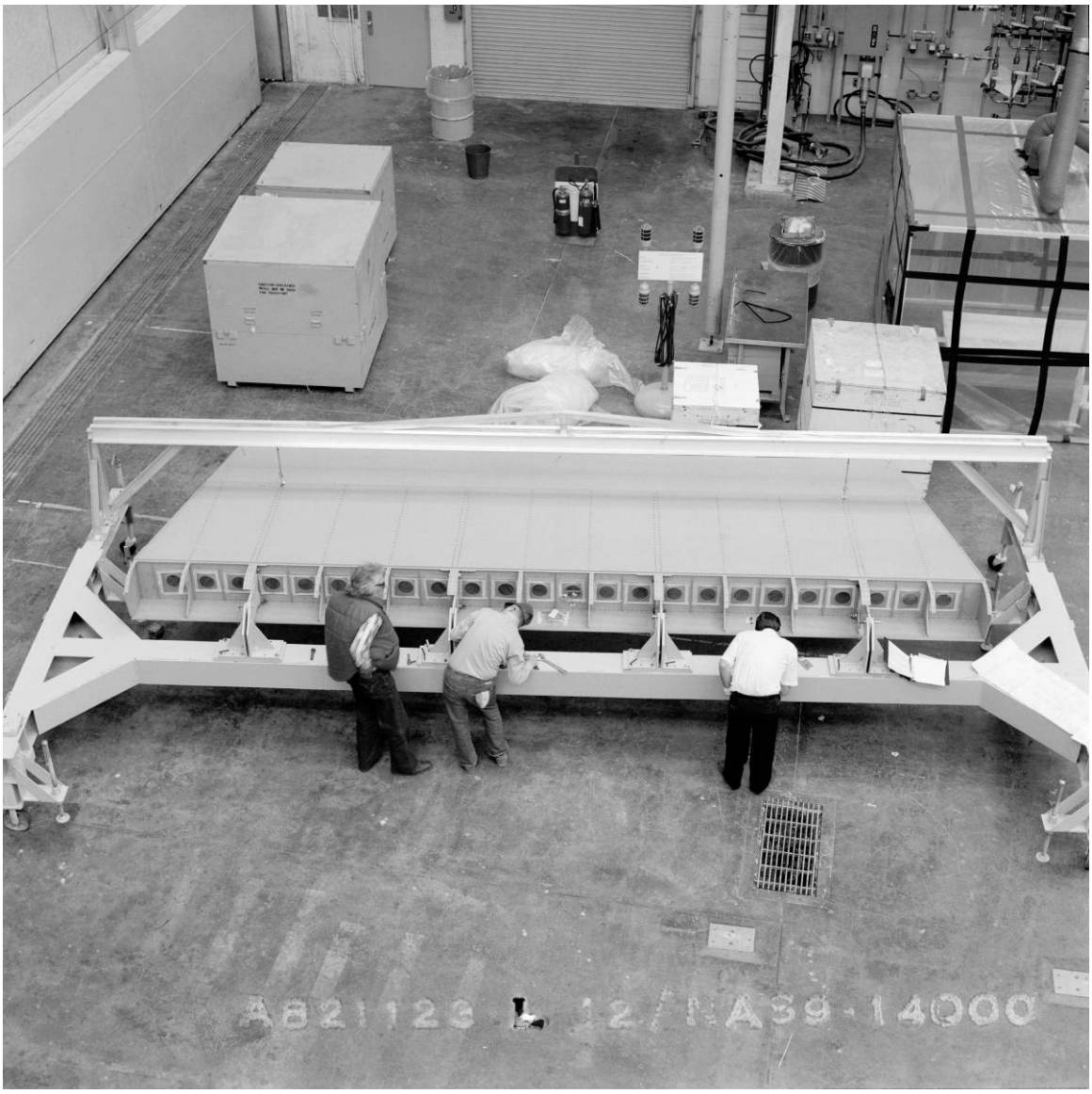

Figure B-32. Assembly work on *Discovery's* body flap, AFP 42, November 23, 1982.
Source: NASA, Johnson Space Center Image Repository, JSC2010-03371.

Figure B-33. Arrival of *Discovery's* crew module at AFP 42, December 28, 1982.
Source: NASA, Johnson Space Center Image Repository, JSC2010-03388.

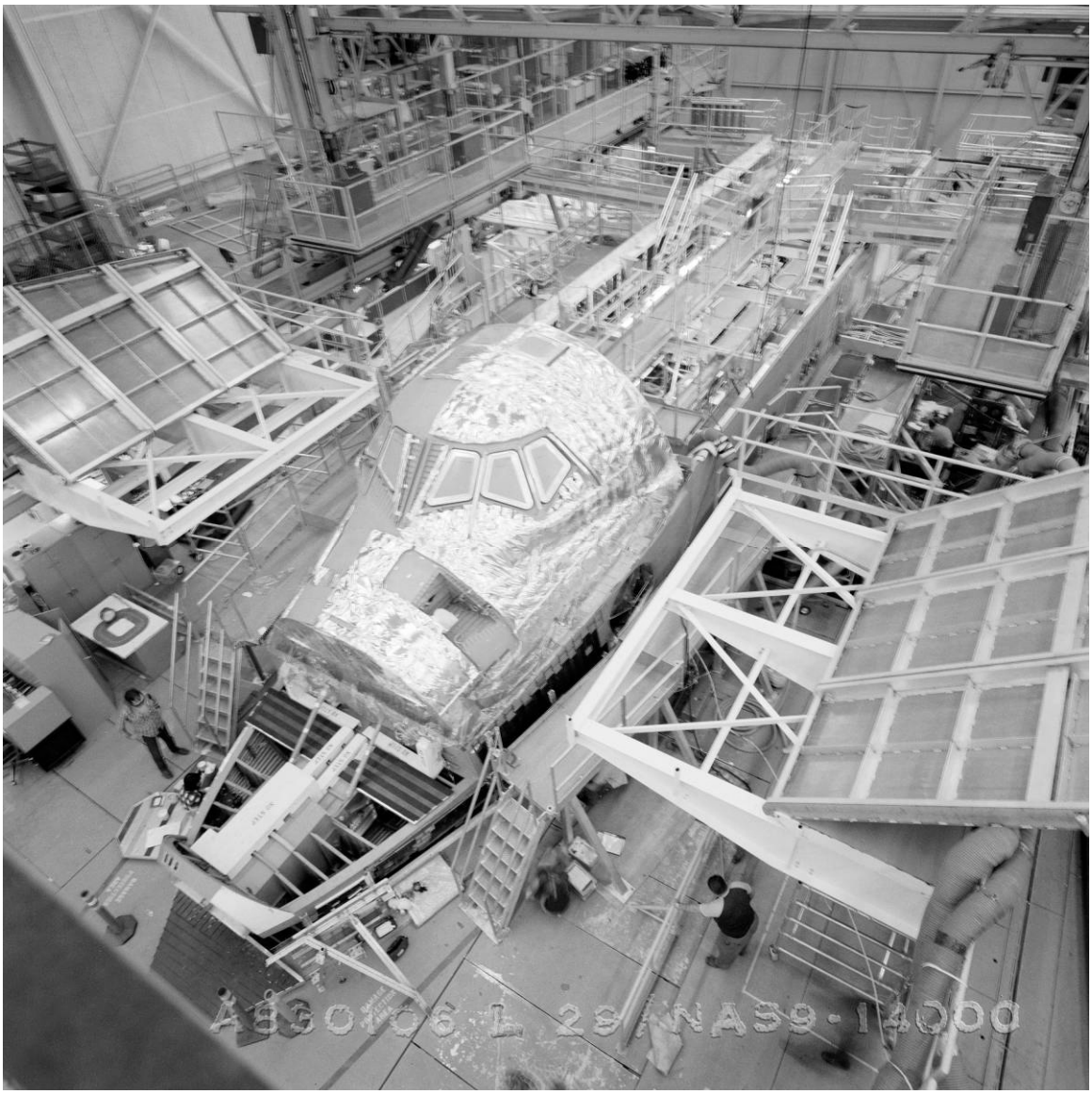

Figure B-34. General view of the progress on *Discovery's* final assembly in High Bay 2, AFP 42, January 6, 1983.
Source: NASA, Johnson Space Center Image Repository, JSC2010-03391.

Figure B-35. Installation of *Discovery's* port side main landing gear in High Bay 2, AFP 42, January 8, 1983.
Source: NASA, Johnson Space Center Image Repository, JSC2010-03396.

Figure B-36. Preparing for the installation of *Discovery's* aft fuselage in High Bay 2, AFP 42, January 11, 1983.
Source: NASA, Johnson Space Center Image Repository, JSC2010-03401.

Figure B-37. Installation of *Discovery's* upper forward fuselage in High Bay 2, AFP 42, January 12, 1983.
Source: NASA, Johnson Space Center Image Repository, JSC2010-03404.

Figure B-38. *Discovery's* two OMS pods upon arrival at AFP 42, January 18, 1983.
Source: NASA, Johnson Space Center Image Repository, JSC2010-03408.

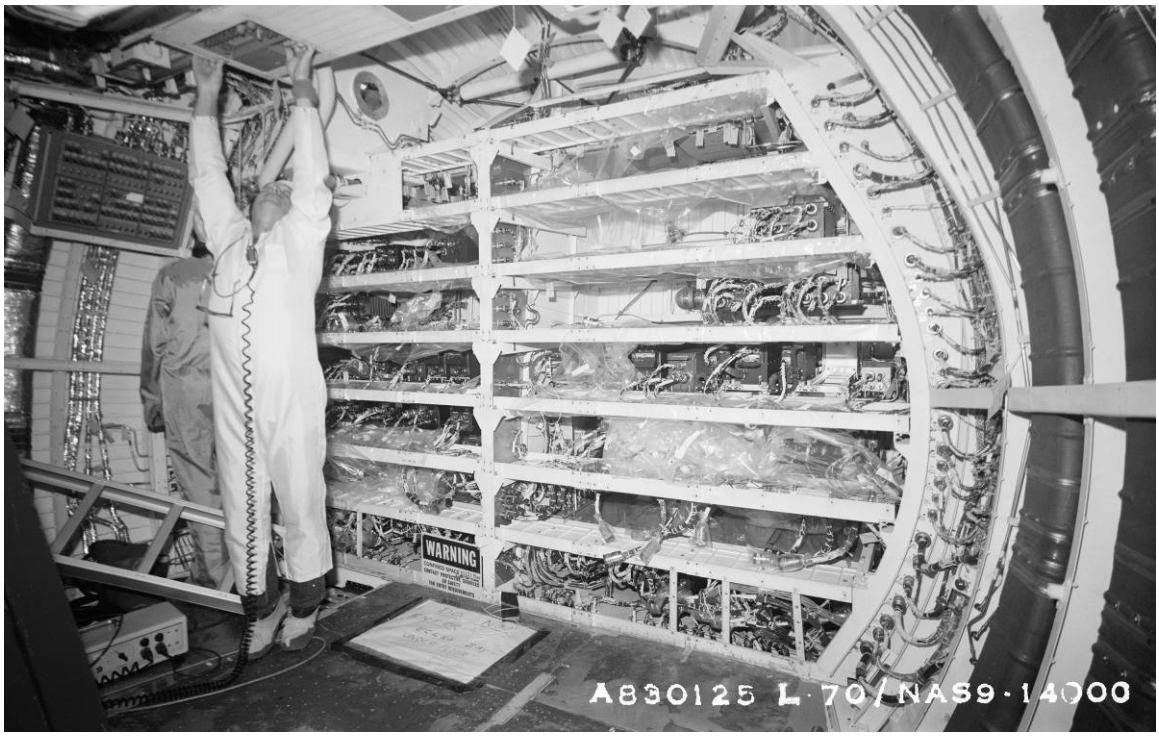

Figure B-39. Manufacturing progress on *Discovery's* middeck in High Bay 2, AFP 42, January 25, 1983.
Source: NASA, Johnson Space Center Image Repository, JSC2010-03590.

Figure B-40. Manufacturing progress on *Discovery's* flight deck in High Bay 2, AFP 42, January 25, 1983.
Source: NASA, Johnson Space Center Image Repository, JSC2010-03589.

Figure B-41. Installation of *Discovery*'s FRCS module in High Bay 2, AFP 42, February 9, 1983.
Source: NASA, Johnson Space Center Image Repository, JSC2010-03410.

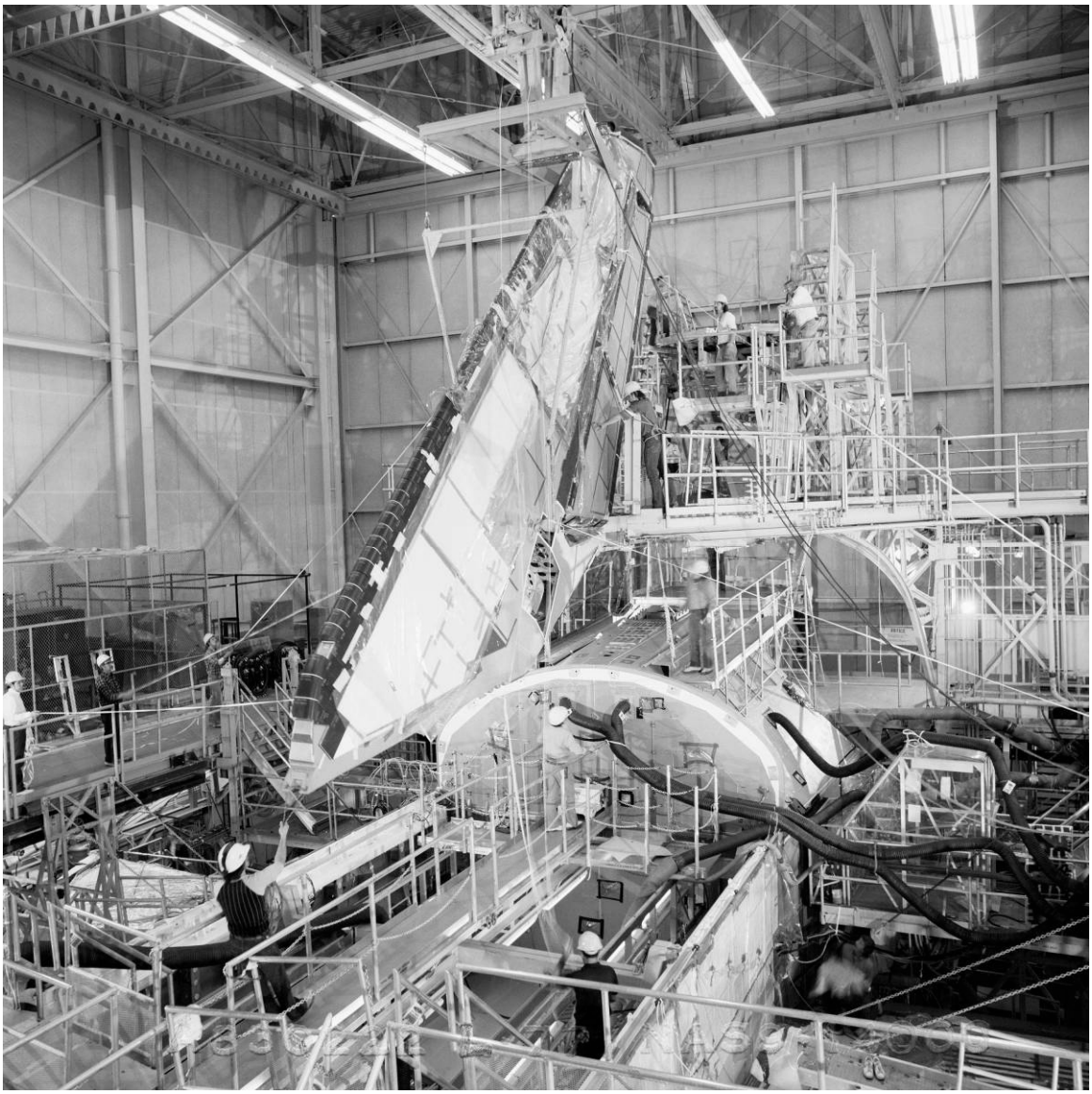

Figure B-42. Installation of *Discovery's* vertical stabilizer in High Bay 2, AFP 42, February 22, 1983.
Source: NASA, Johnson Space Center Image Repository, JSC2010-03417.

Figure B-43. Installation of *Discovery's* nose cone in High Bay 2, AFP 42, March 8, 1983. Source: NASA, Johnson Space Center Image Repository, JSC2010-03441.

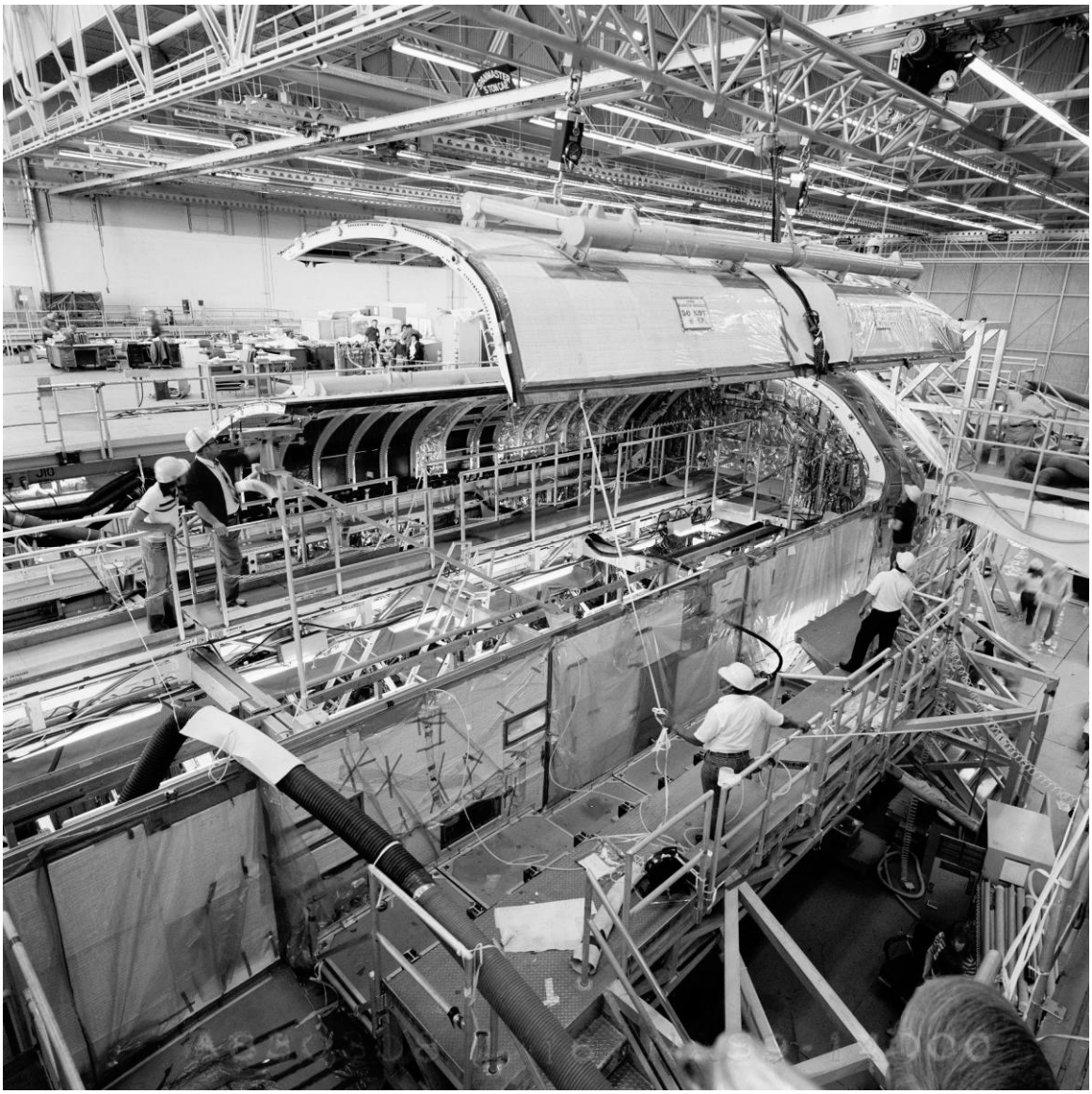

Figure B-44. Installation of the forward half of *Discovery's* starboard payload bay door in High Bay 2, AFP 42, March 8, 1983.
Source: NASA, Johnson Space Center Image Repository, JSC2010-03426.

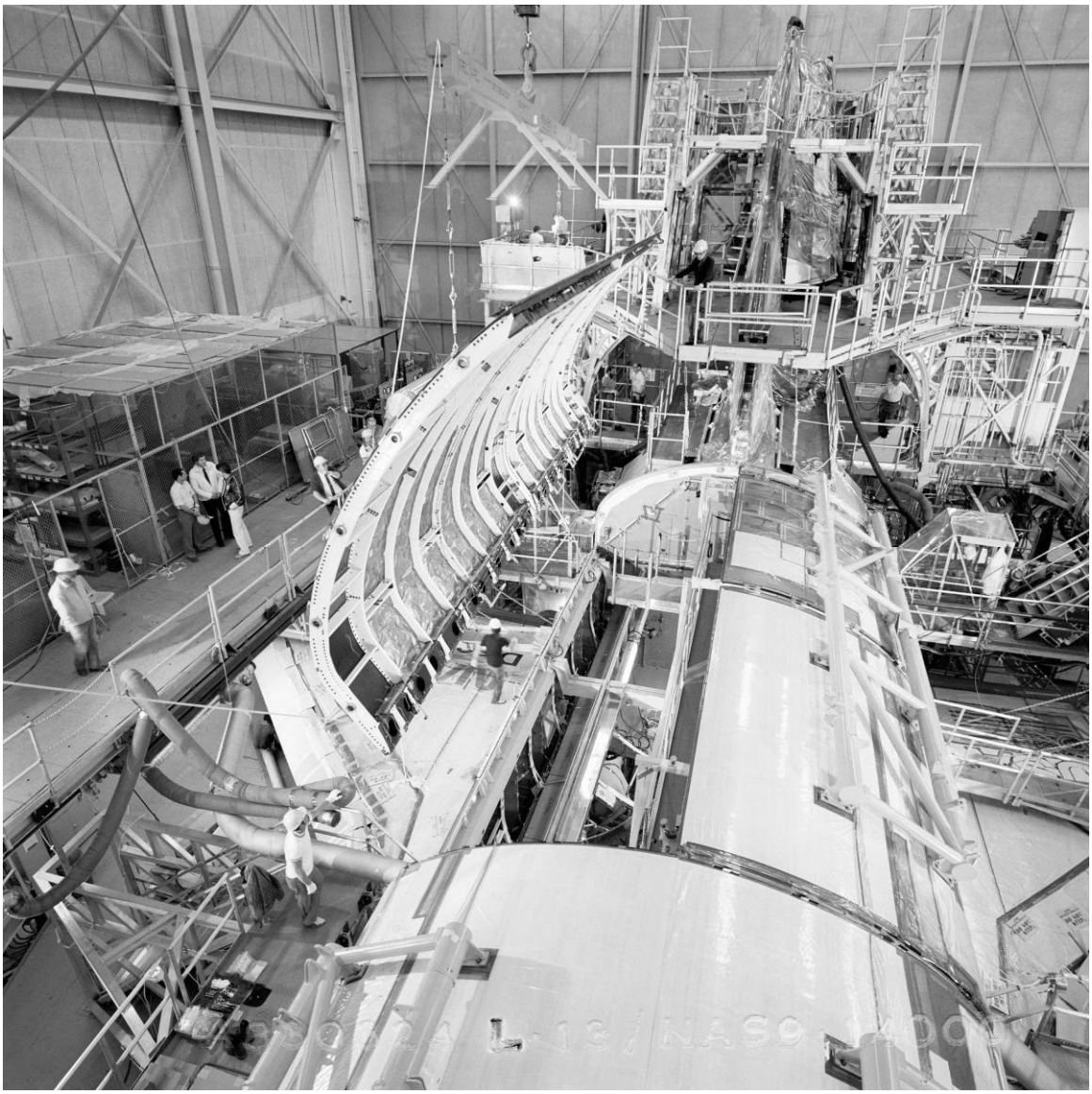

Figure B-45. Installation of the rear half of *Discovery's* starboard payload bay door in High Bay 2, AFP 42, March 8, 1983.
Source: NASA, Johnson Space Center Image Repository, JSC2010-03427.

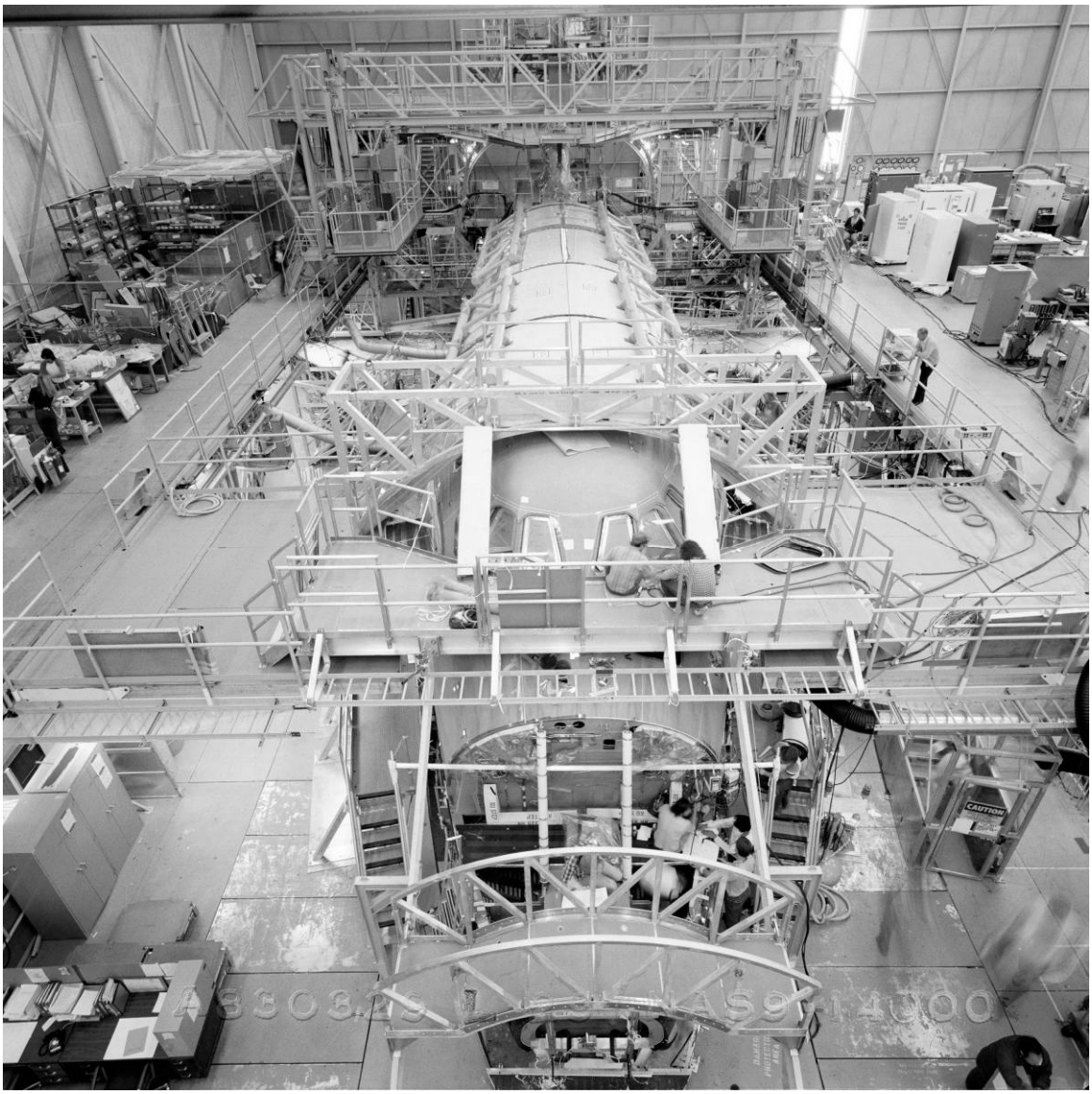

Figure B-46. General view of the progress on *Discovery's* final assembly in High Bay 2, AFP 42, March 29, 1983.
Source: NASA, Johnson Space Center Image Repository, JSC2010-03431.

Figure B-47. Manufacturing operations on *Discovery's* flight deck in High Bay 2, AFP 42, April 19, 1983.
Source: NASA, Johnson Space Center Image Repository, JSC2010-03469.

Figure B-48. Painting of *Discovery's* midfuselage in High Bay 2, AFP 42, April 26, 1983. Source: NASA, Johnson Space Center Image Repository, JSC2010-03443.

Figure B-49. Installation of AFRSI on *Discovery's* FRCS module in High Bay 2, AFP 42, April 27, 1983.
Source: NASA, Johnson Space Center Image Repository, JSC2010-03445.

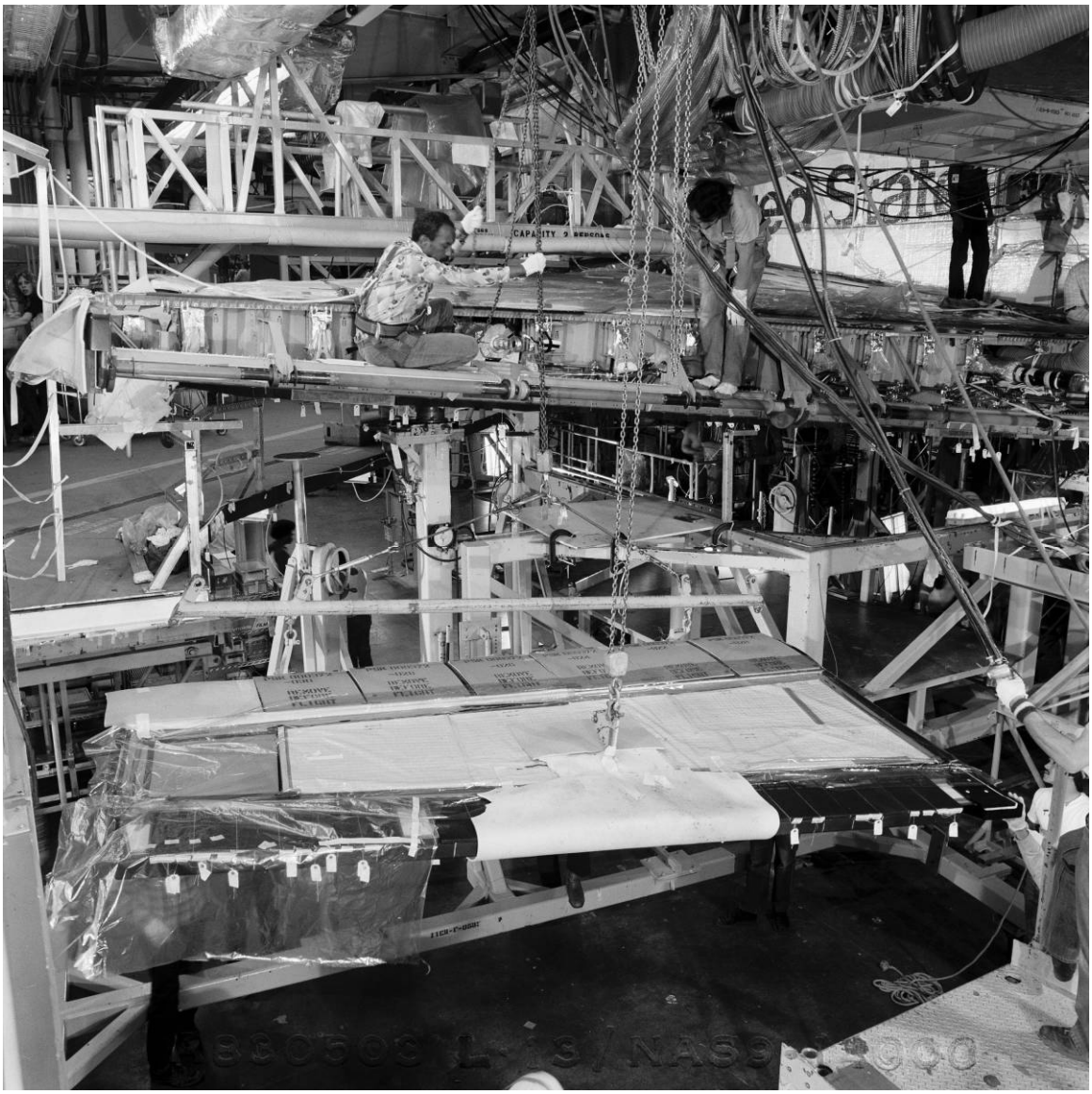

Figure B-50. Installation of outboard elevon to *Discovery's* port wing in High Bay 2, AFP 42, May 3, 1983.
Source: NASA, Johnson Space Center Image Repository, JSC2010-03446.

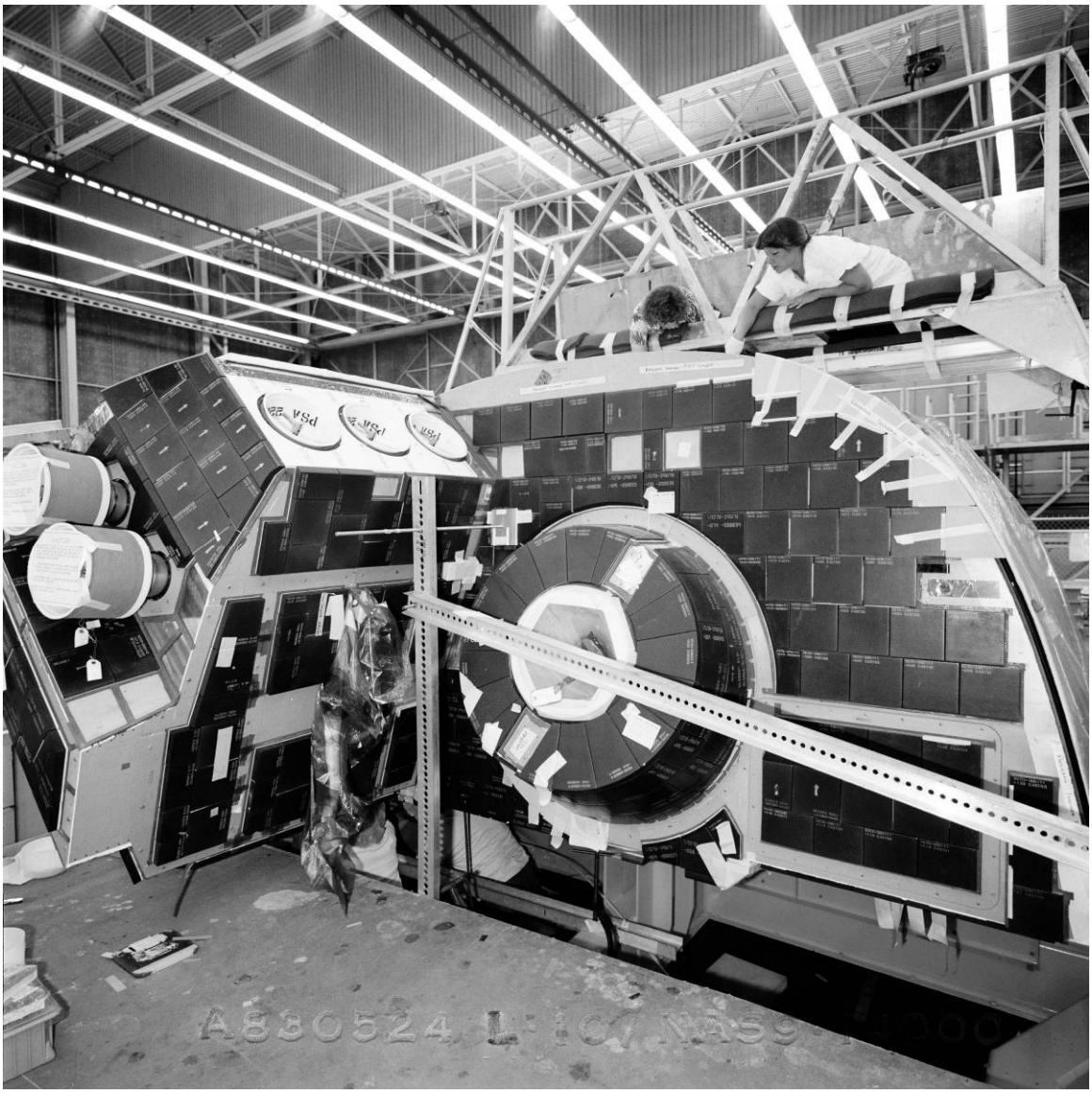

Figure B-51. Installation of HRSI on *Discovery's* port OMS pod, AFP 42, May 24, 1983.
Source: NASA, Johnson Space Center Image Repository, JSC2010-03454.

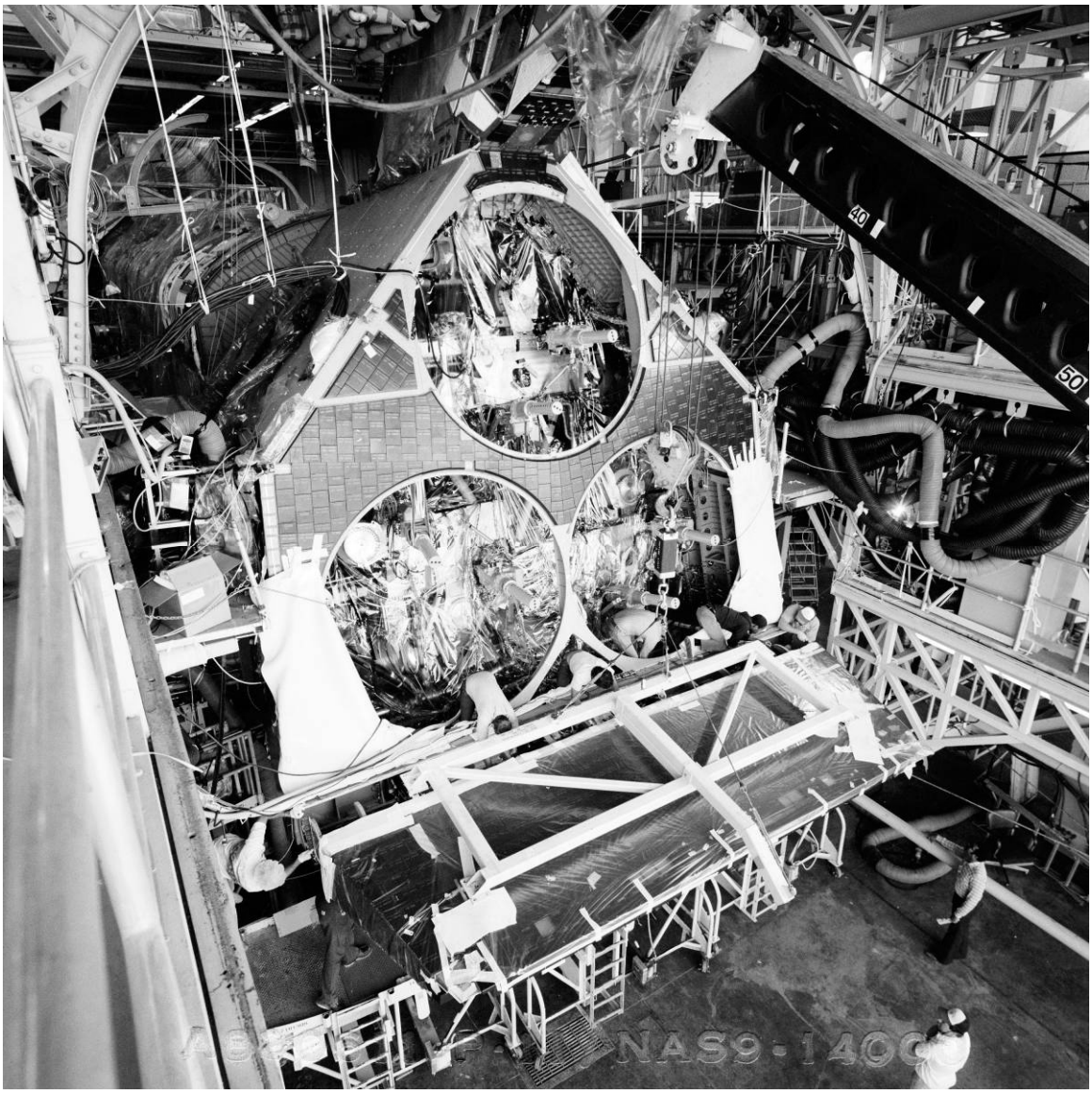

Figure B-52. Installation of body flap to *Discovery's* aft fuselage in High Bay 2, AFP 42, June 11, 1983.
Source: NASA, Johnson Space Center Image Repository, JSC2010-03463.

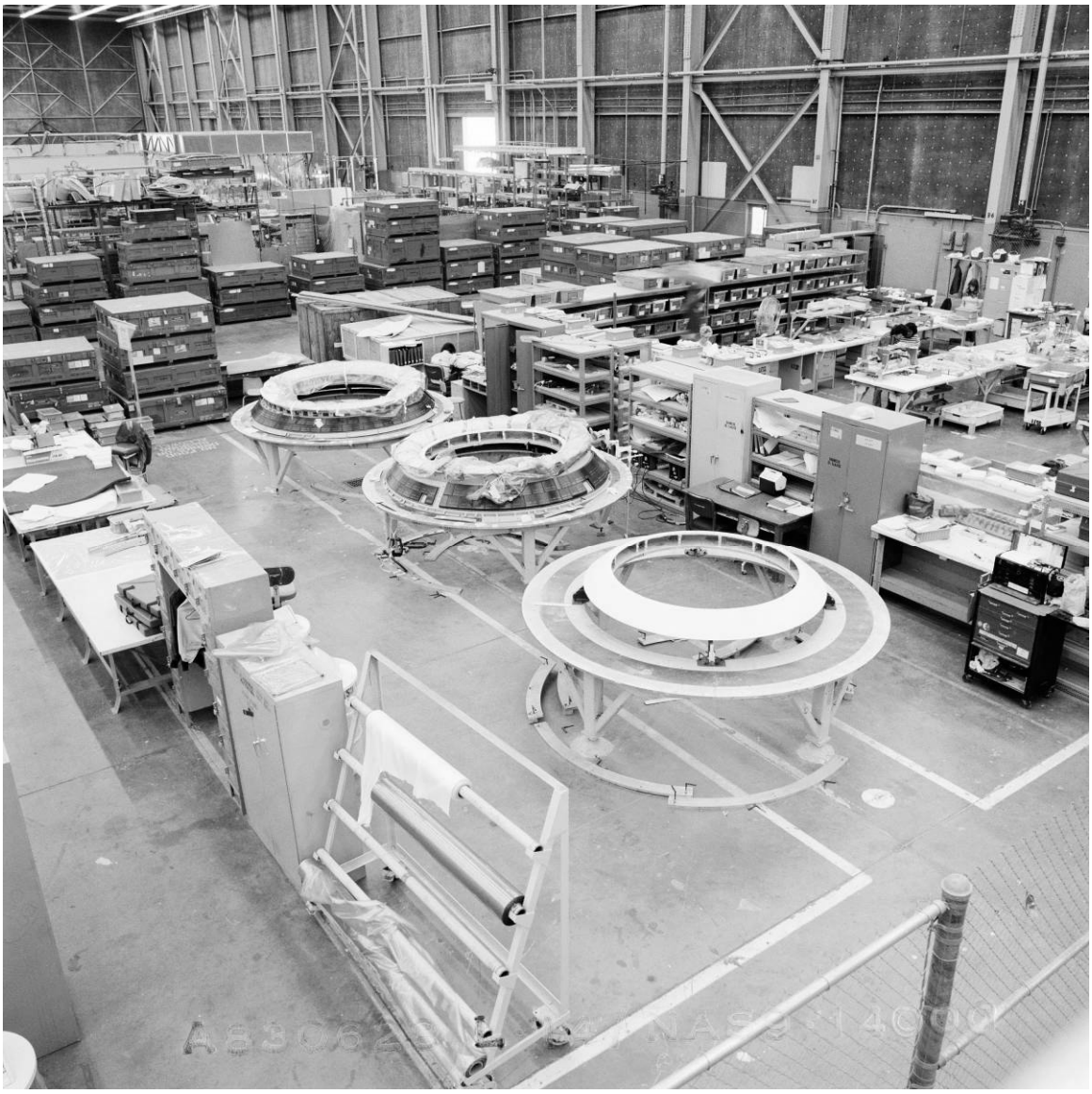

Figure B-53. *Discovery's* three SSME dome heat shields at AFP 42, June 28, 1983.
Source: NASA, Johnson Space Center Image Repository, JSC2010-03473.

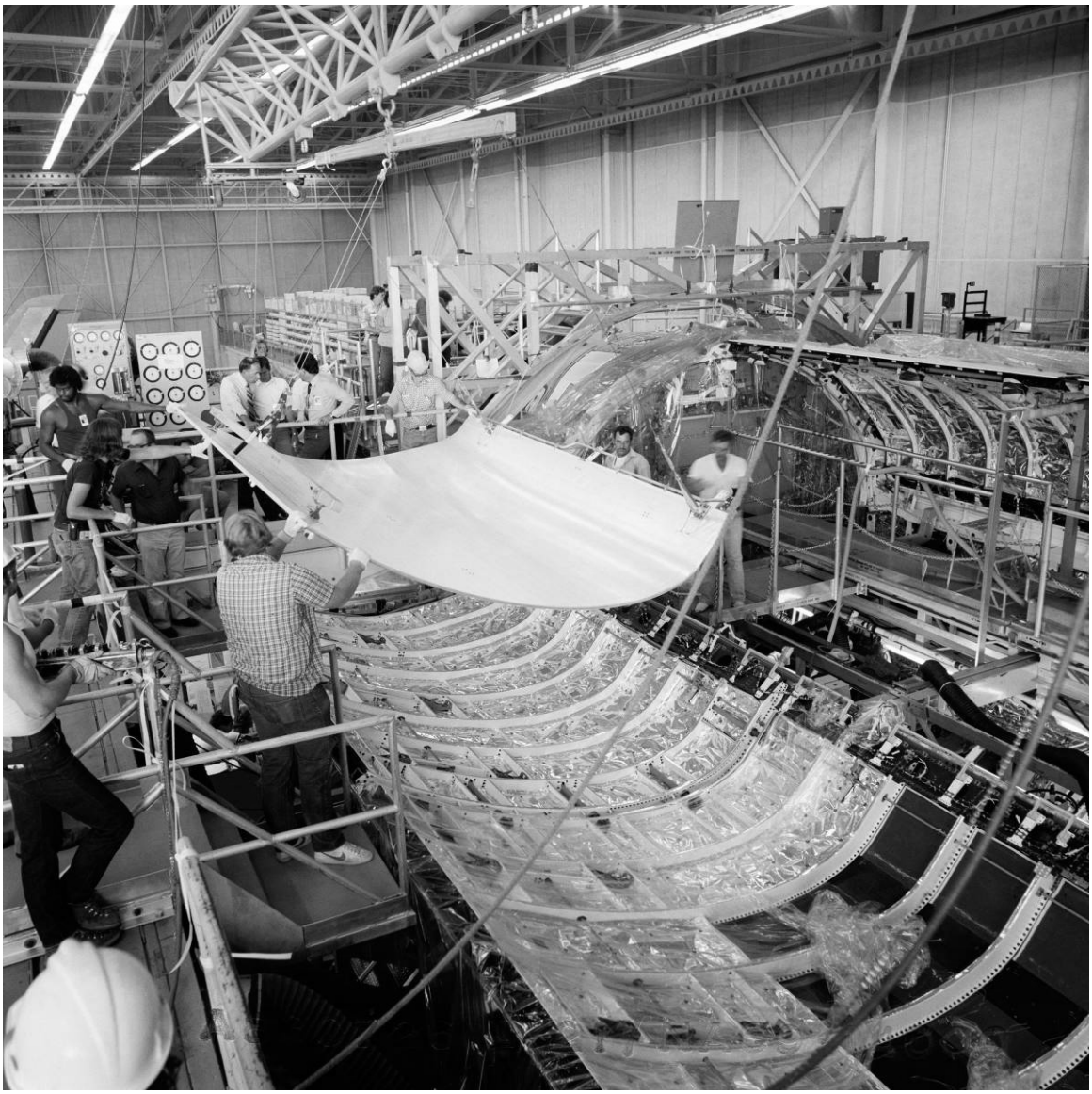

Figure B-54. Installation of the forward radiator panel on *Discovery's* port payload bay door in High Bay 2, AFP 42, July 26, 1983.
Source: NASA, Johnson Space Center Image Repository, JSC2010-03484.

Figure B-55. Installation of HRSI on one of *Discovery's* SSME dome heat shields at AFP 42, August 9, 1983.
Source: NASA, Johnson Space Center Image Repository, JSC2010-03490.

Figure B-56. Technicians working on *Discovery's* flight deck in High Bay 2, AFP 42, September 16, 1983.
Source: NASA, Johnson Space Center Image Repository, JSC2010-03594.

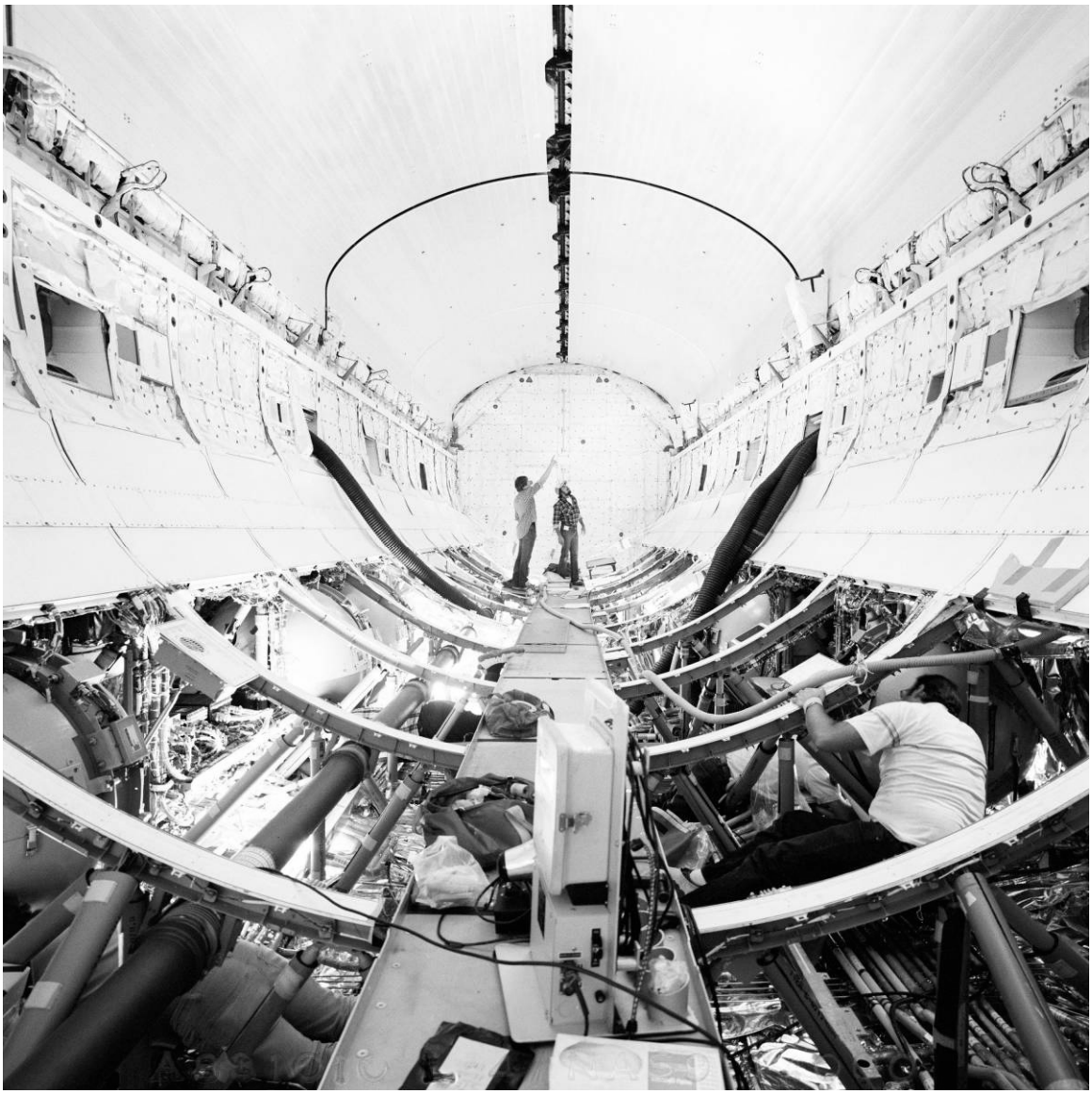

Figure B-57. Assembly work in *Discovery's* midfuselage in High Bay 2, AFP 42, October 10, 1983.
Source: NASA, Johnson Space Center Image Repository, JSC2010-03522.

Figure B-58. Installation of tail cone onto *Discovery* for transport to DFRC, High Bay 2, AFP 42, October 10, 1983.
Source: NASA, Johnson Space Center/Boeing, Huntington Beach, California, A831010L-10C.

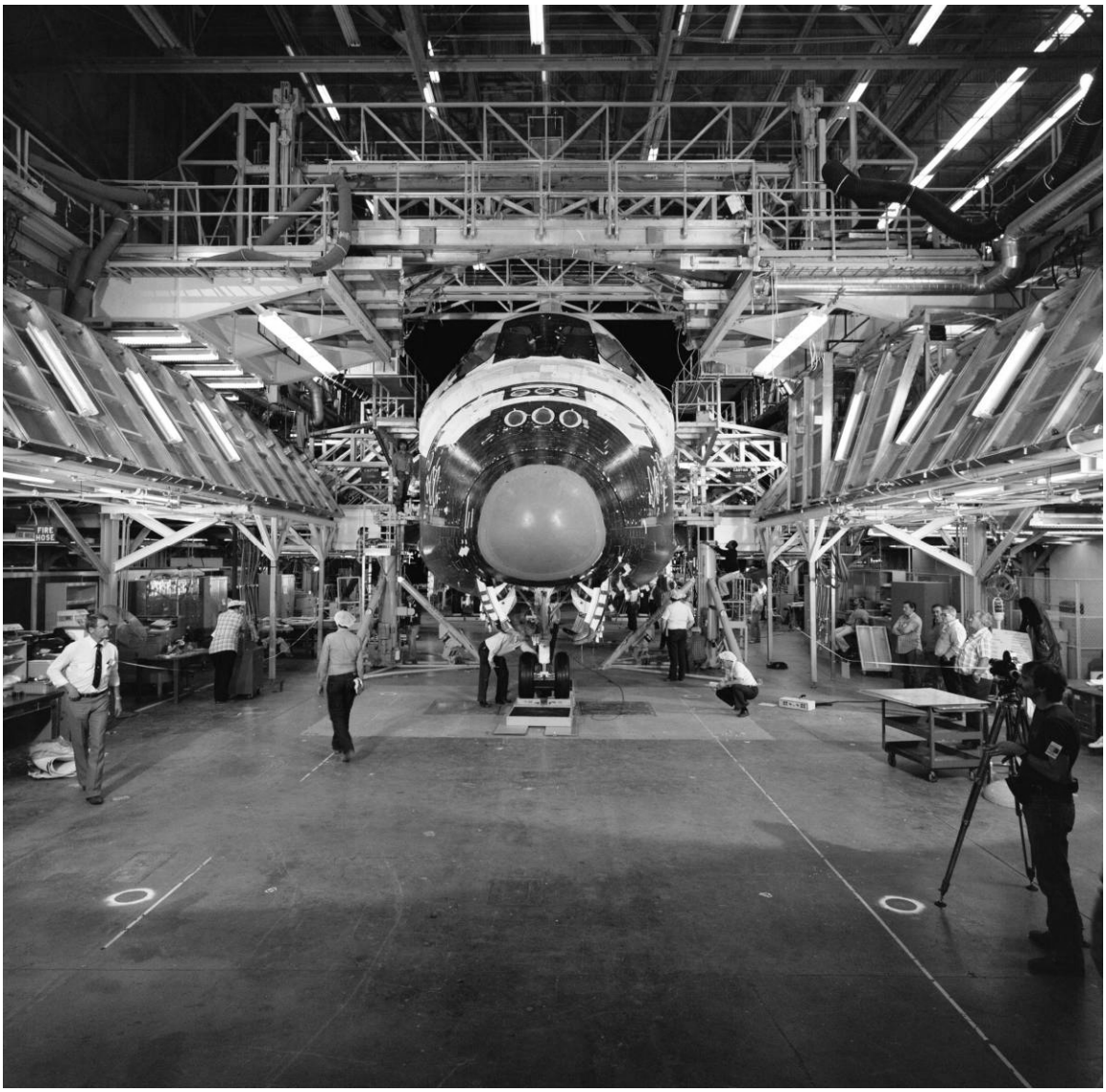

Figure B-59. Rollout of *Discovery* from High Bay 2, AFP 42, for transport to DFRC, October 11, 1983.
Source: NASA, Johnson Space Center/Boeing, Huntington Beach, California, A831012H-32C.

Figure B-60. *Discovery* ready to be positioned in the Mate-Demate Device at DFRC for attachment to the SCA for delivery to KSC, November 5, 1983.
Source: NASA, Johnson Space Center Image Repository, JSC2010-00016.

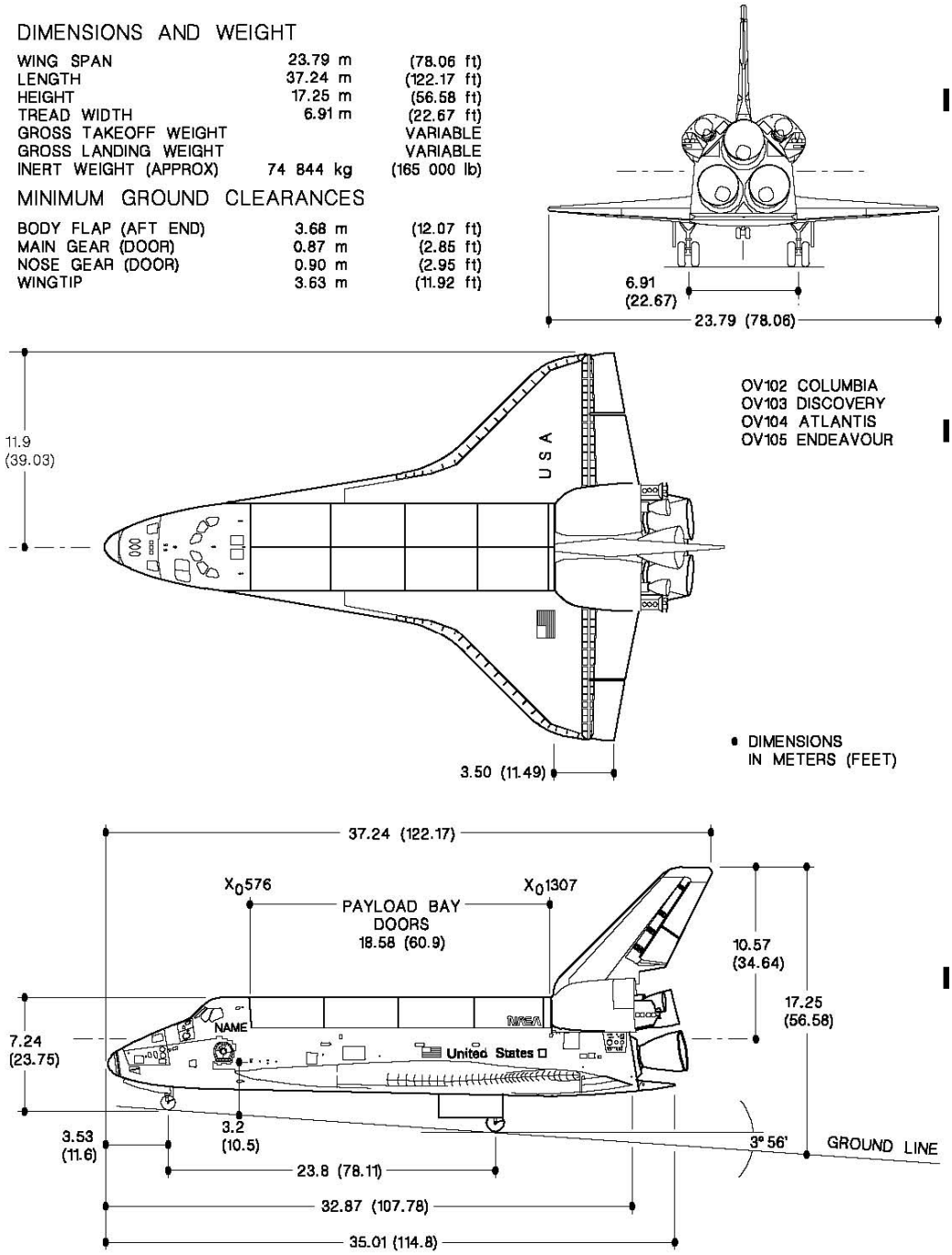

Figure B-61. General dimensions of the orbiter vehicle.
Source: NASA, *Shuttle Operational Data Book*, Volume 4, Figure 1-1.

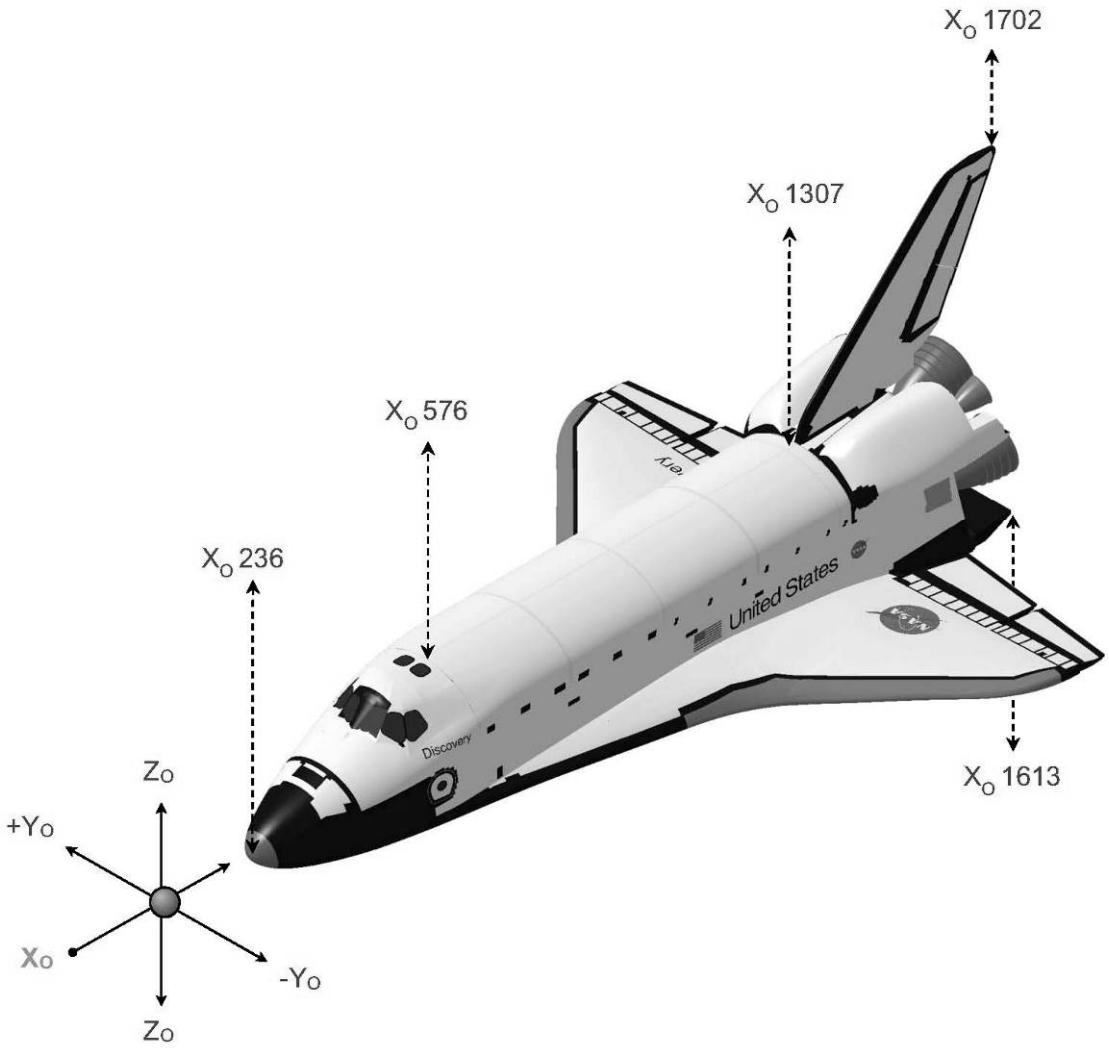

Figure B-62. Orbiter vehicle coordinate system.
Source: Boeing, *Orbiter Vehicle Data Pack Document: Orbiter Vehicle Discovery (OV-103), Volume I*, 71.

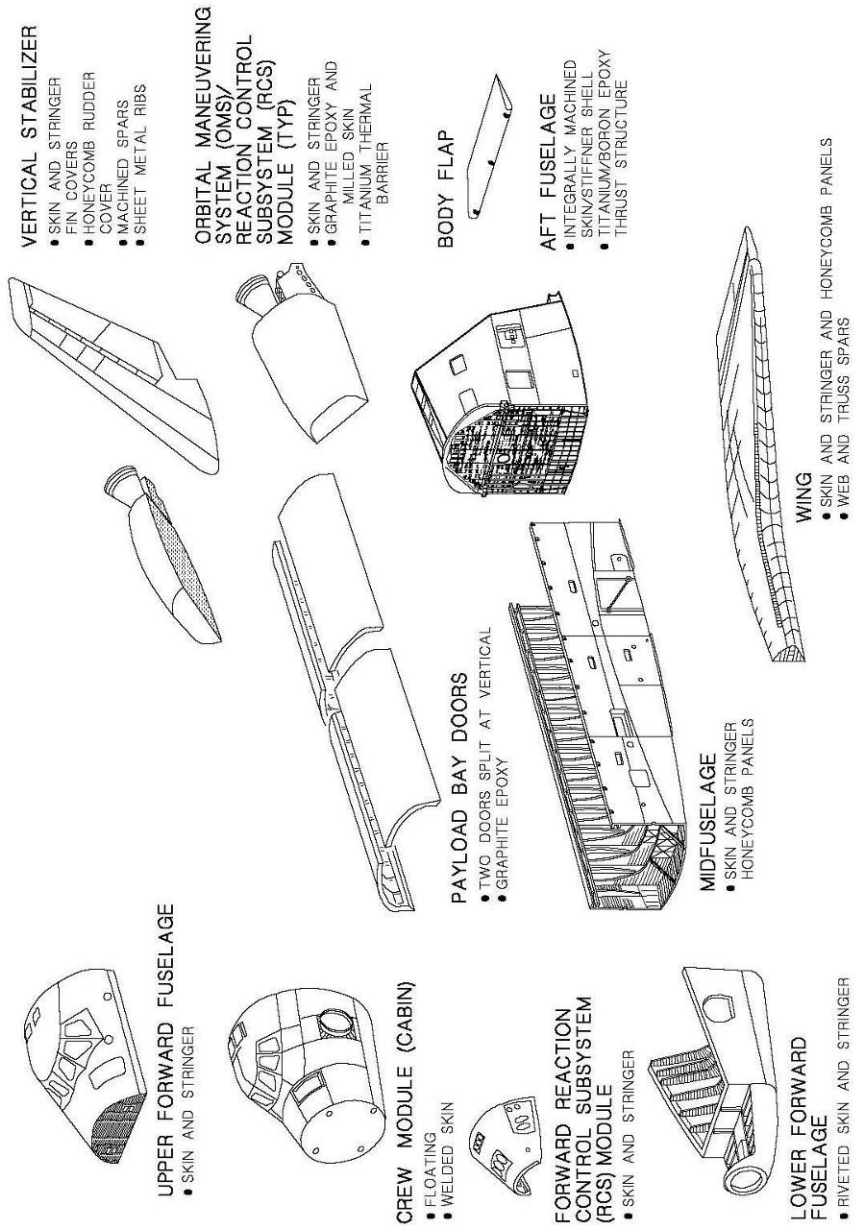

Figure B-63. Major components of the orbiter vehicle.
Source: NASA, *Shuttle Operational Data Book*, Volume 4, Figure 1-3.

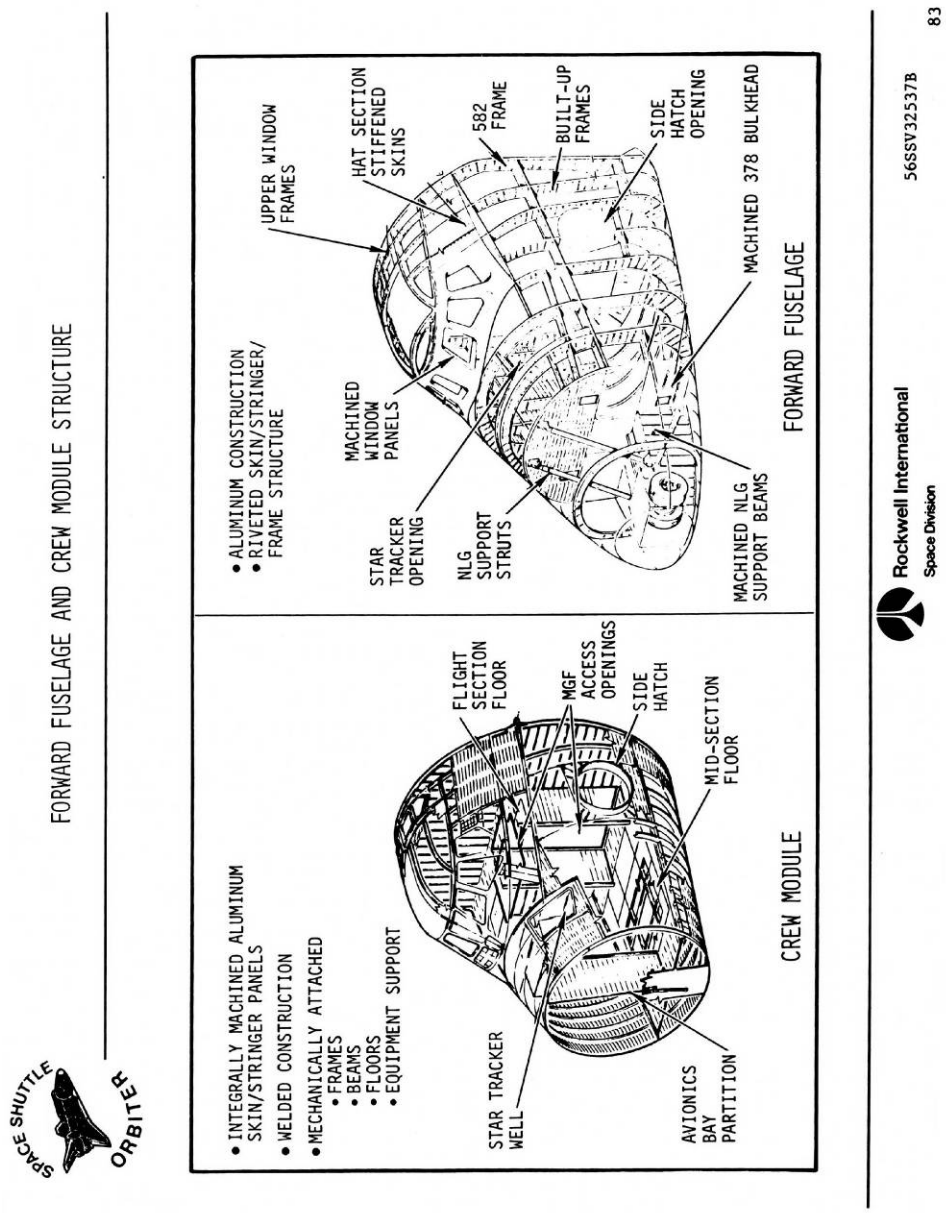

Figure B-64. Diagram of orbiter crew module and forward fuselage.
Source: NASA Johnson Space Center, Image Repository, S78-23424.

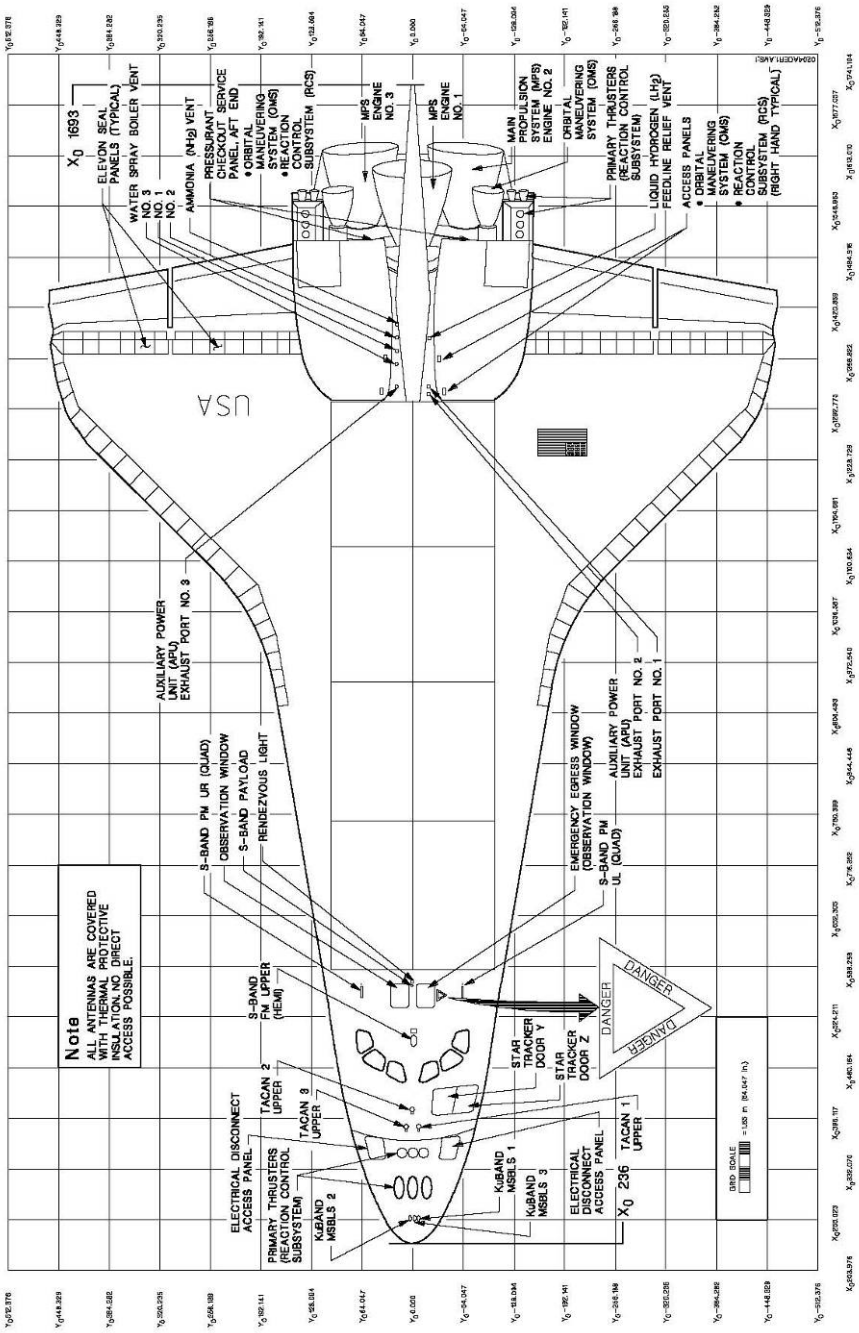

Figure B-65. Diagram of the top view of the orbiter vehicle.
Source: NASA, *Shuttle Operational Data Book*, Volume 4, part 1, Figure 2-4a.

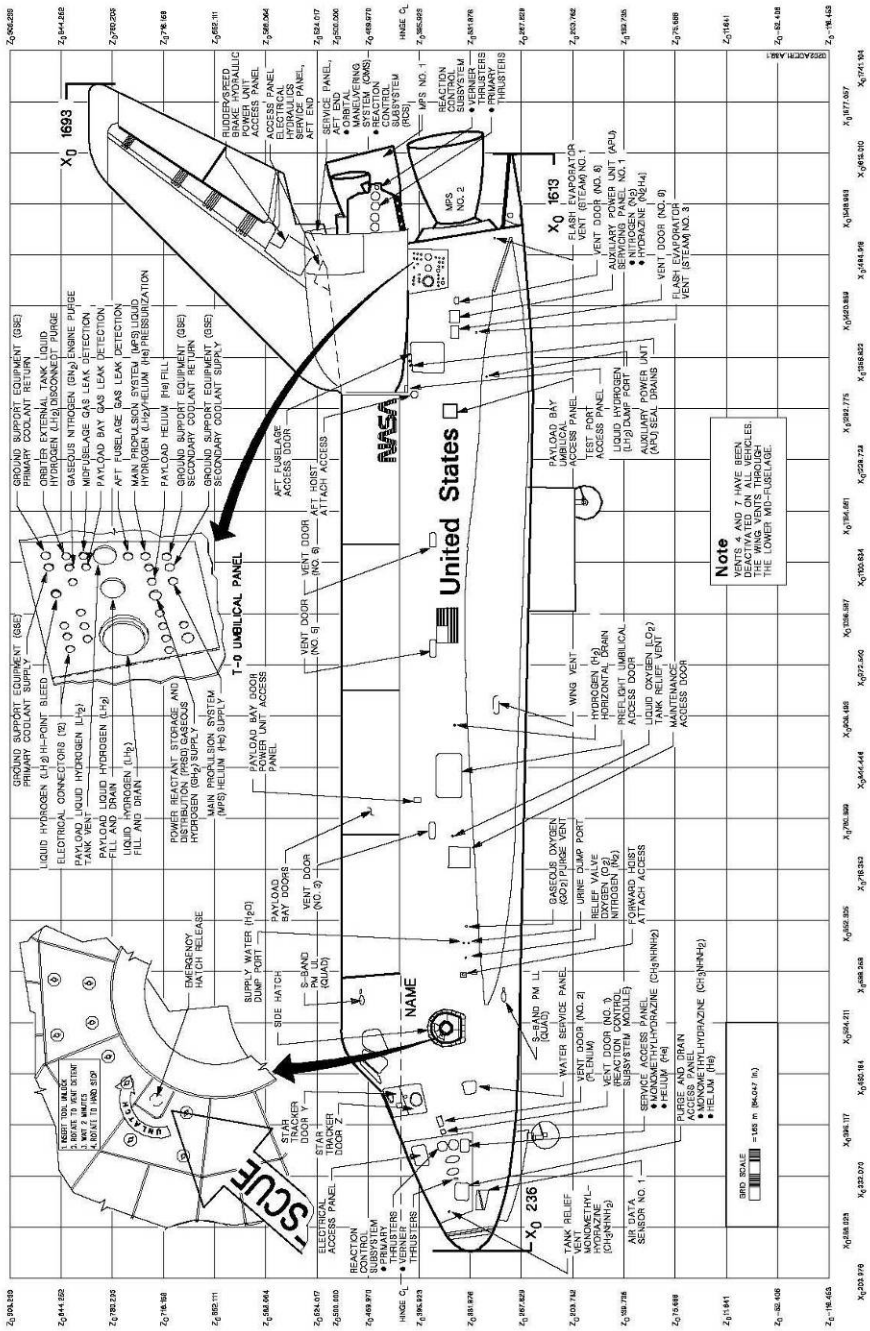

Figure B-66. Diagram of the port view of the orbiter vehicle.
Source: NASA, *Shuttle Operational Data Book*, Volume 4, pare 1, Figure 2-2a.

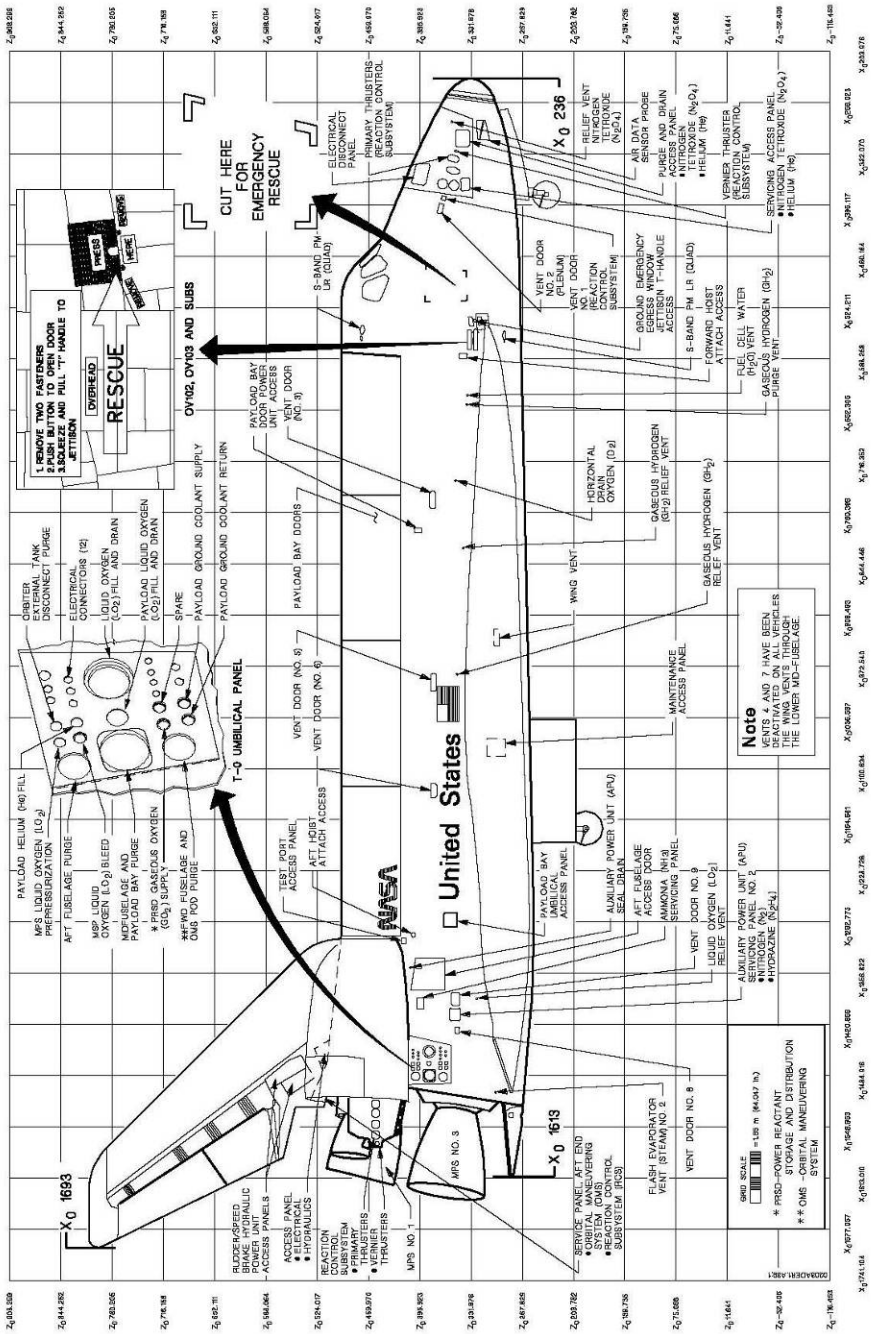

Figure B-67. Diagram of the starboard view of the orbiter vehicle.
Source: NASA, *Shuttle Operational Data Book*, Volume 4, part 1, Figure 2-3a.

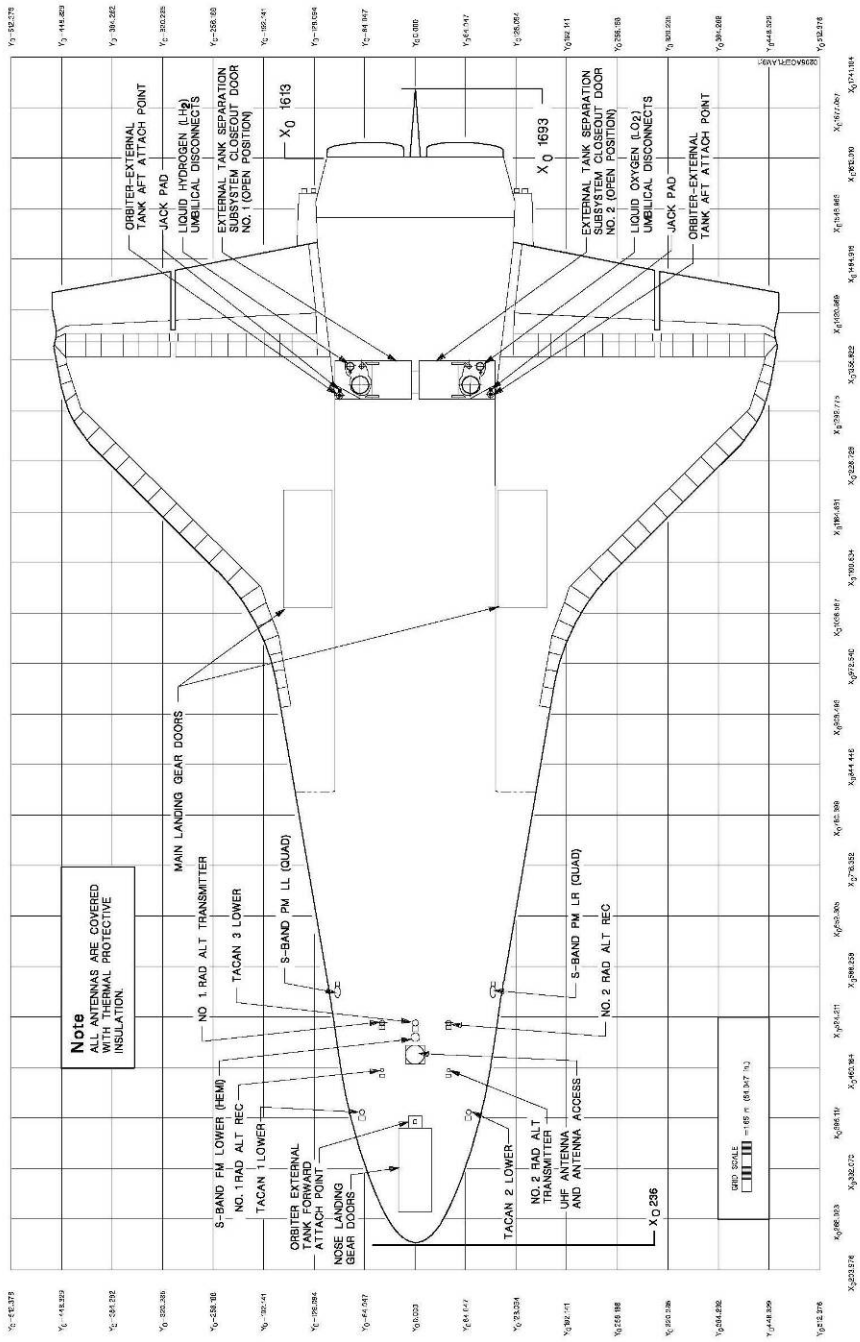

Figure B-68. Diagram of the bottom view of the orbiter vehicle.
Source: NASA, *Shuttle Operational Data Book*, Volume 4, part 1, Figure 2-5a.

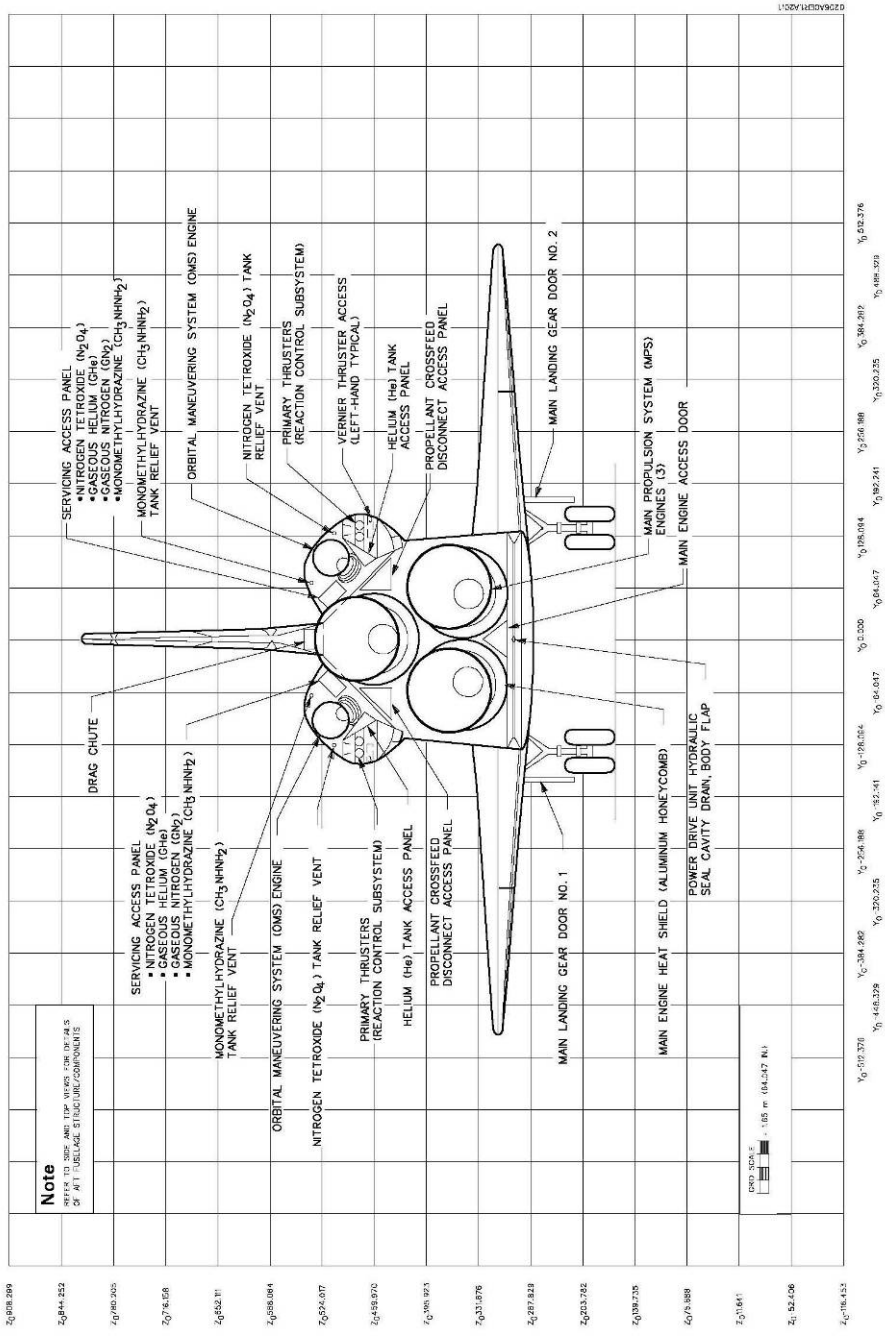

Figure B-69. Diagram of the aft view of the orbiter vehicle.
Source: NASA, *Shuttle Operational Data Book*, Volume 4, part 1, Figure 2-6a.

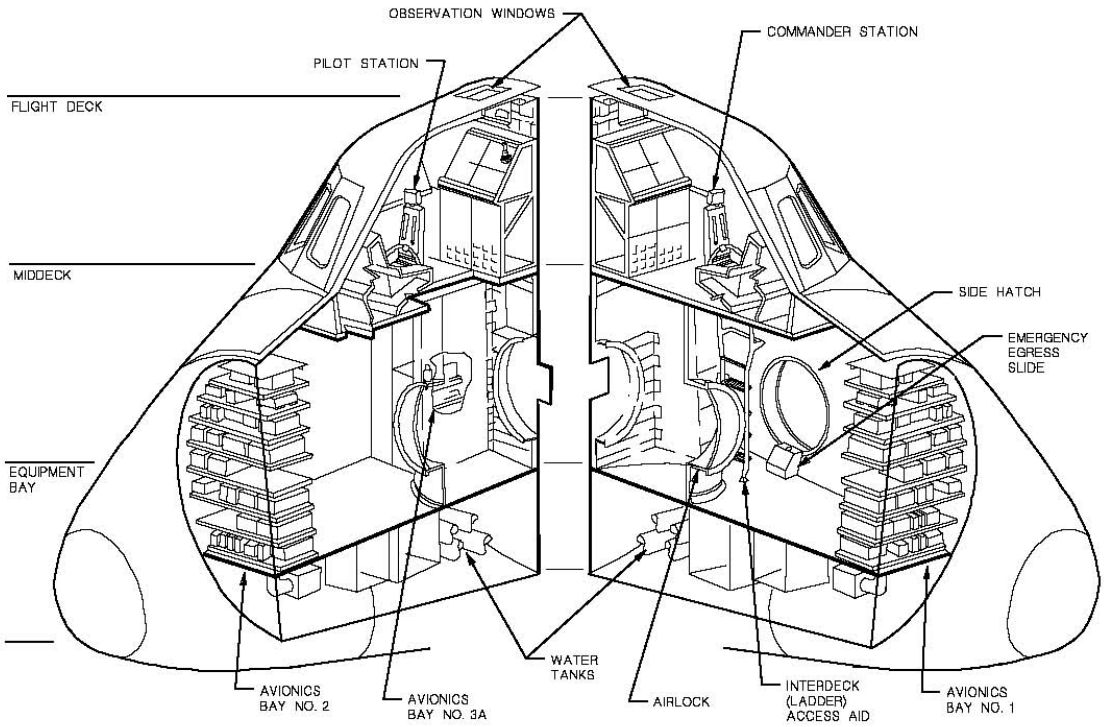

Figure B-70. Diagram of the orbiter crew cabin.
Source: NASA, *Shuttle Operational Data Book*, Volume 4, part 1, Figure 3-1.

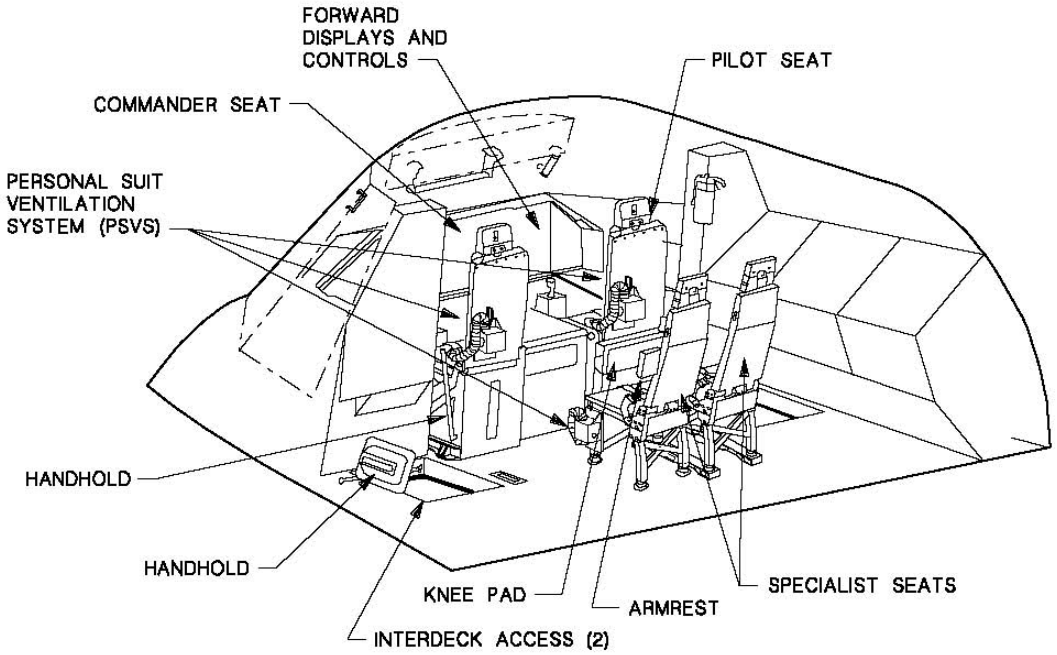

Figure B-71. Diagram of the forward flight deck.
Source: NASA, *Shuttle Operational Data Book*, Volume 4, part 1, Figure 3-2.

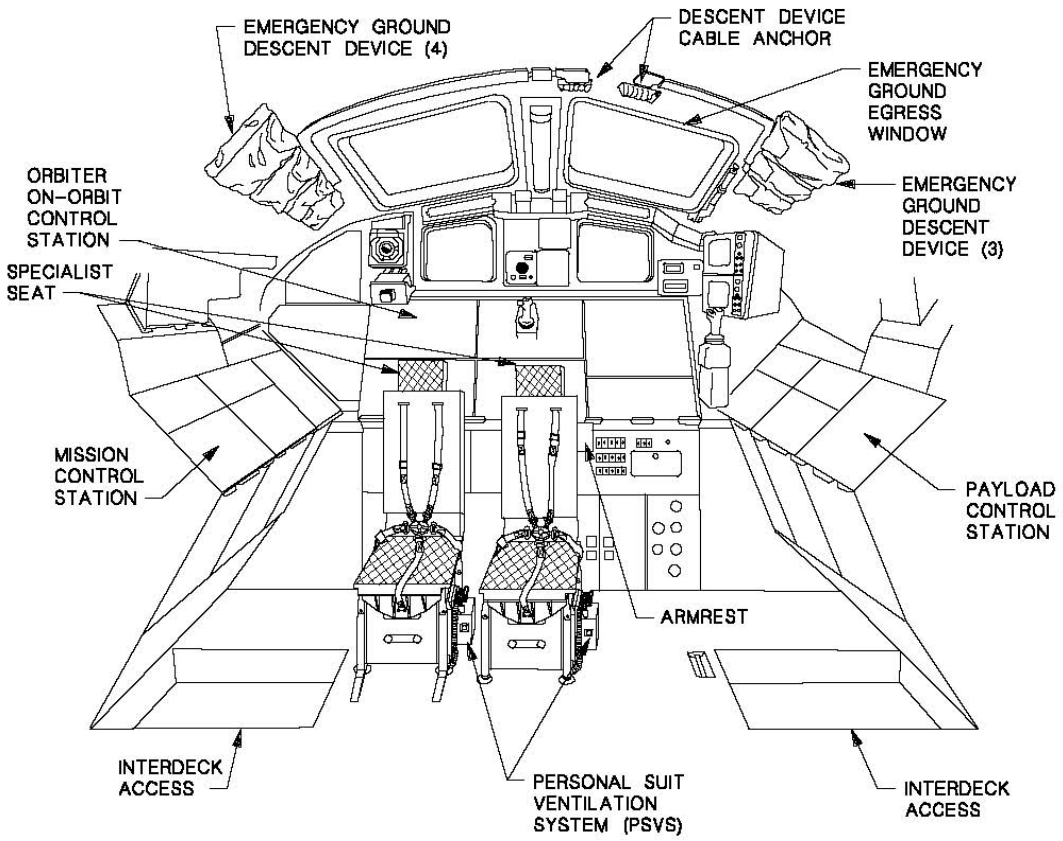

Figure B-72. Diagram of the aft flight deck.
Source: NASA, *Shuttle Operational Data Book*, Volume 4, part 1, Figure 3-3a.

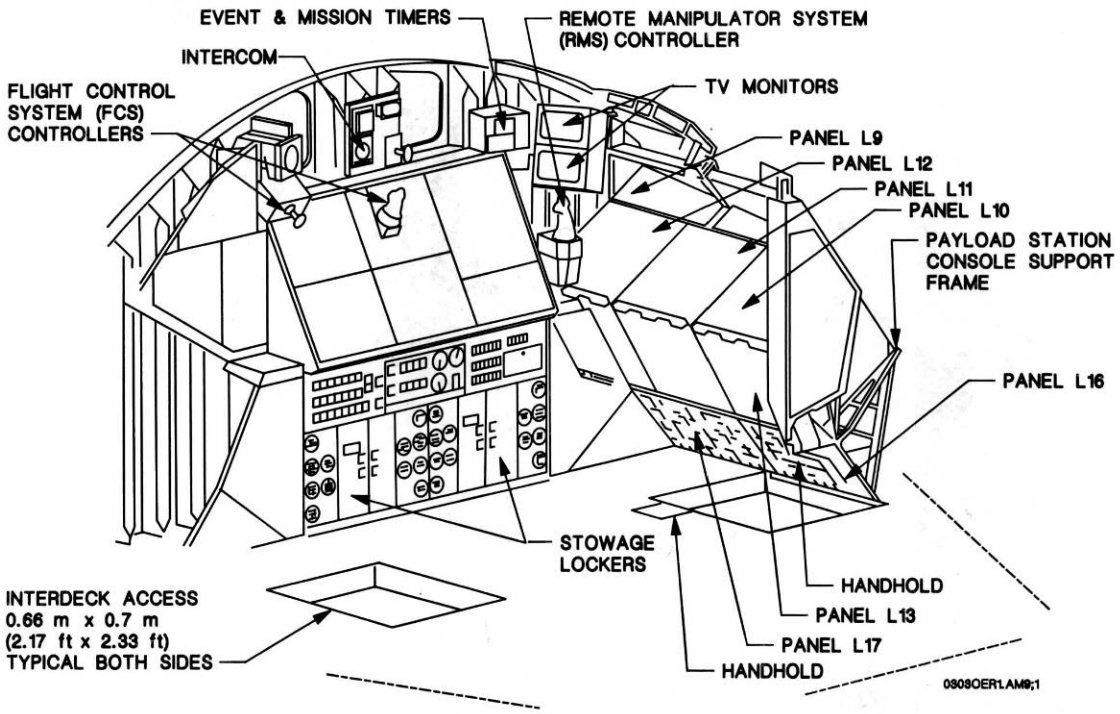

Figure B-73. Diagram of the port side of the aft flight deck.
Source: NASA, *Shuttle Operational Data Book*, Volume 4, part 1, Figure 3-3c.

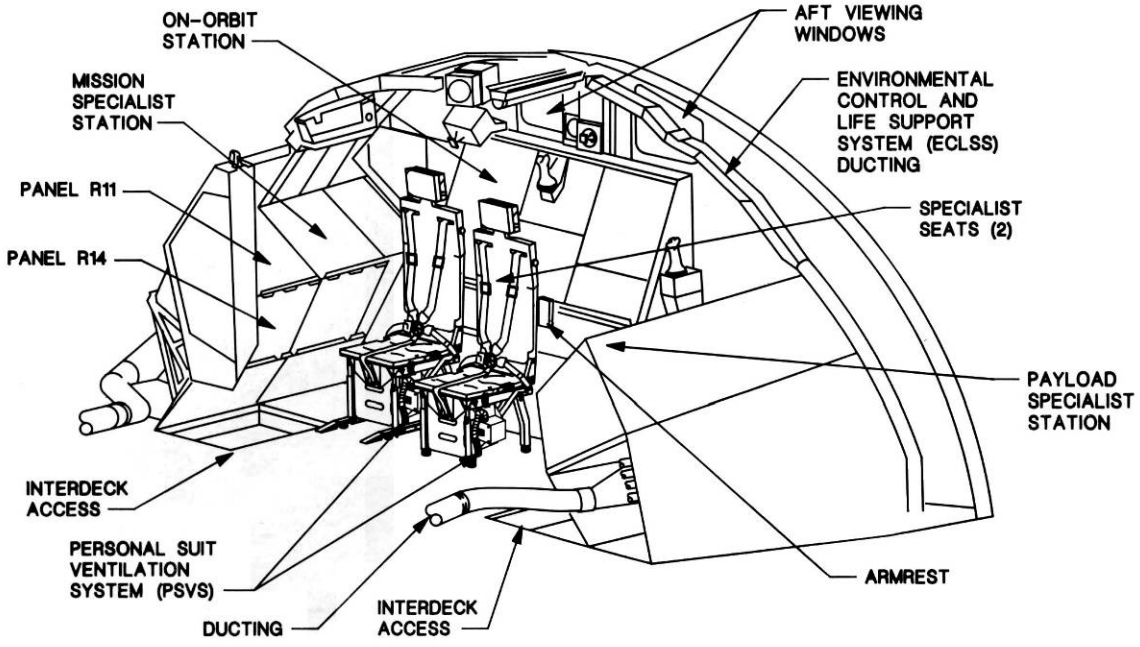

Figure B-74. Diagram of the starboard side of the aft flight deck.
Source: NASA, *Shuttle Operational Data Book*, Volume 4, part 1, Figure 3-3b.

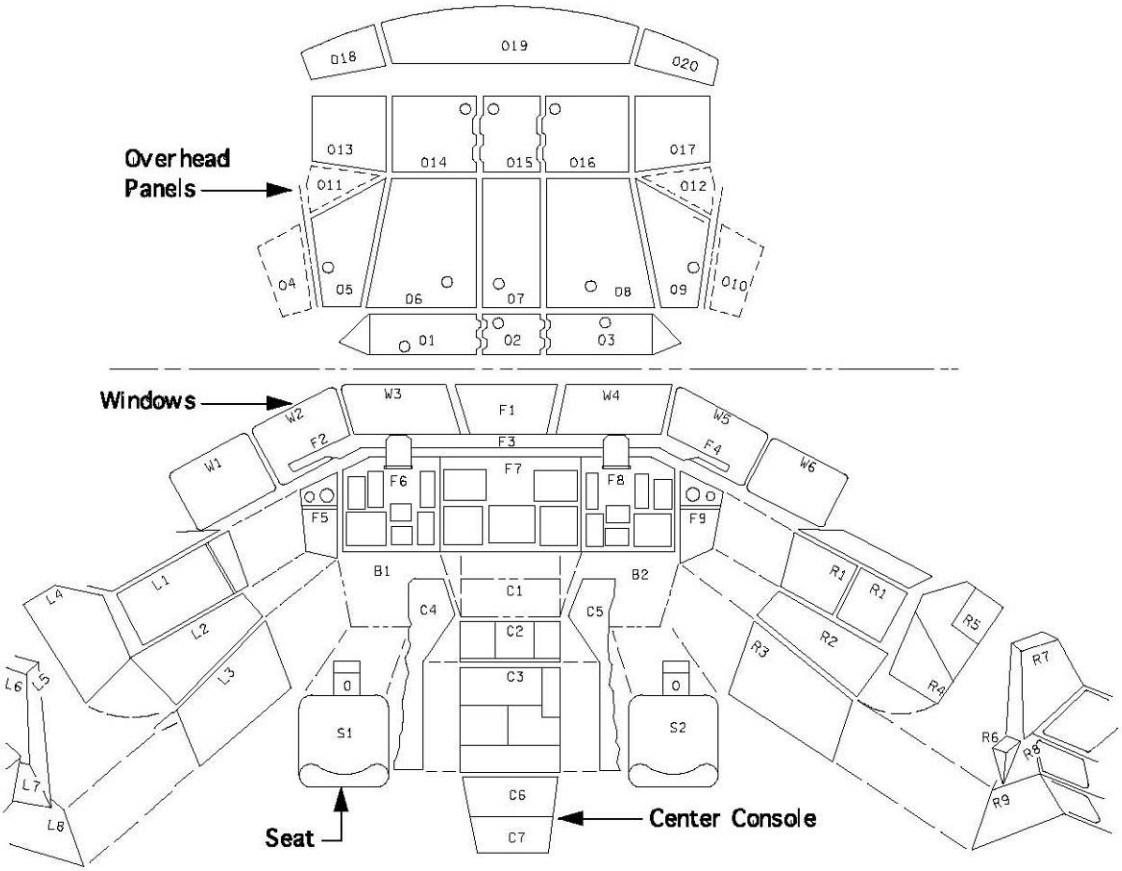

Figure B-75. Diagram of the forward flight deck control panels.
Source: USA, *Shuttle Crew Operation Manual*, 1.1-9.

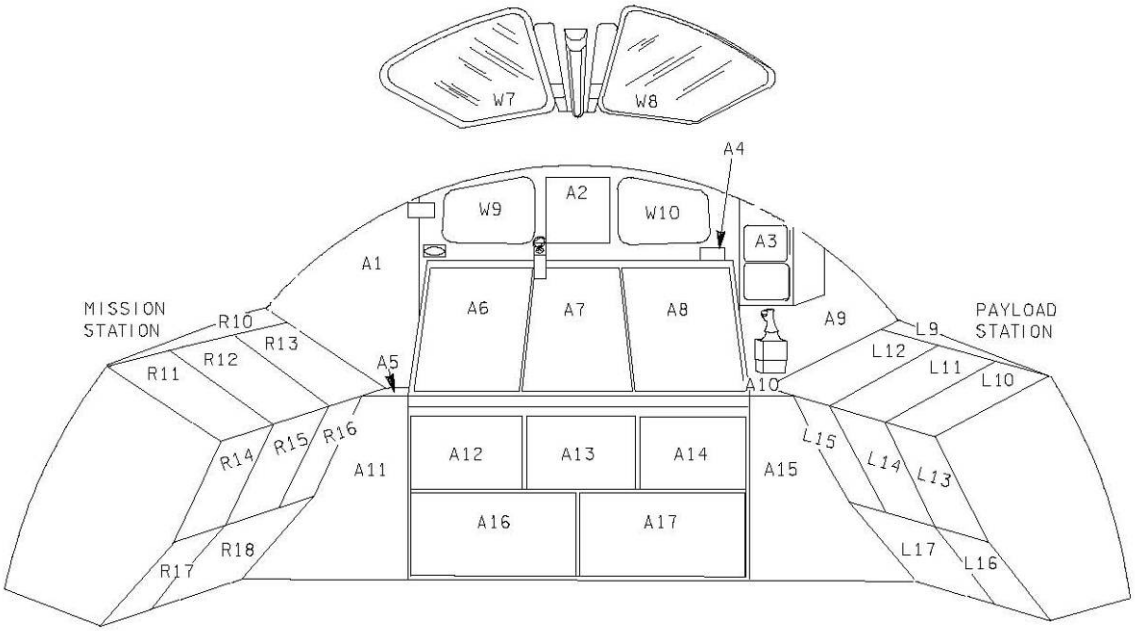

Figure B-76. Diagram of the aft flight deck control panels.
Source: USA, *Shuttle Crew Operation Manual*, 1.1-10.

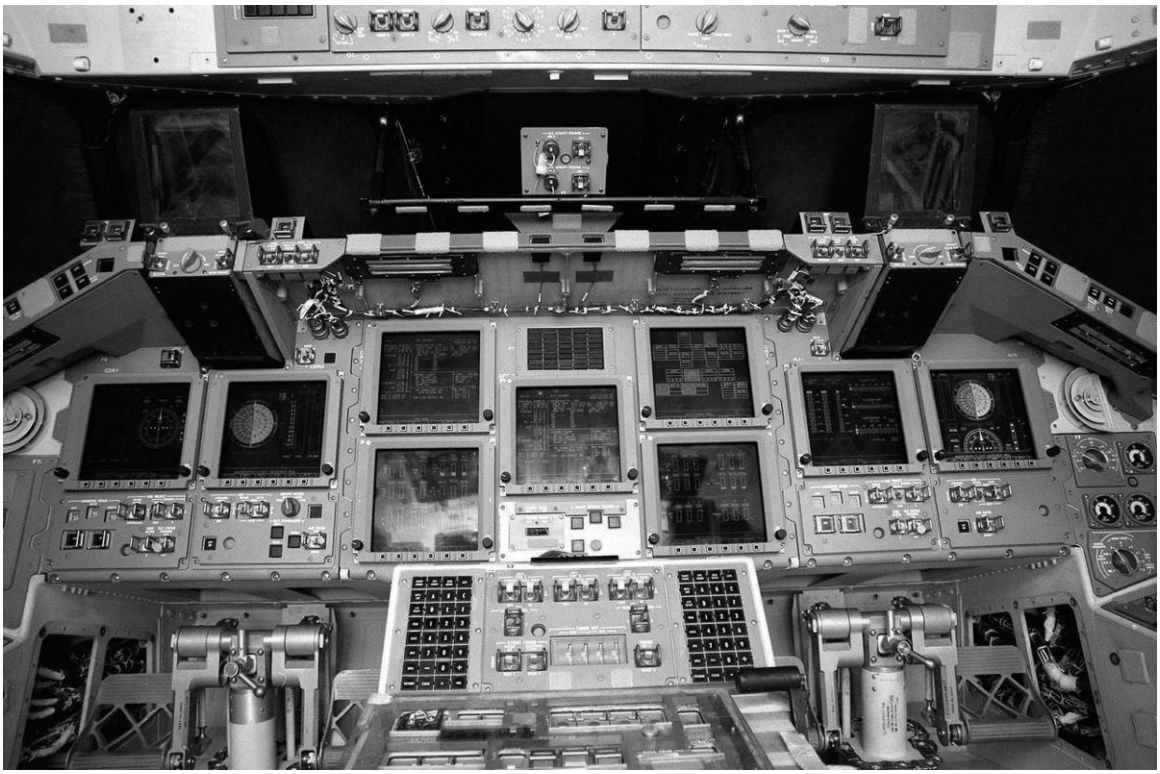

Figure B-77. Photograph of the MEDS after installation on Atlantis, March 1, 2000. Source: NASA, Langley Research Center, EL-2000-00037, accessed at http://nix.ksc.NASA.gov/.

Figure B-78. Photograph of the original orbiter flight deck, 1978.
Source: NASA Johnson Space Center, Image Repository, S78-23470.

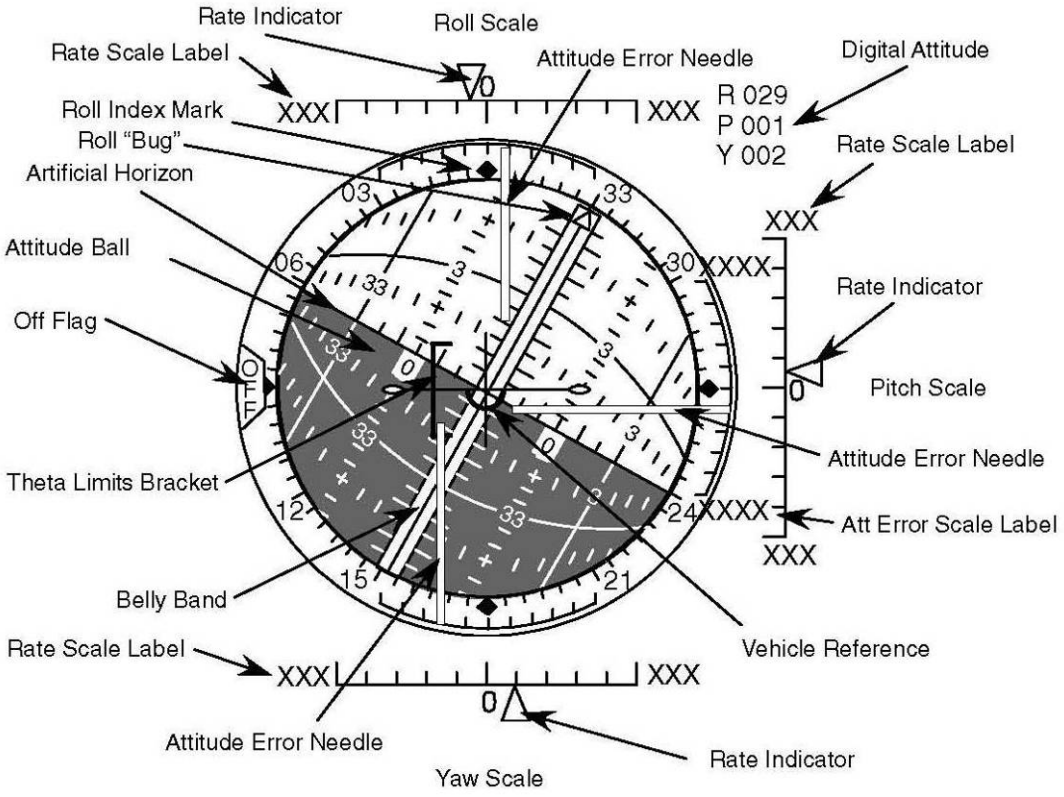

Figure B-79. Diagram of the altitude director indicator.
Source: USA, *Shuttle Crew Operation Manual*, 2.7-4.

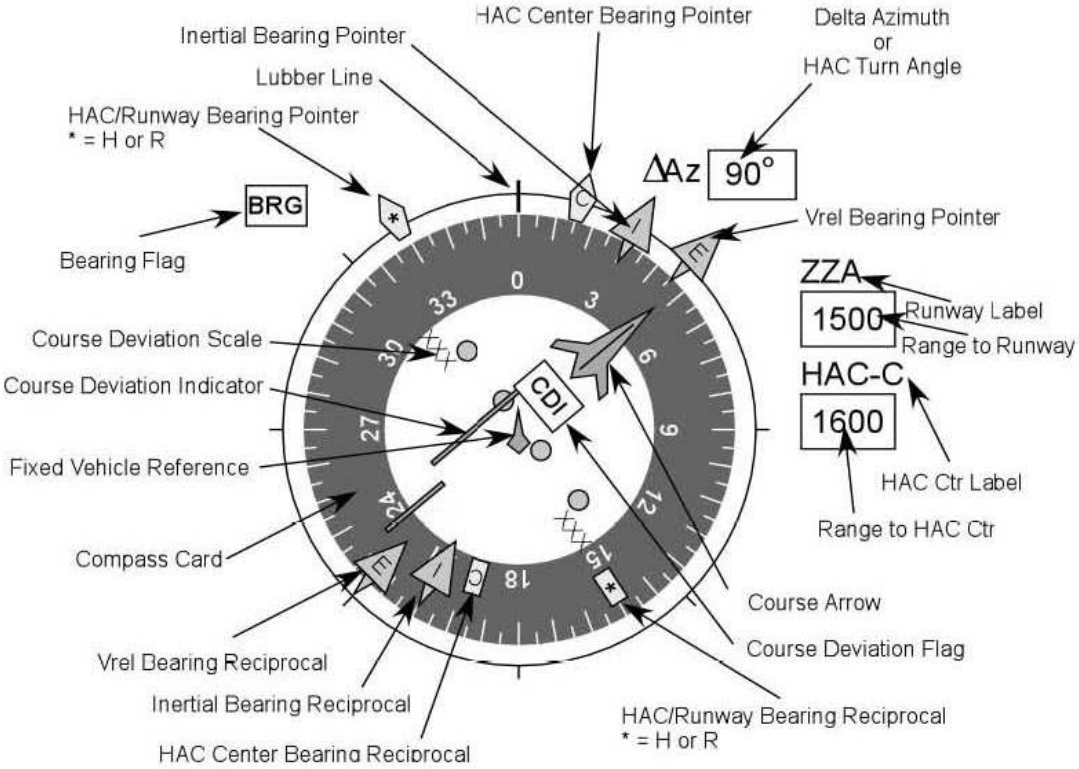

Figure B-80. Diagram of the horizontal situation indicator.
Source: USA, *Shuttle Crew Operation Manual*, 2.7-8.

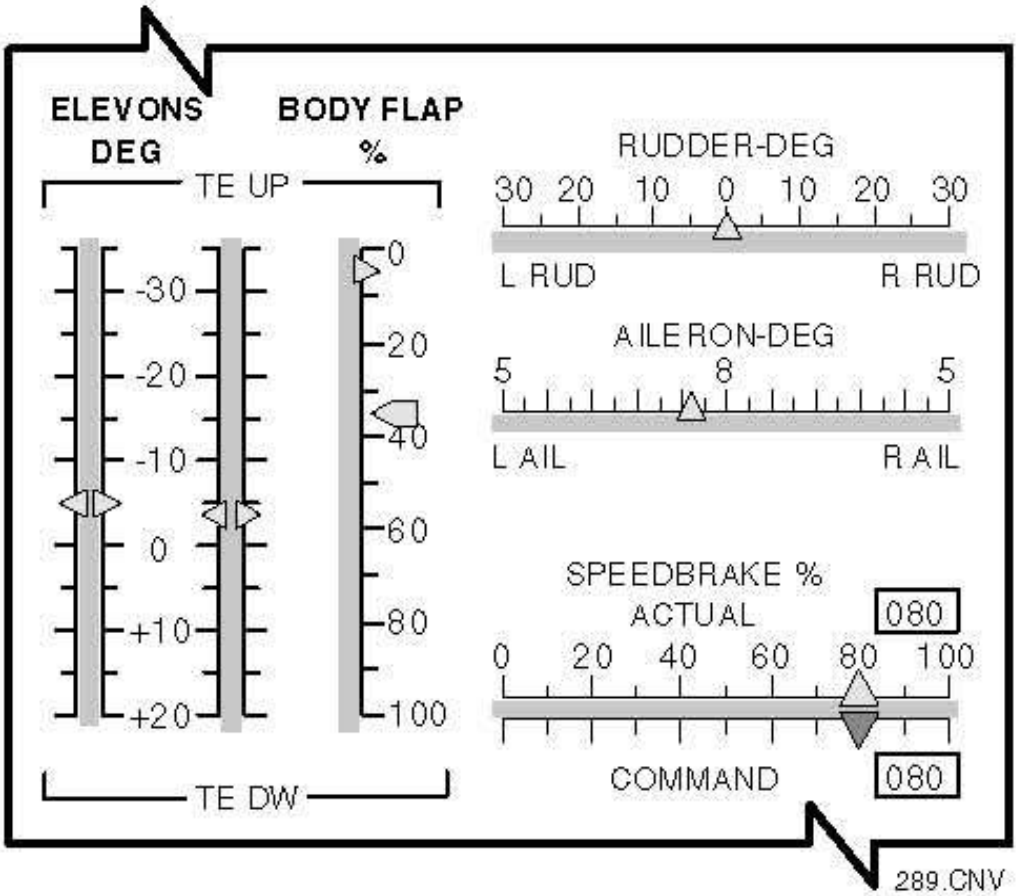

Figure B-81. Diagram of the surface position indicator.
Source: USA, *Shuttle Crew Operation Manual*, 2.7-17.

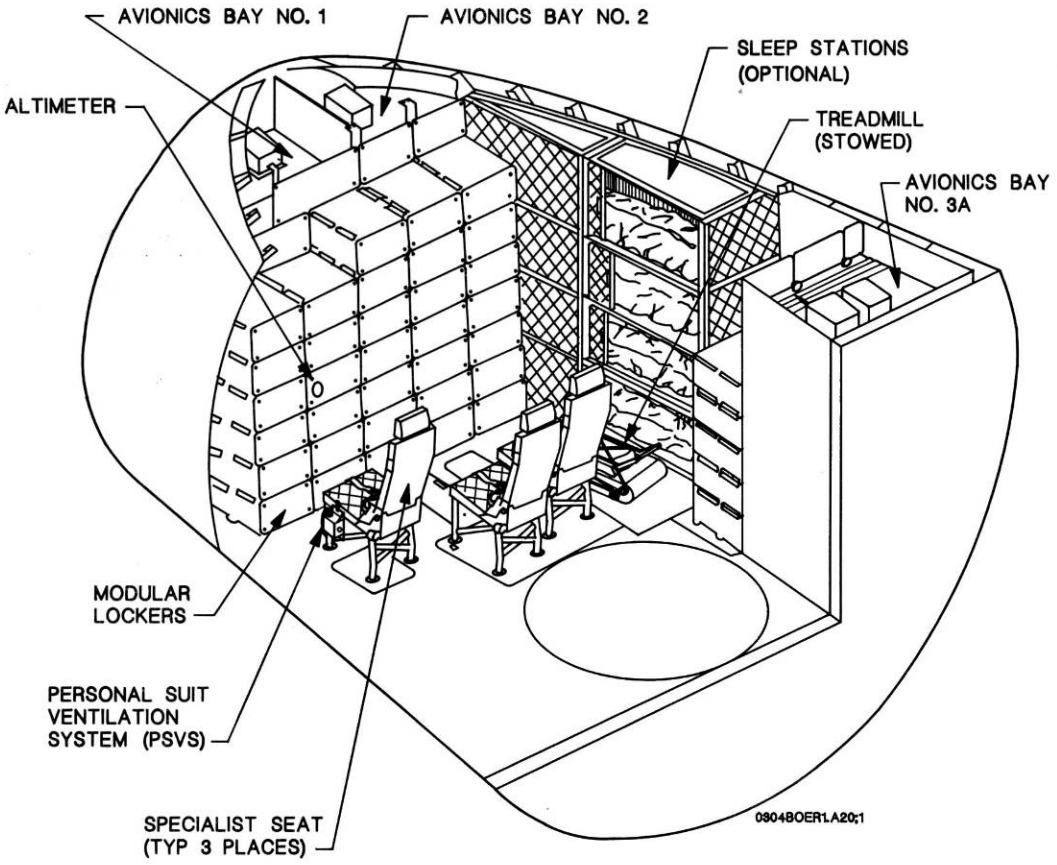

Figure B-82. Diagram of the forward/starboard area of the middeck.
Source: NASA, *Shuttle Operational Data Book*, Volume 4, part 1, Figure 3-4b.

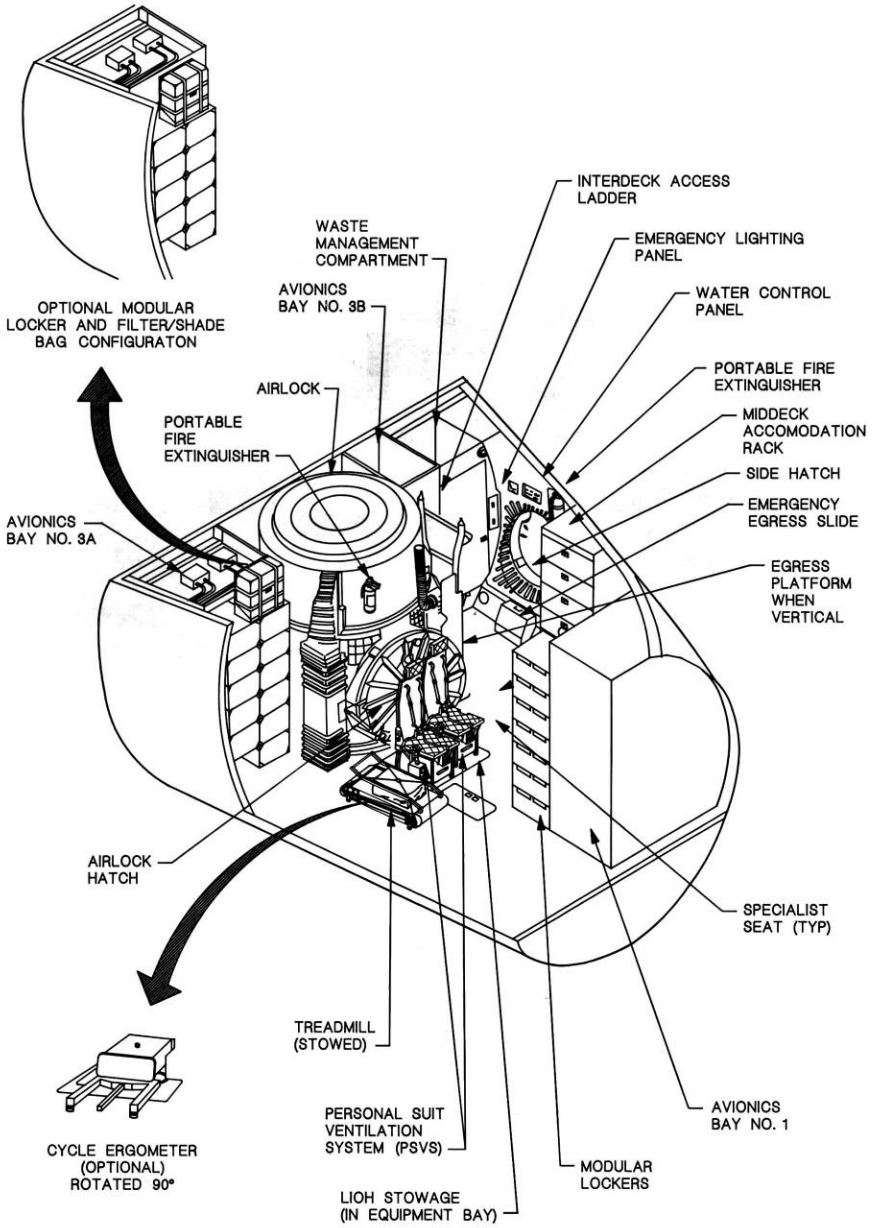

Figure B-83. Diagram of the port/aft area of the middeck, showing internal airlock.
Source: NASA, *Shuttle Operational Data Book*, Volume 4, part 1, Figure 3-4c.

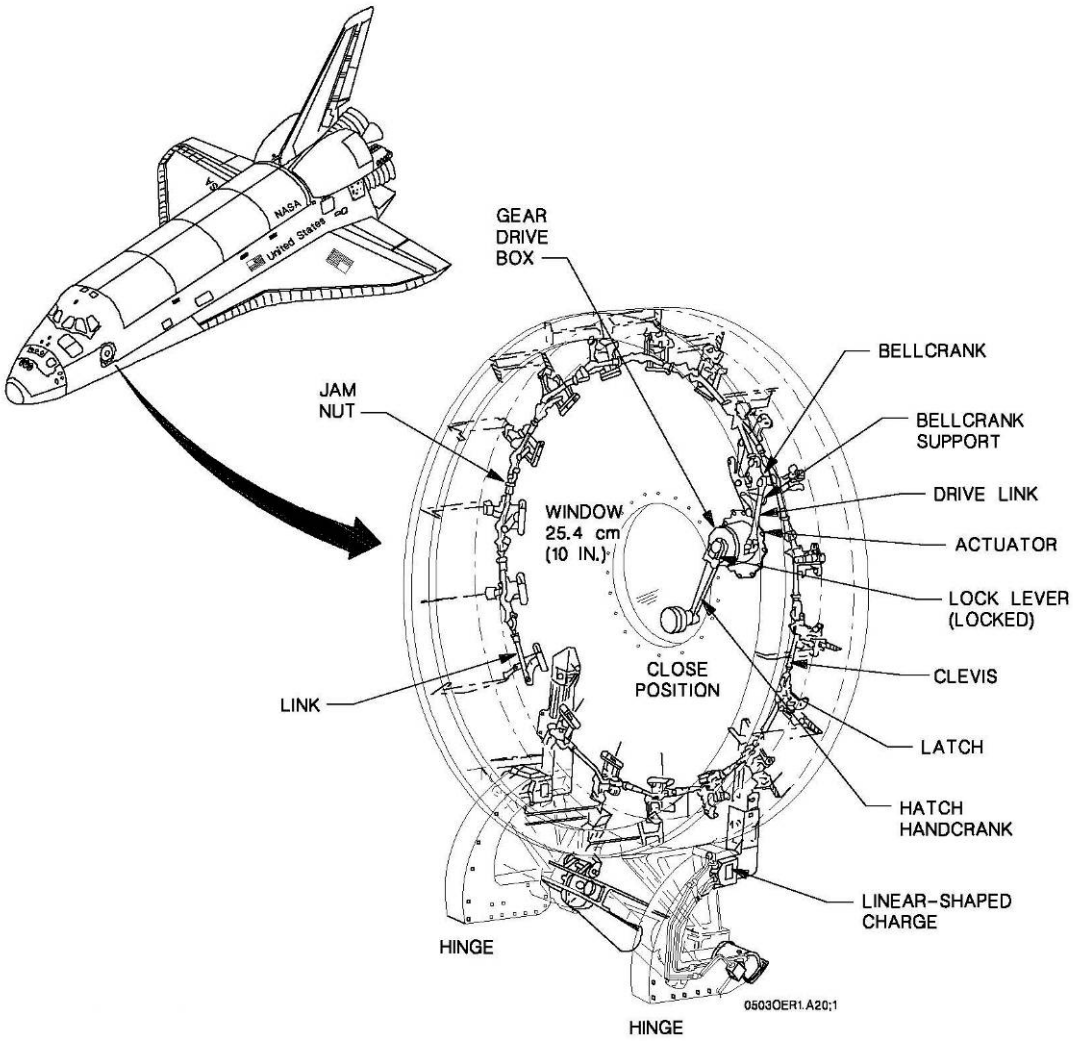

Figure B-84. Diagram of the internal side of the crew hatch.
Source: NASA, *Shuttle Operational Data Book*, Volume 4, part 1, Figure 5-3.

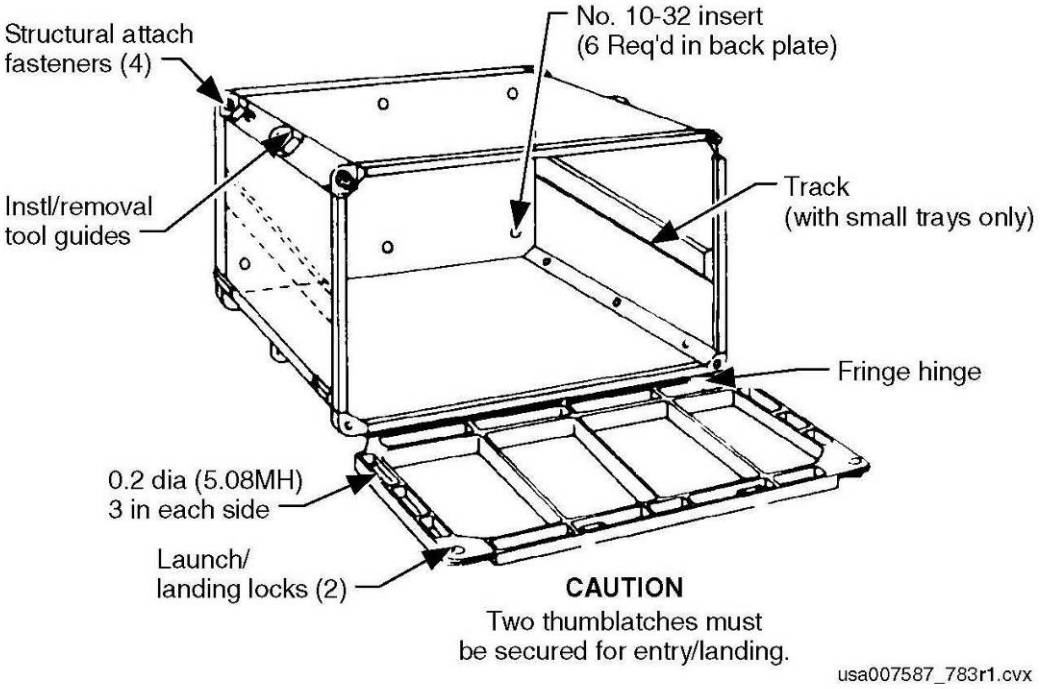

Figure B-85. Diagram of a modular storage locker.
Source: USA, *Shuttle Crew Operation Manual*, 2.24-3.

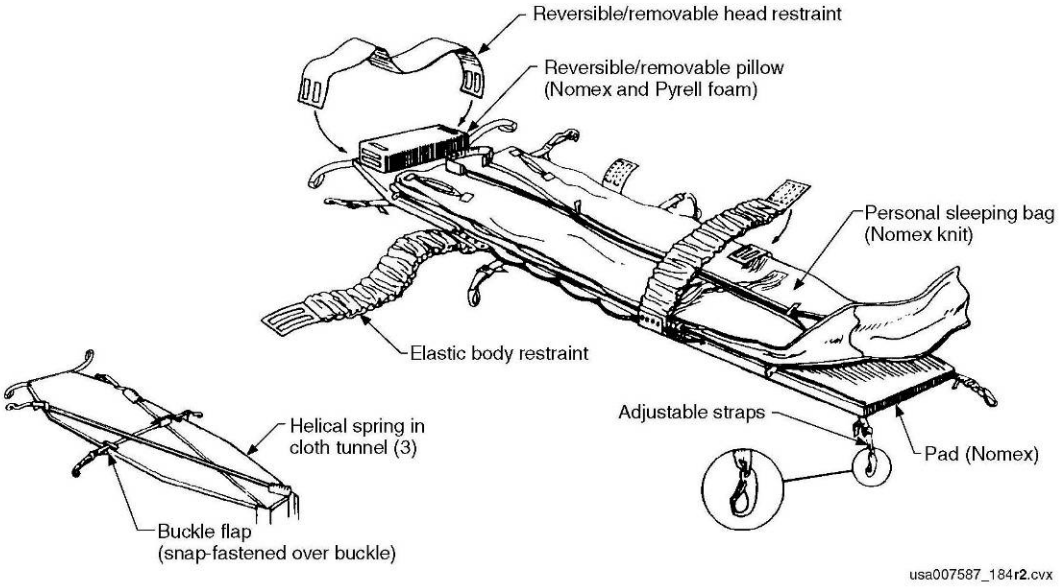

Figure B-86. Diagram of a typical sleeping bag.
Source: USA, *Shuttle Crew Operation Manual*, 2.5-2.

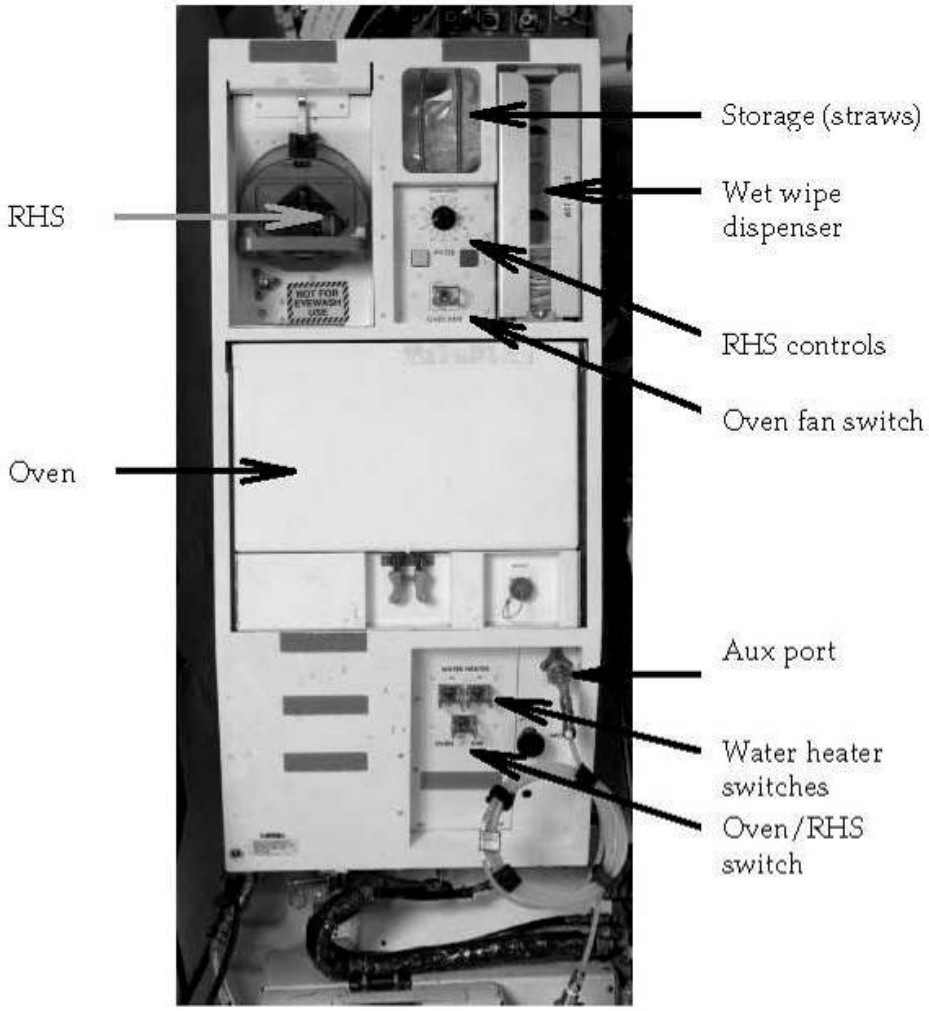

Figure B-87. Diagram of the shuttle galley.
Source: USA, *Shuttle Crew Operation Manual*, 2.12-2.

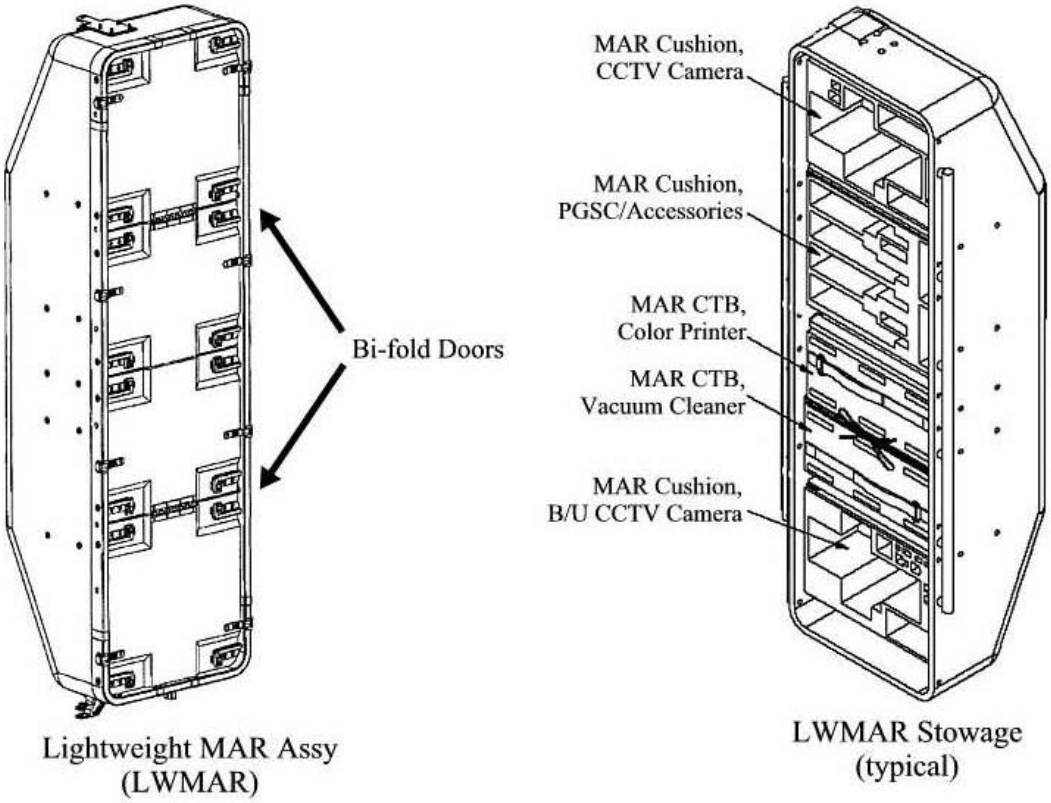

Figure B-88. Diagram of the lightweight middeck accommodation rack.
Source: USA, *Shuttle Crew Operation Manual*, 2.24-7.

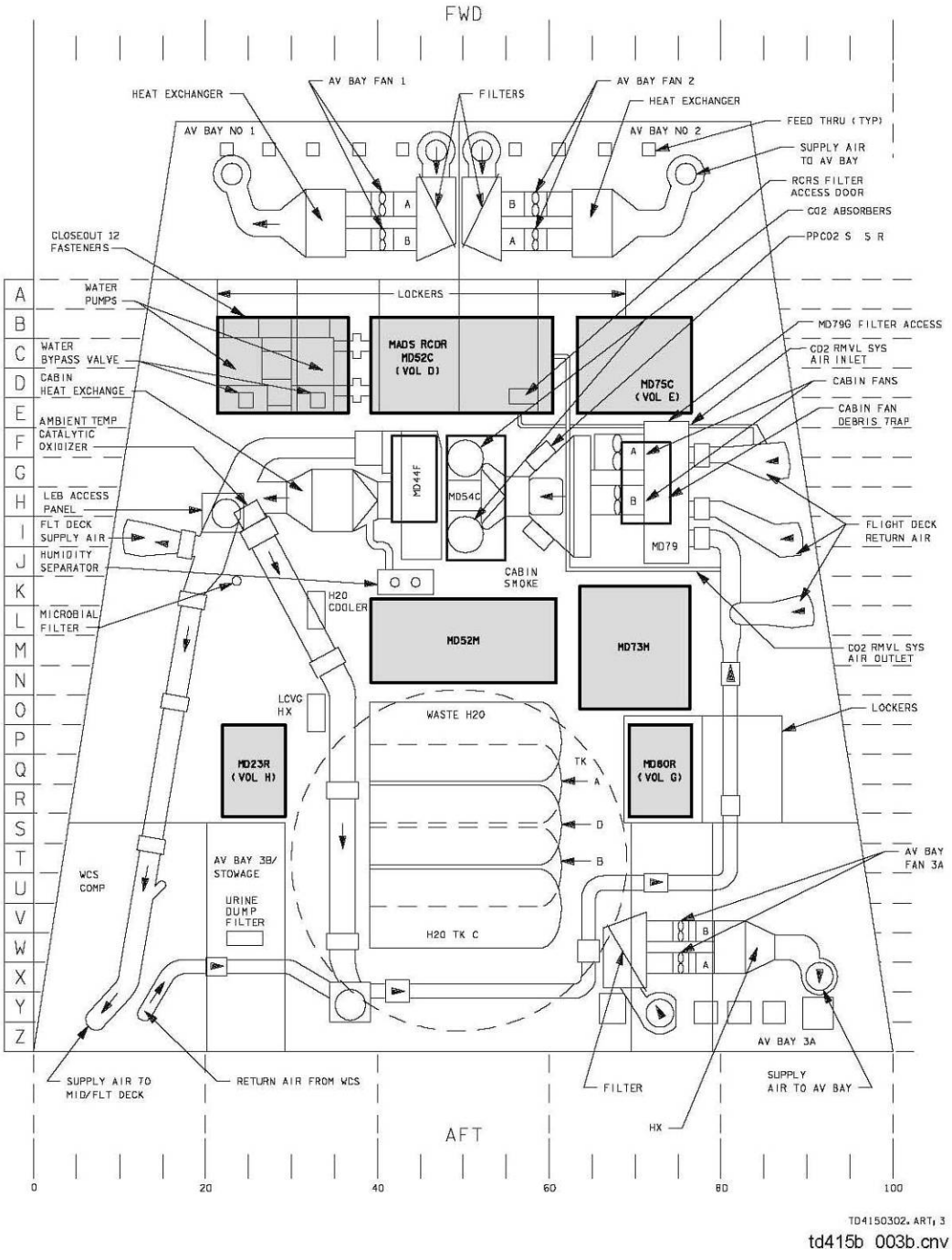

Figure B-89. Diagram of *Discovery's* equipment bay.
Source: USA, *Environmental Control and Life Support System*, 3-4.

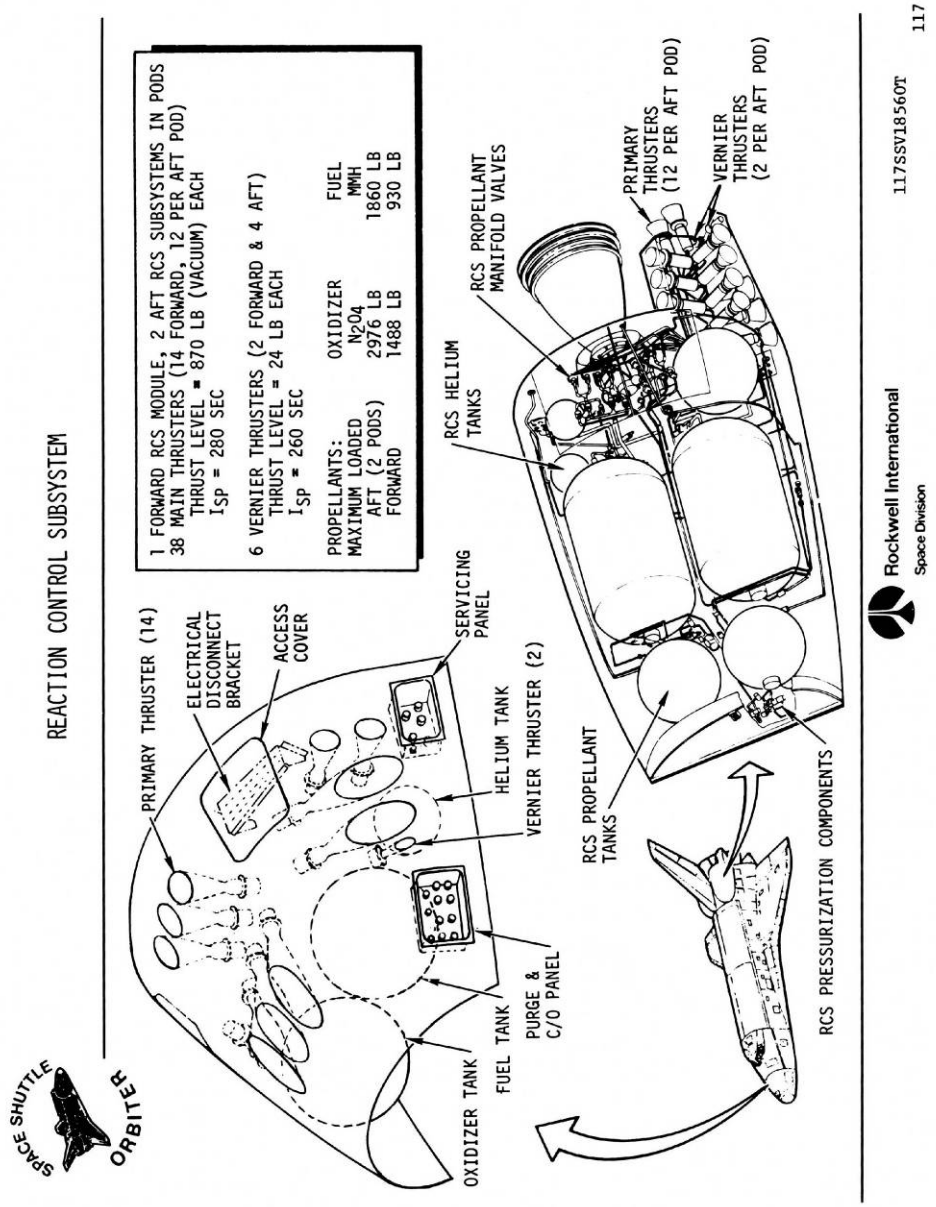

Figure B-90. Diagram of the forward and aft RCS modules, 1978.
Source: NASA Johnson Space Center, Image Repository, S78-23440.

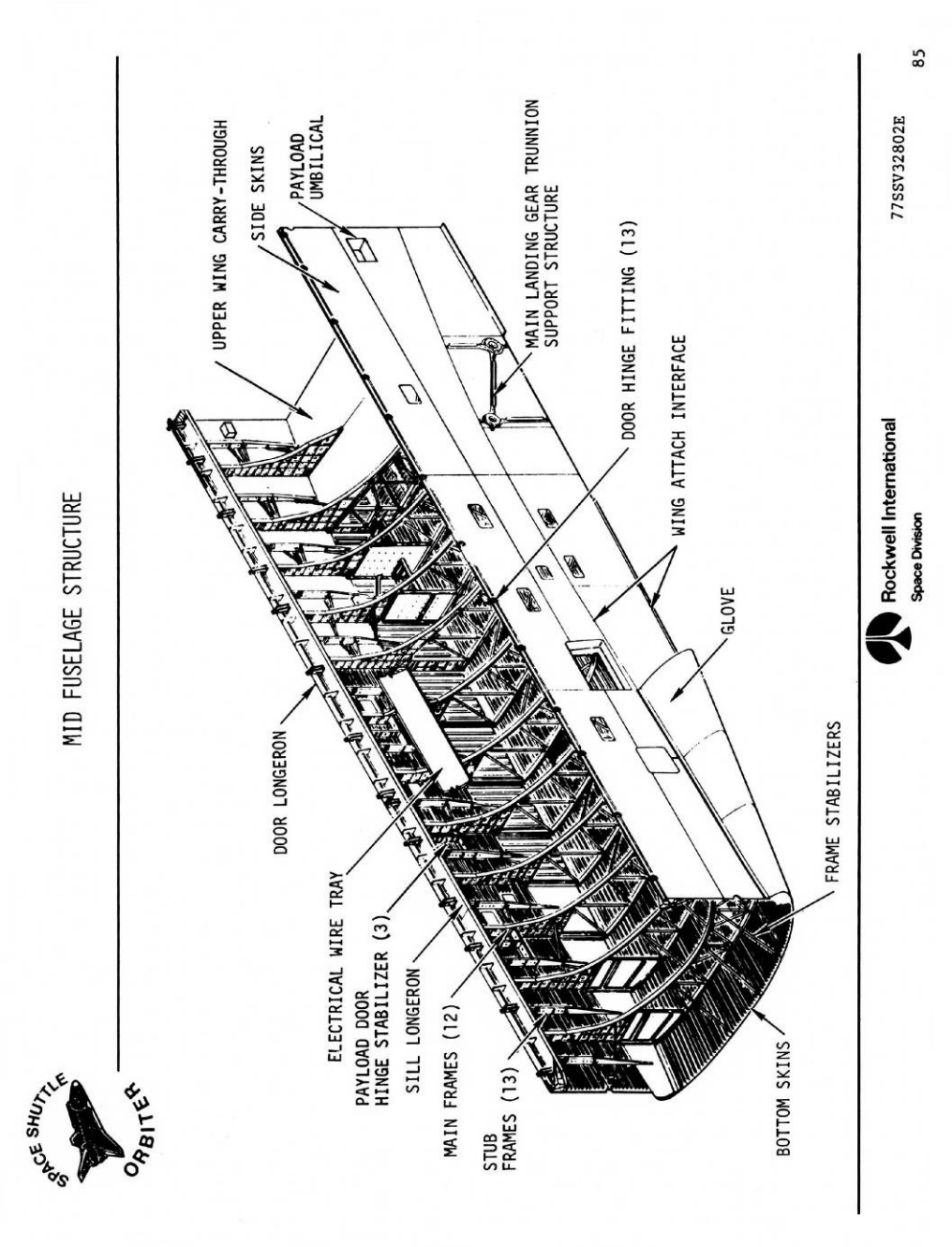

Figure B-91. Diagram of the midfuselage, 1978.
Source: NASA Johnson Space Center, Image Repository, S78-23425.

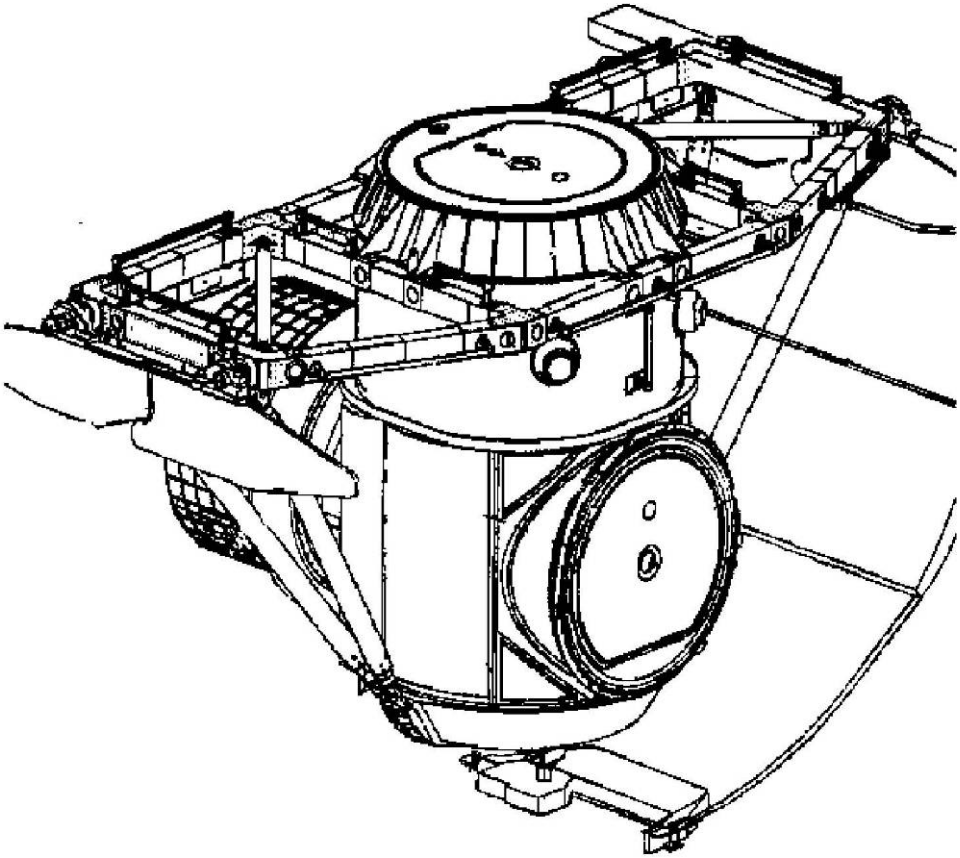

Figure B-92. Illustration of the external airlock.
Source: USA, *Shuttle Crew Operation Manual*, 2.11-12.

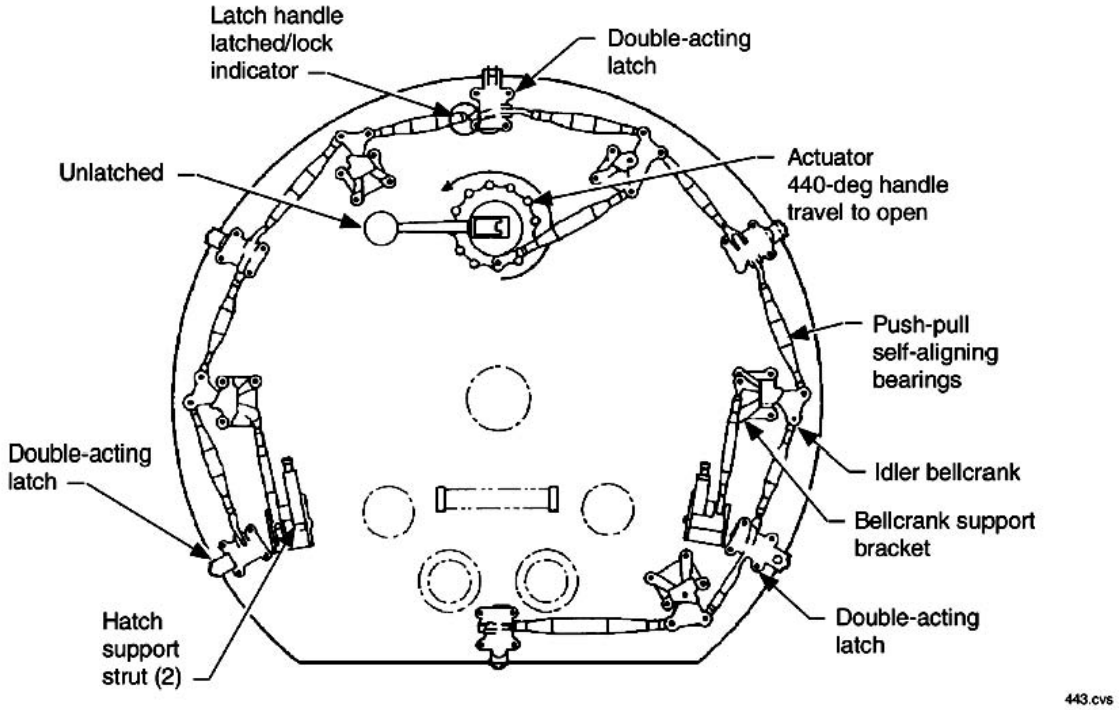

Figure B-93. Diagram of an external airlock hatch.
Source: USA, *Shuttle Crew Operation Manual*, 2.11-13.

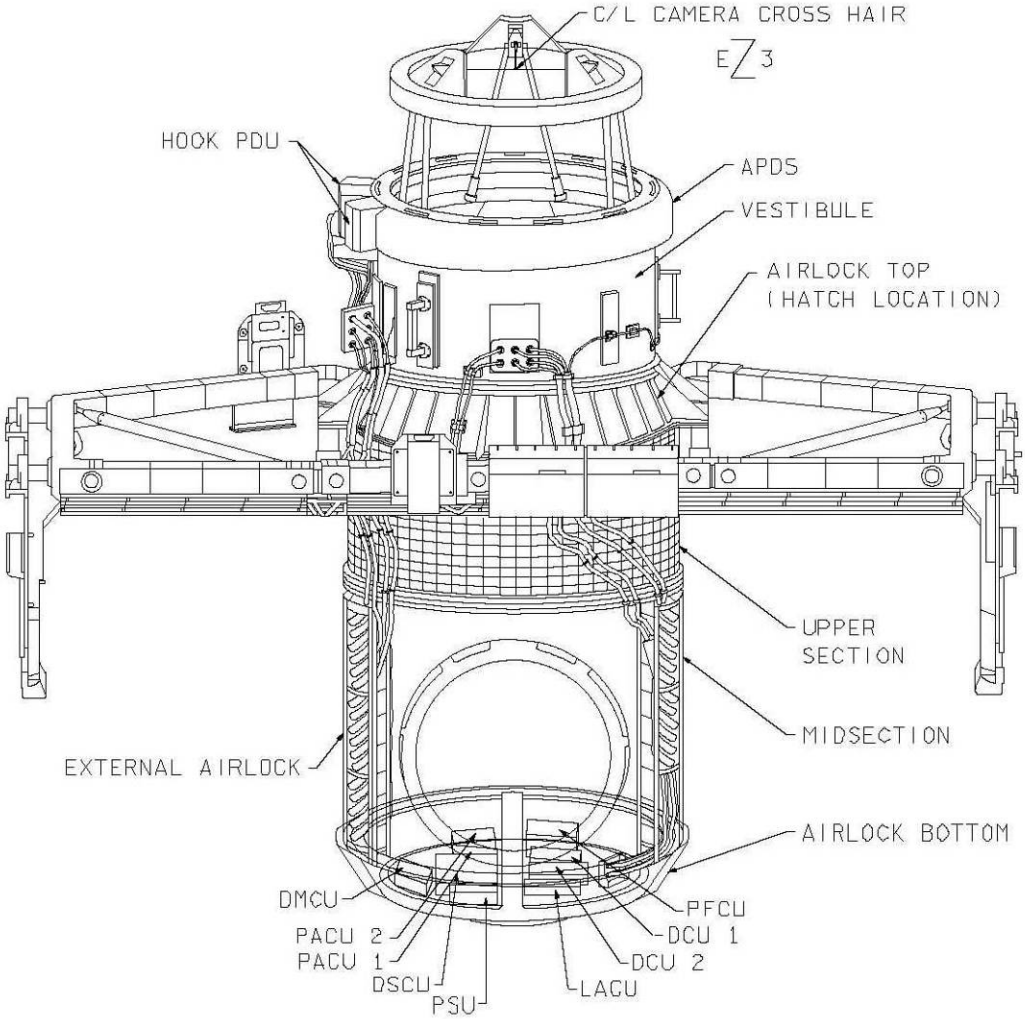

Figure B-94. Diagram of the external airlock/orbiter docking system.
Source: USA, *Shuttle Crew Operation Manual*, 2.19-1.

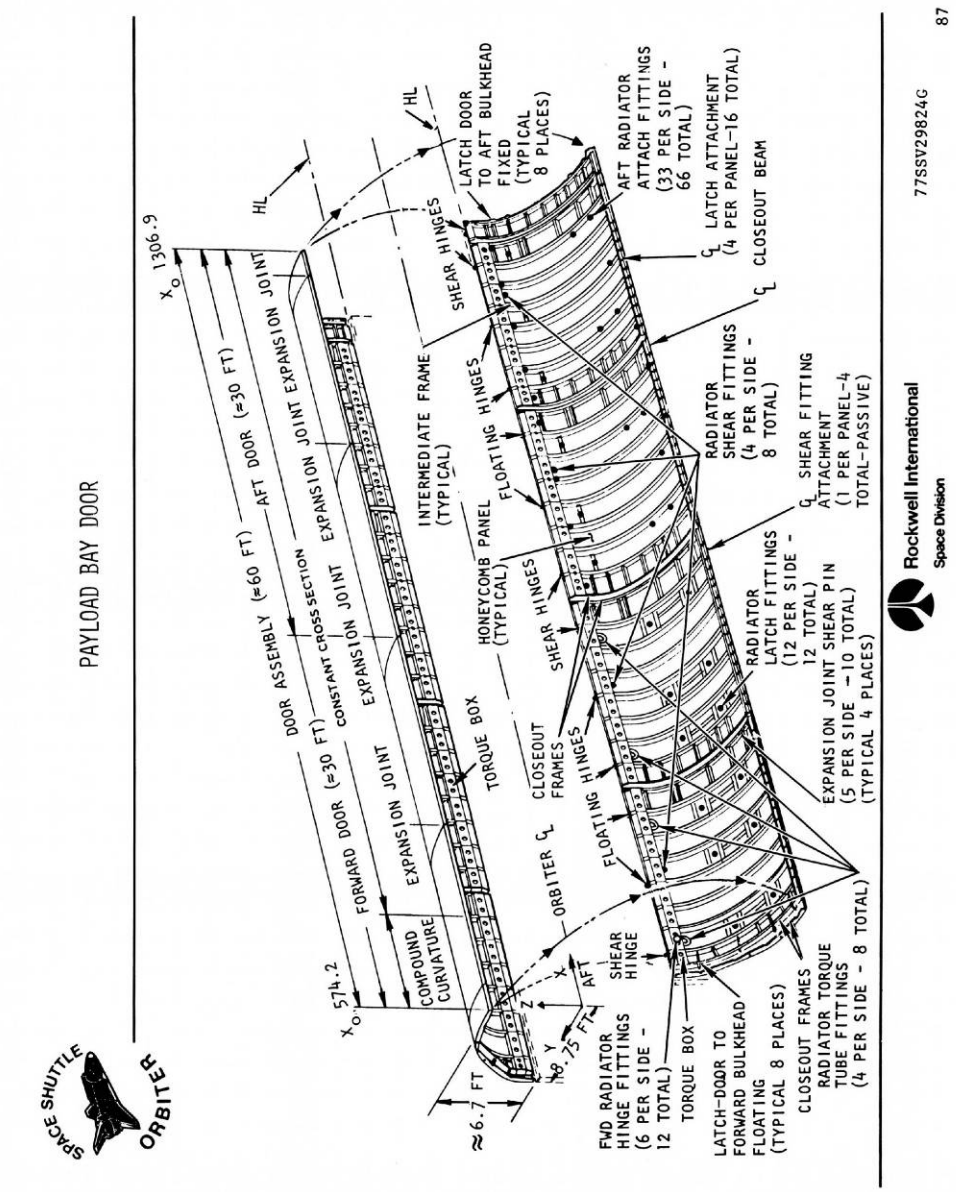

Figure B-95. Diagram of the payload bay doors, 1978.
Source: NASA Johnson Space Center, Image Repository, S78-23426.

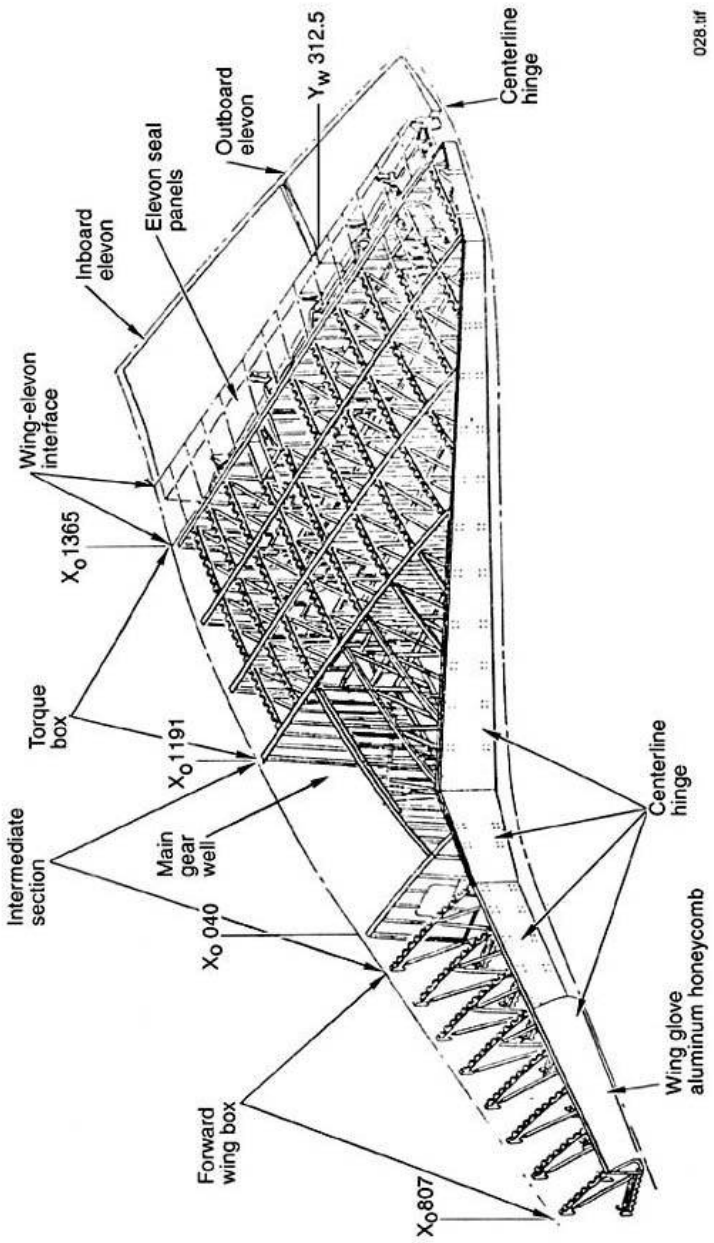

Figure B-96. Diagram of the wing structure.
Source: USA, *Shuttle Crew Operation Manual*, 1.2-8.

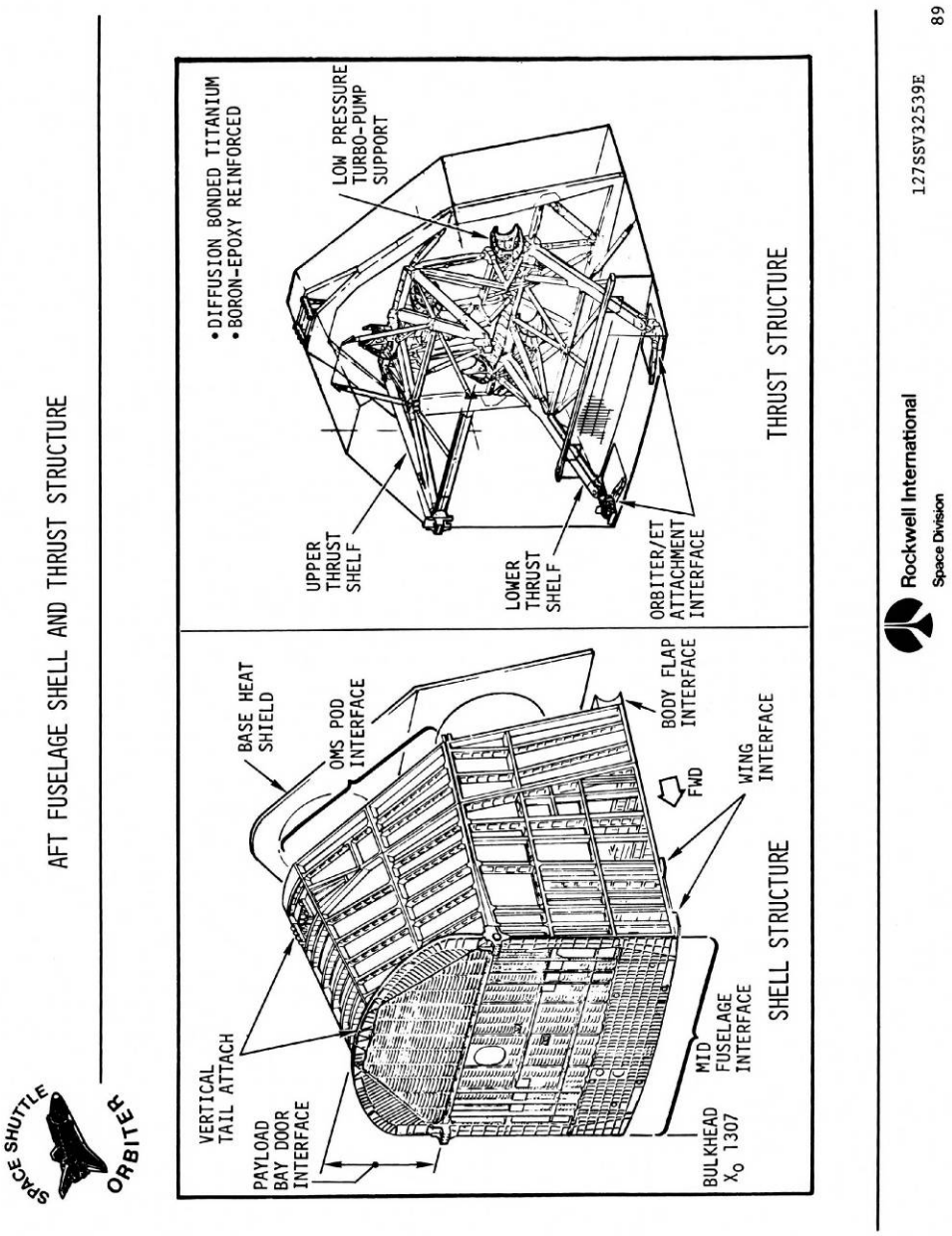

Figure B-97. Diagram of the aft fuselage, 1978.
Source: NASA Johnson Space Center, Image Repository, S78-23427.

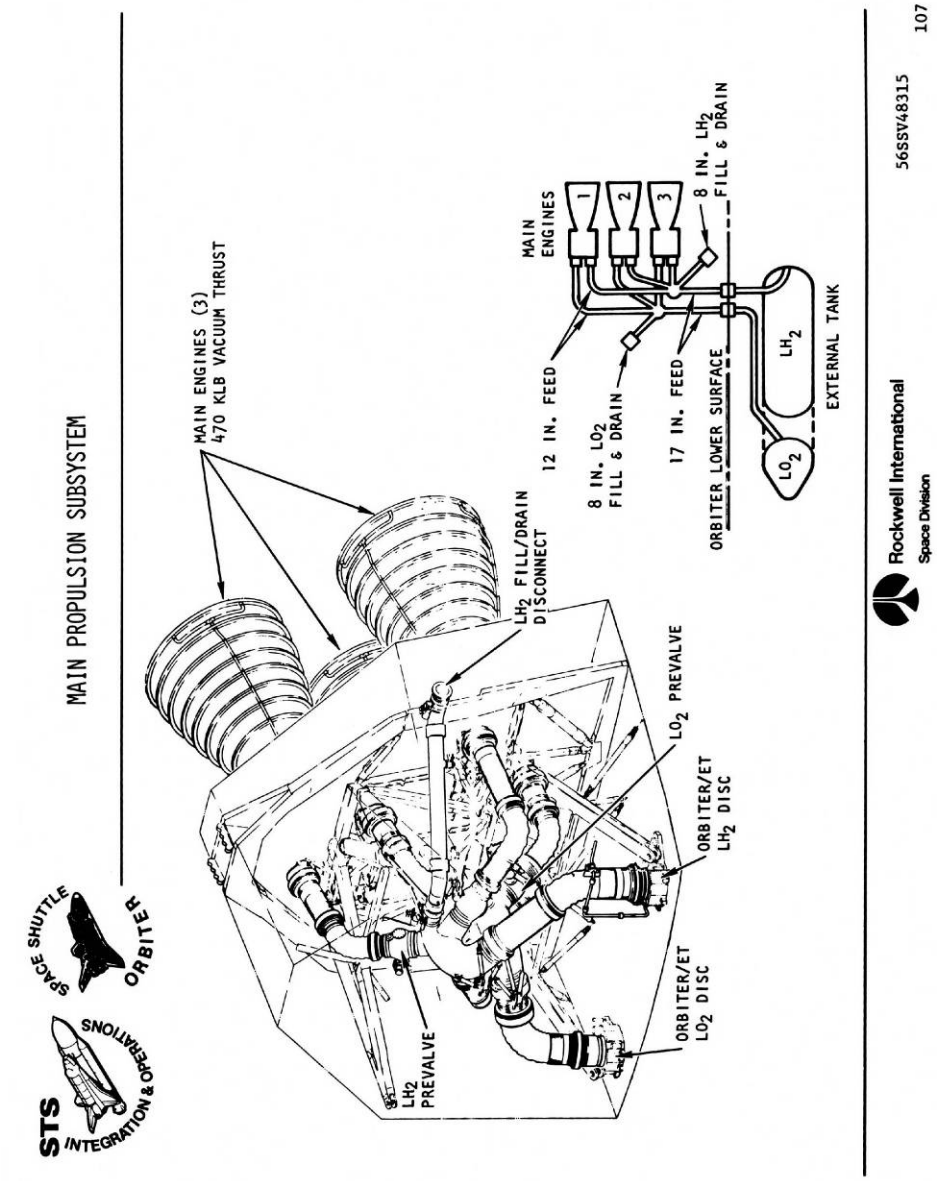

Figure B-98. Diagram of the main propulsion system, 1978.
Source: NASA Johnson Space Center, Image Repository, S78-23436.

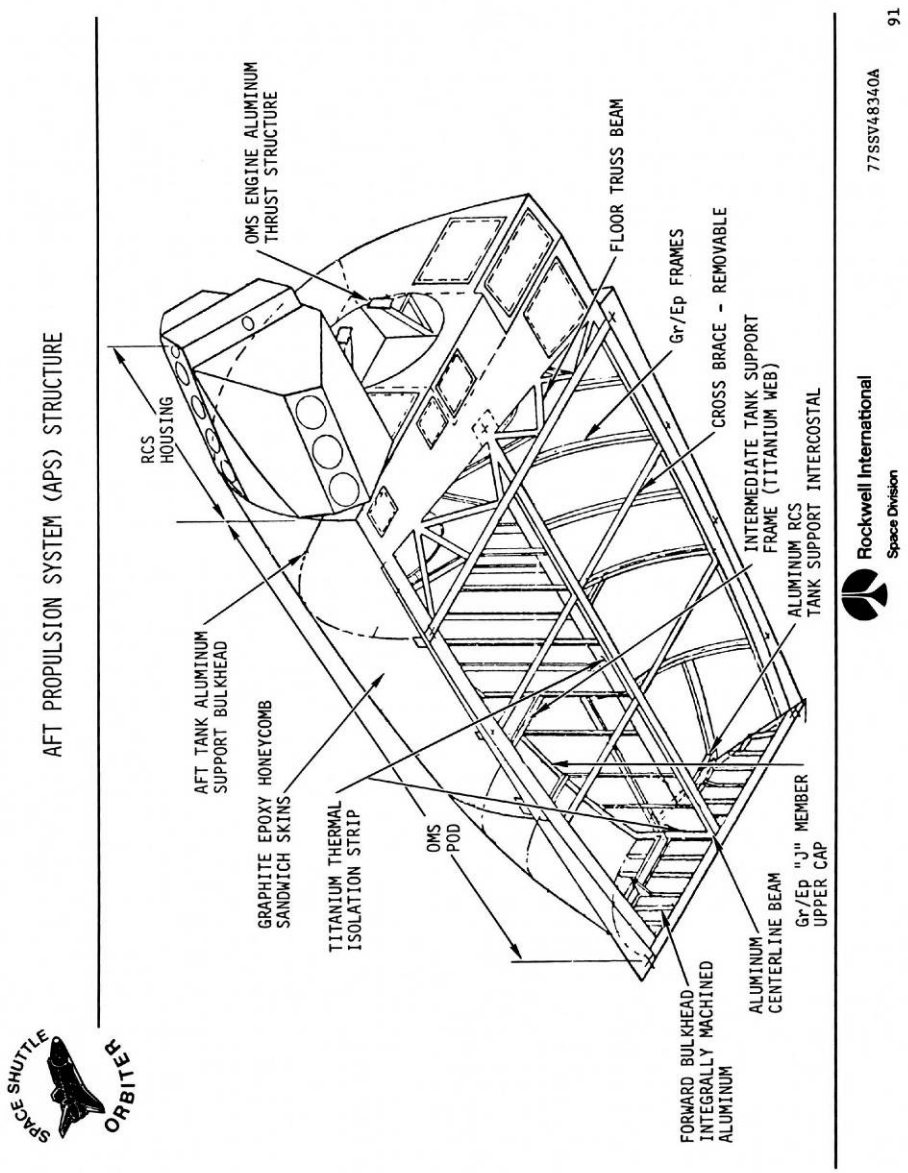

Figure B-99. Diagram of an OMS/RCS pod structure, 1978.
Source: NASA Johnson Space Center, Image Repository, S78-23428.

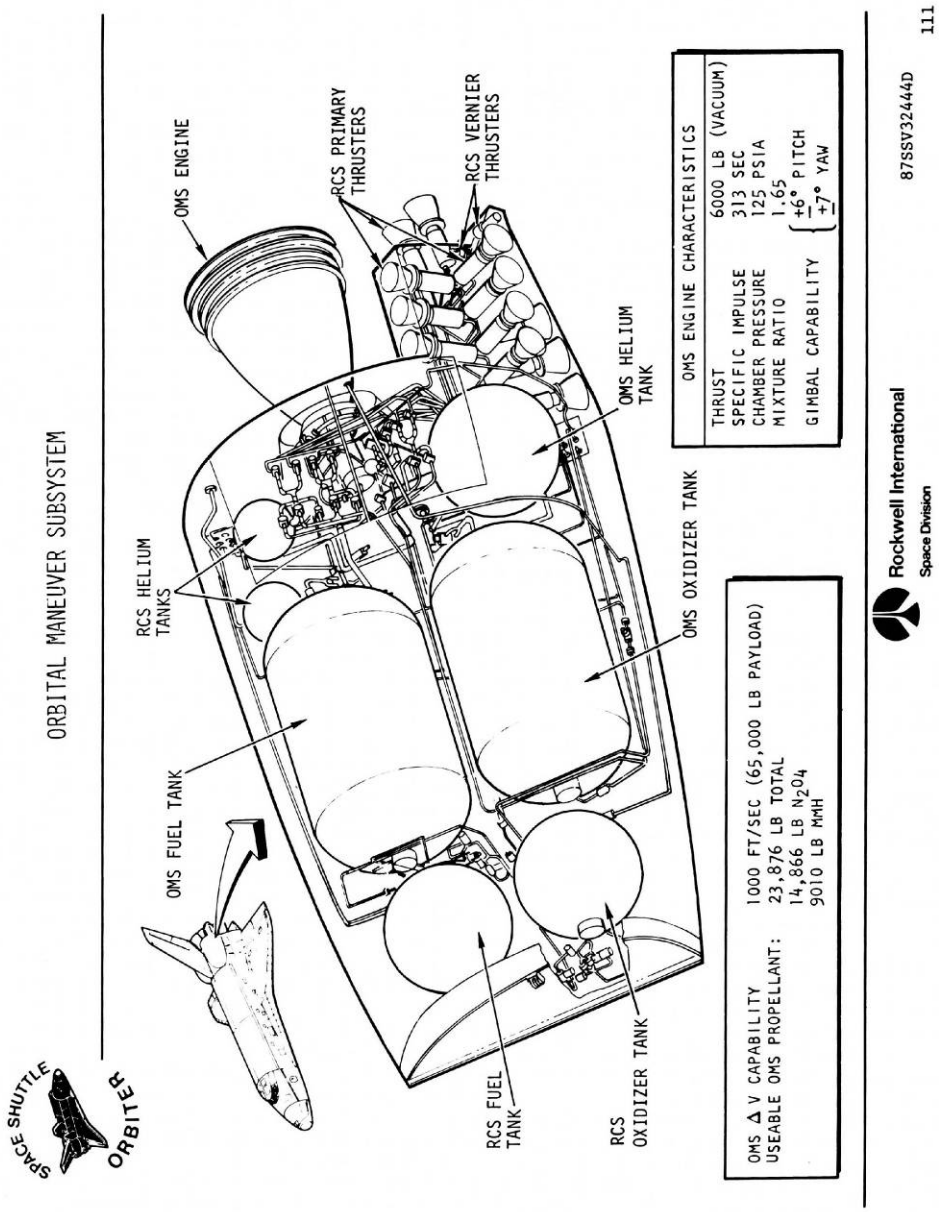

Figure B-100. Diagram of the OMS/RCS pod interior, 1978.
Source: NASA Johnson Space Center, Image Repository, S78-23438.

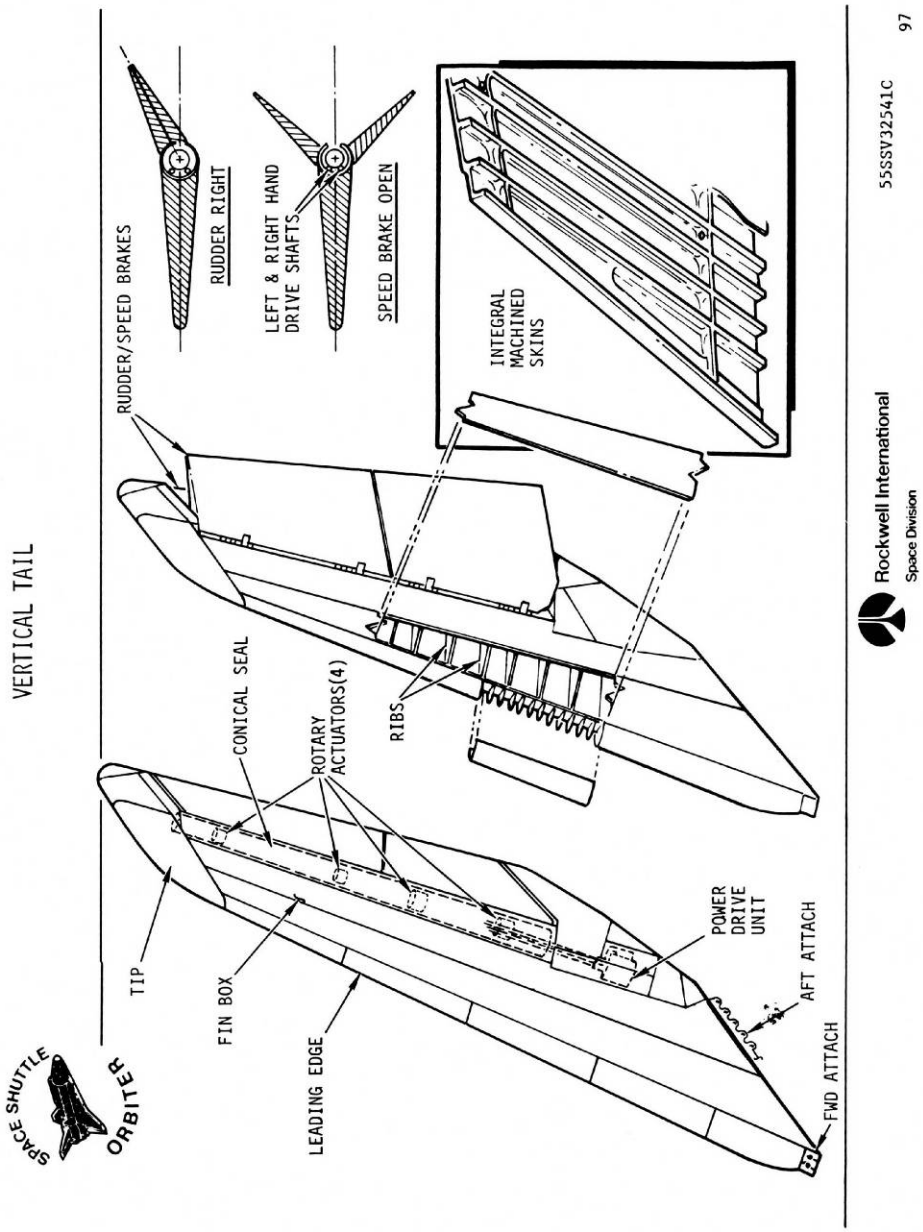

Figure B-101. Diagram of the vertical stabilizer, 1978.
Source: NASA Johnson Space Center, Image Repository, S78-23431.

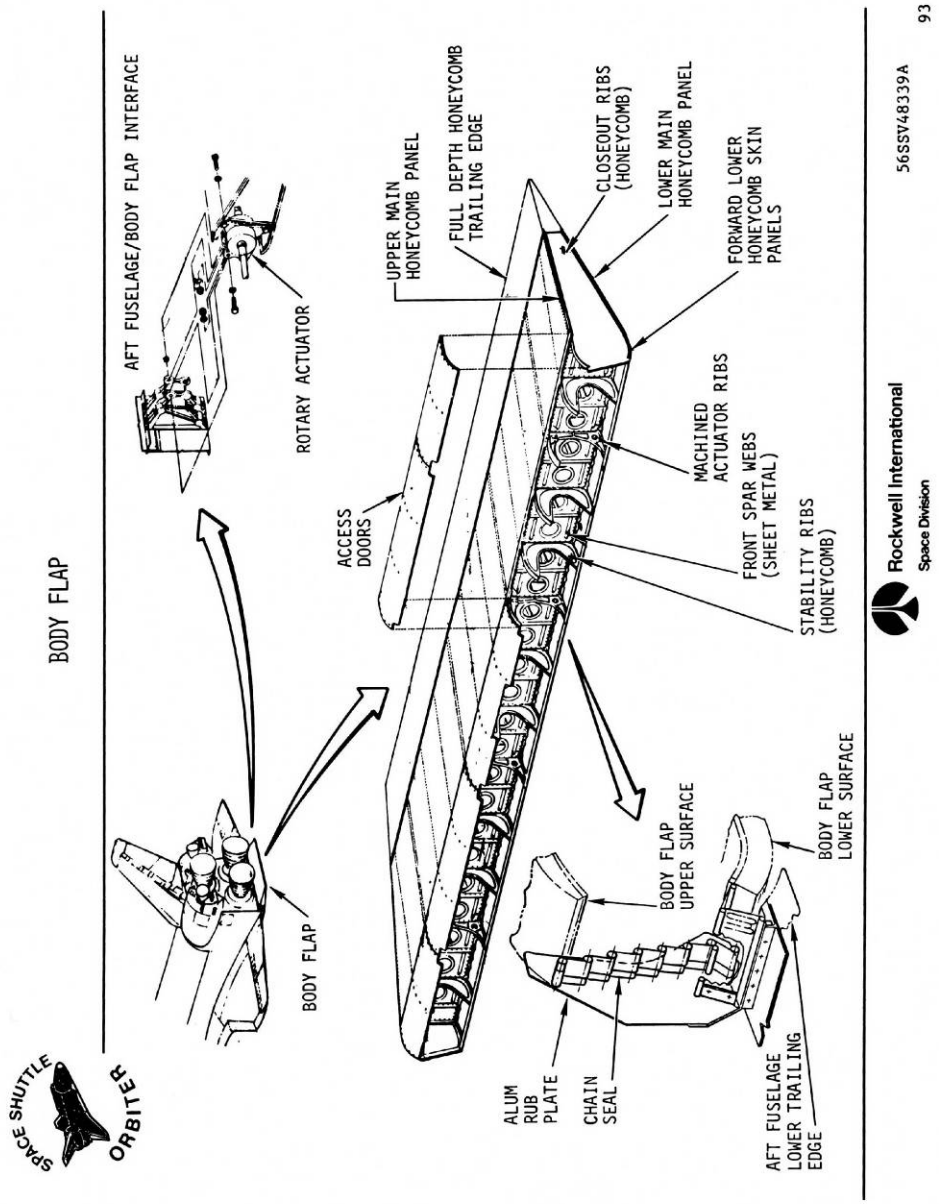

Figure B-102. Diagram of the body flap, 1978.
Source: NASA Johnson Space Center, Image Repository, S78-23429.

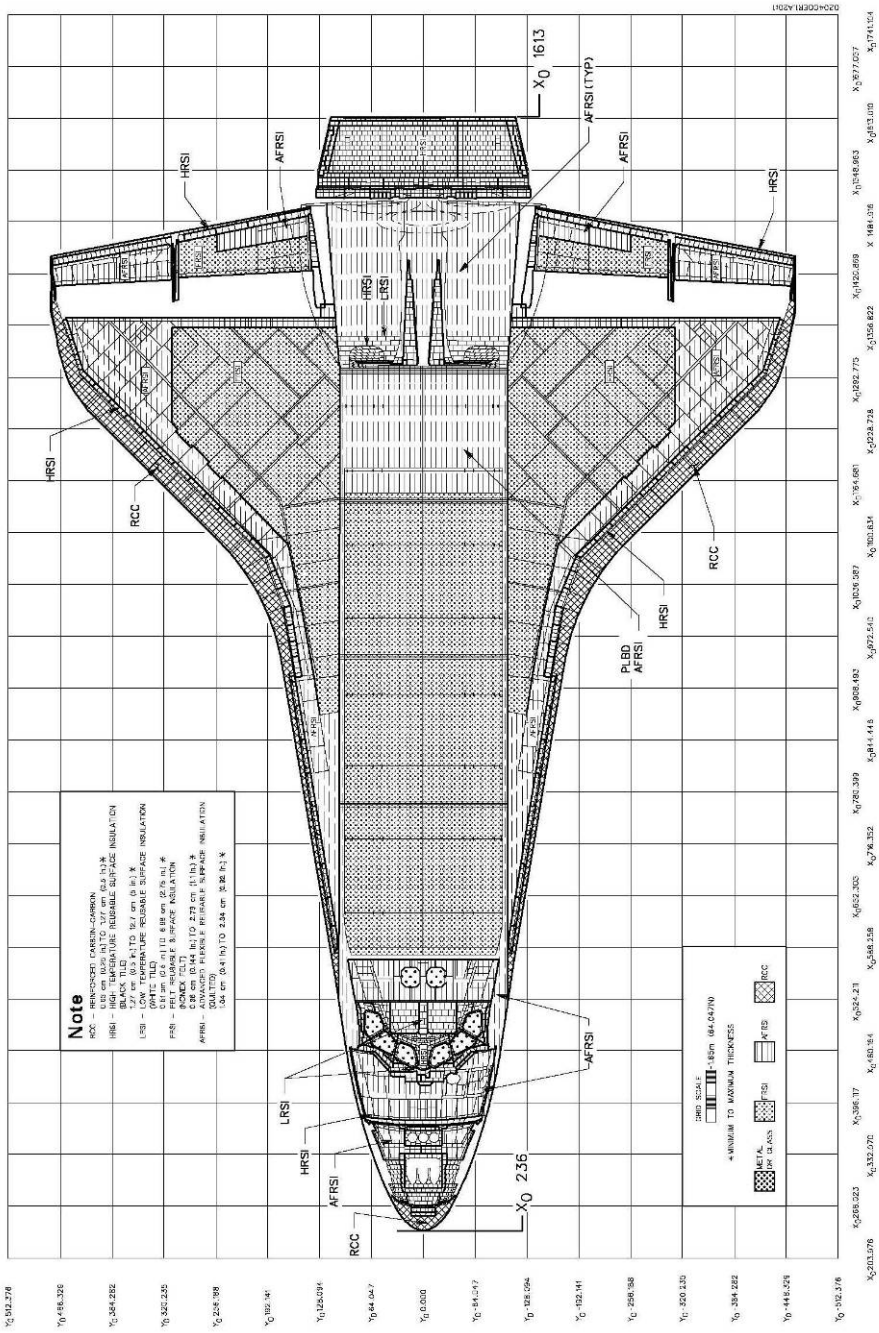

Figure B-103. Diagram of the TPS on the top of *Discovery*.
Source: NASA, *Shuttle Operational Data Book*, Volume 4, part 2, Figure 2-4c.

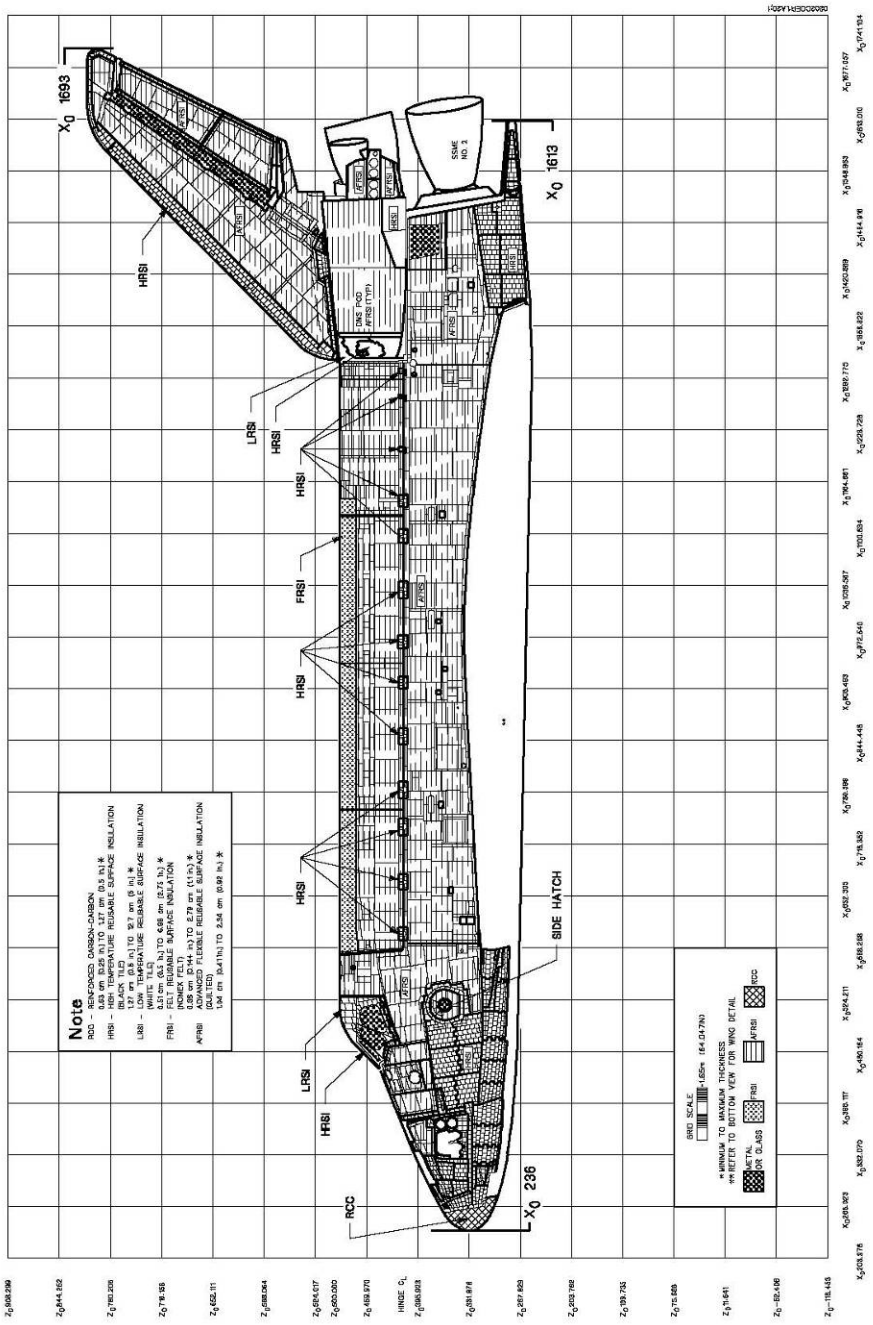

Figure B-104. Diagram of the TPS on the port side of *Discovery*.
Source: NASA, *Shuttle Operational Data Book*, Volume 4, part 2, Figure 2-2c.

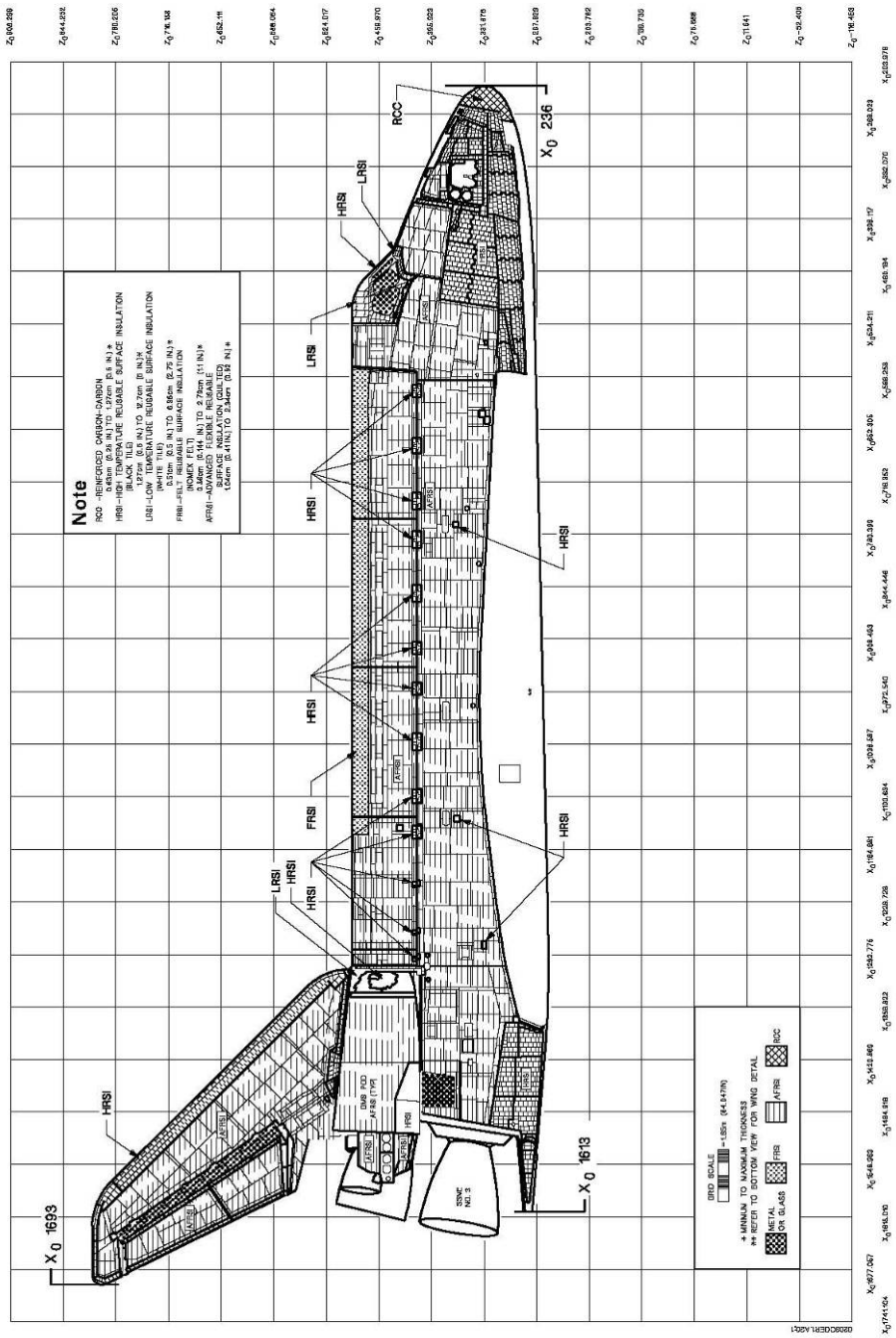

Figure B-105. Diagram of the TPS on the starboard side of *Discovery*.
Source: NASA, *Shuttle Operational Data Book*, Volume 4, part 2, Figure 2-3c.

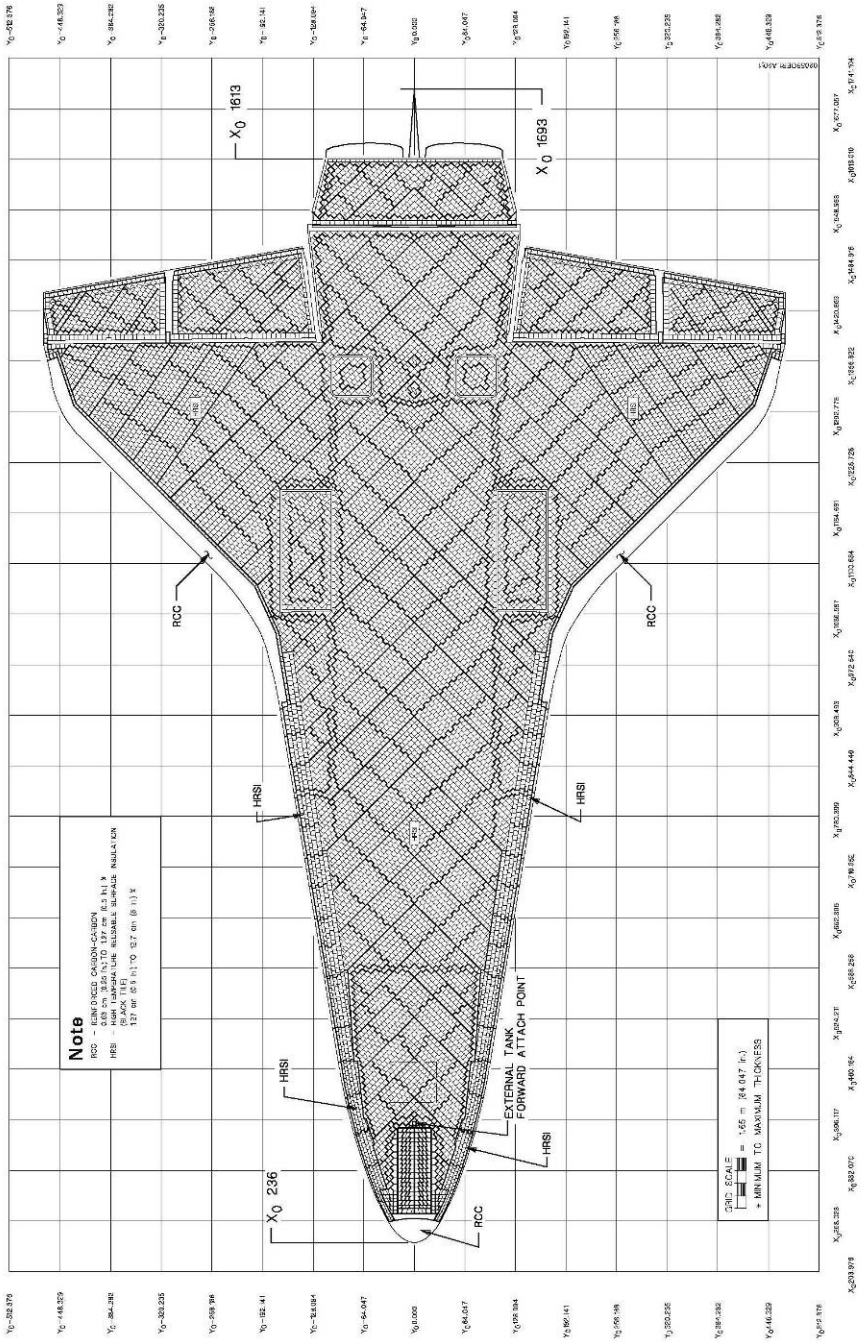

Figure B-106. Diagram of the TPS on the bottom of *Discovery*.
Source: NASA, *Shuttle Operational Data Book*, Volume 4, part 2, Figure 2-5b.

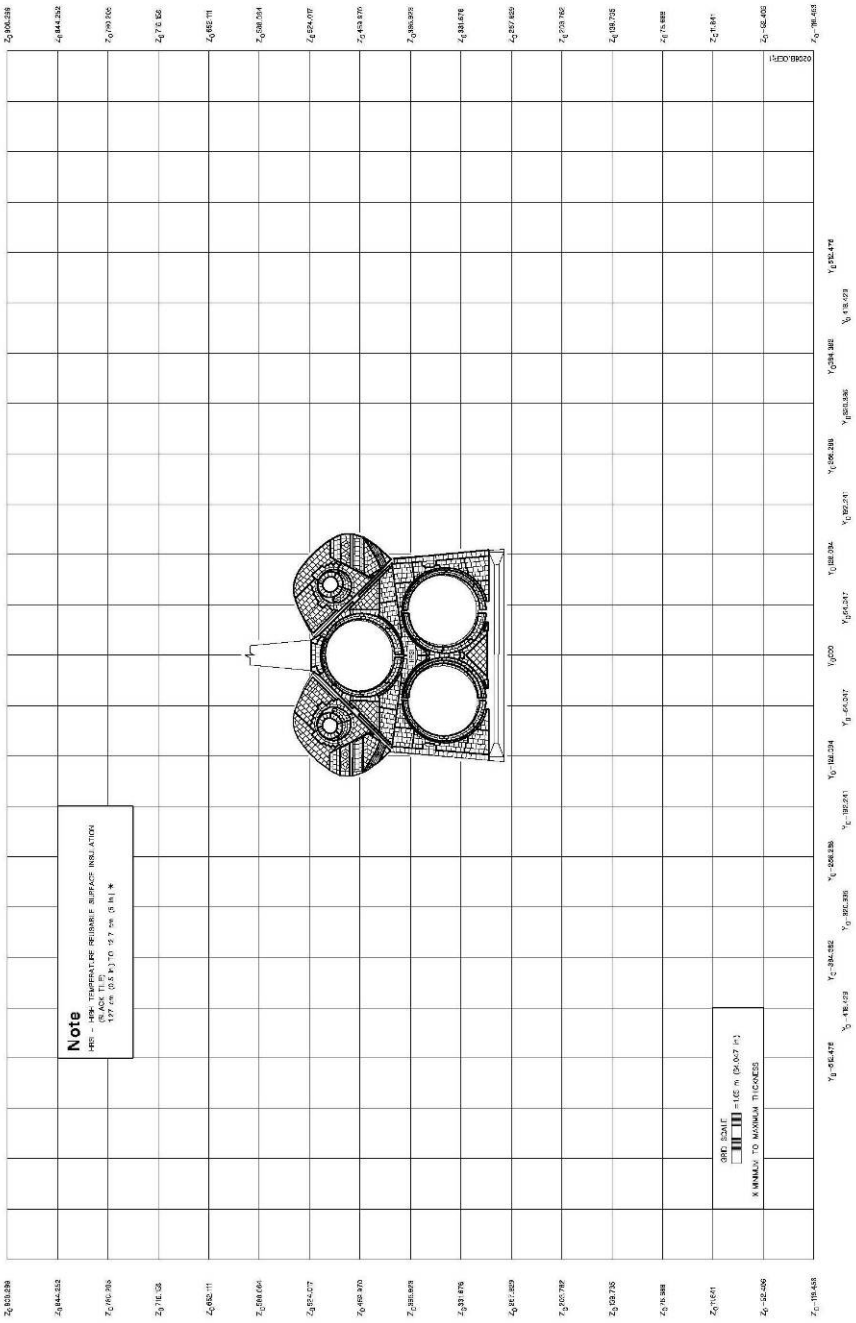

Figure B-107. Diagram of the TPS on the aft of *Discovery*.
Source: NASA, *Shuttle Operational Data Book*, Volume 4, part 2, Figure 2-6b.

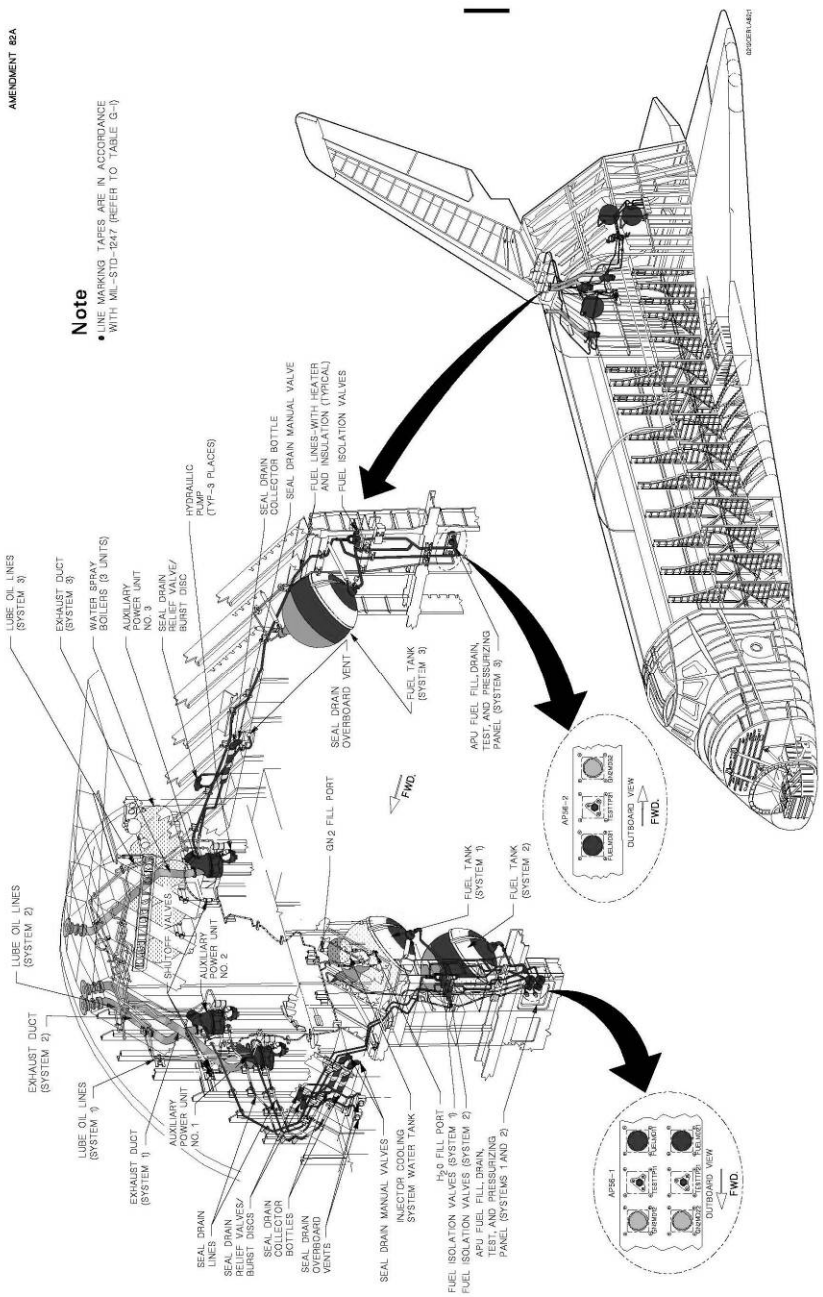

Figure B-108. Diagram of the APU system.
Source: NASA, *Shuttle Operational Data Book*, Volume 4, part 1, Figure 2-12.

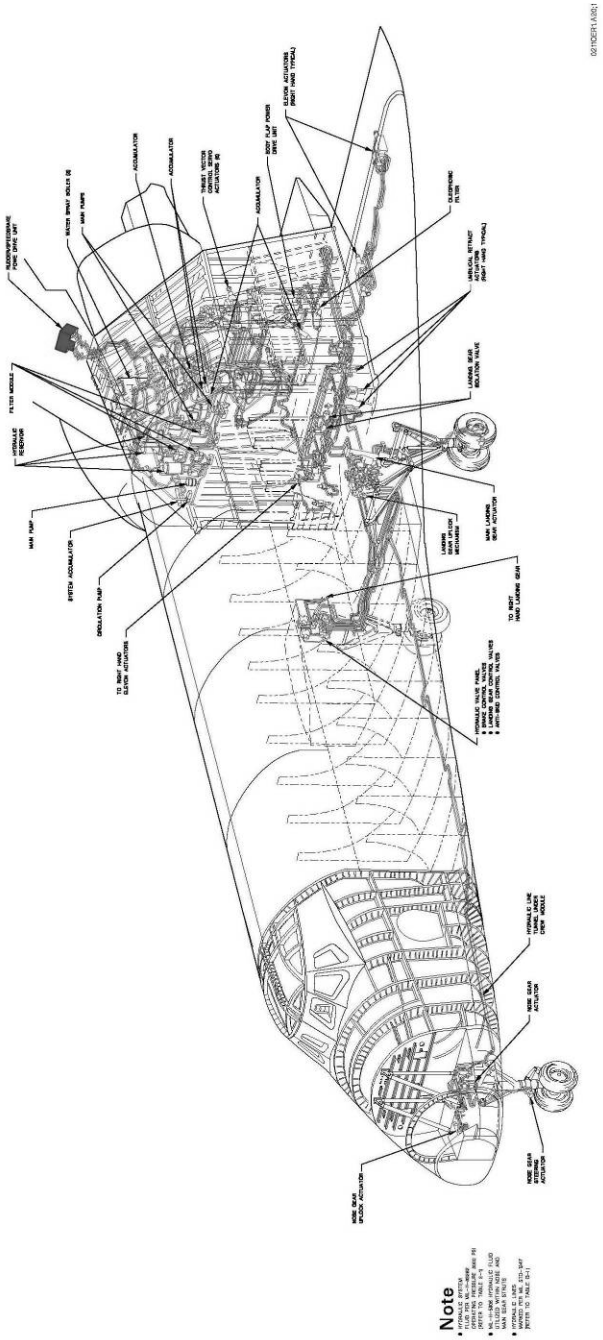

Figure B-109. Diagram of the hydraulics system.
Source: NASA, *Shuttle Operational Data Book*, Volume 4, part 1, Figure 2-11.

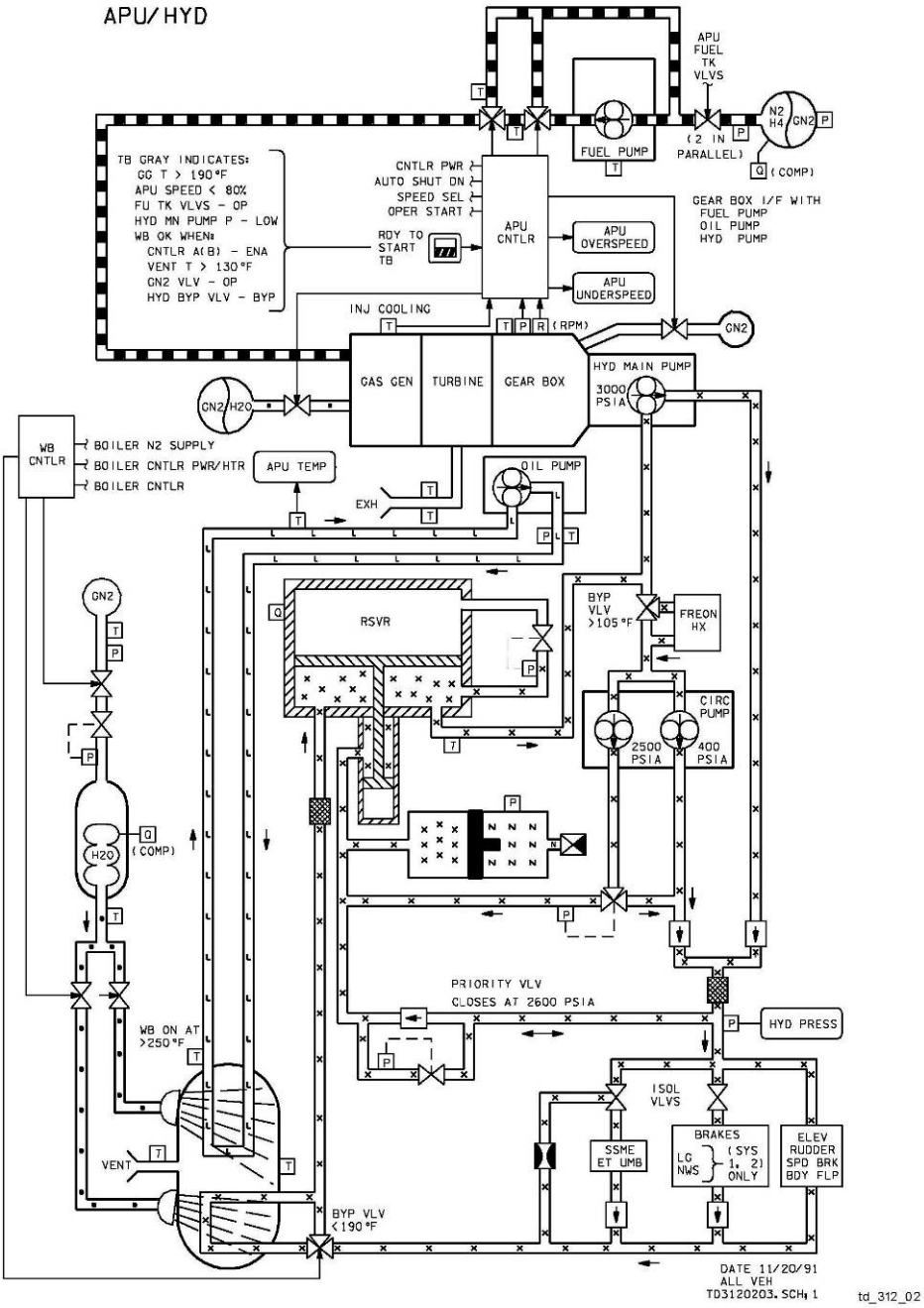

Figure B-110. Schematic of the APU/Hydraulics/Water Spray Boiler system.
Source: USA. *APU/Hydraulic/Water Spray Boiler Systems Training Manual*, 2-4.

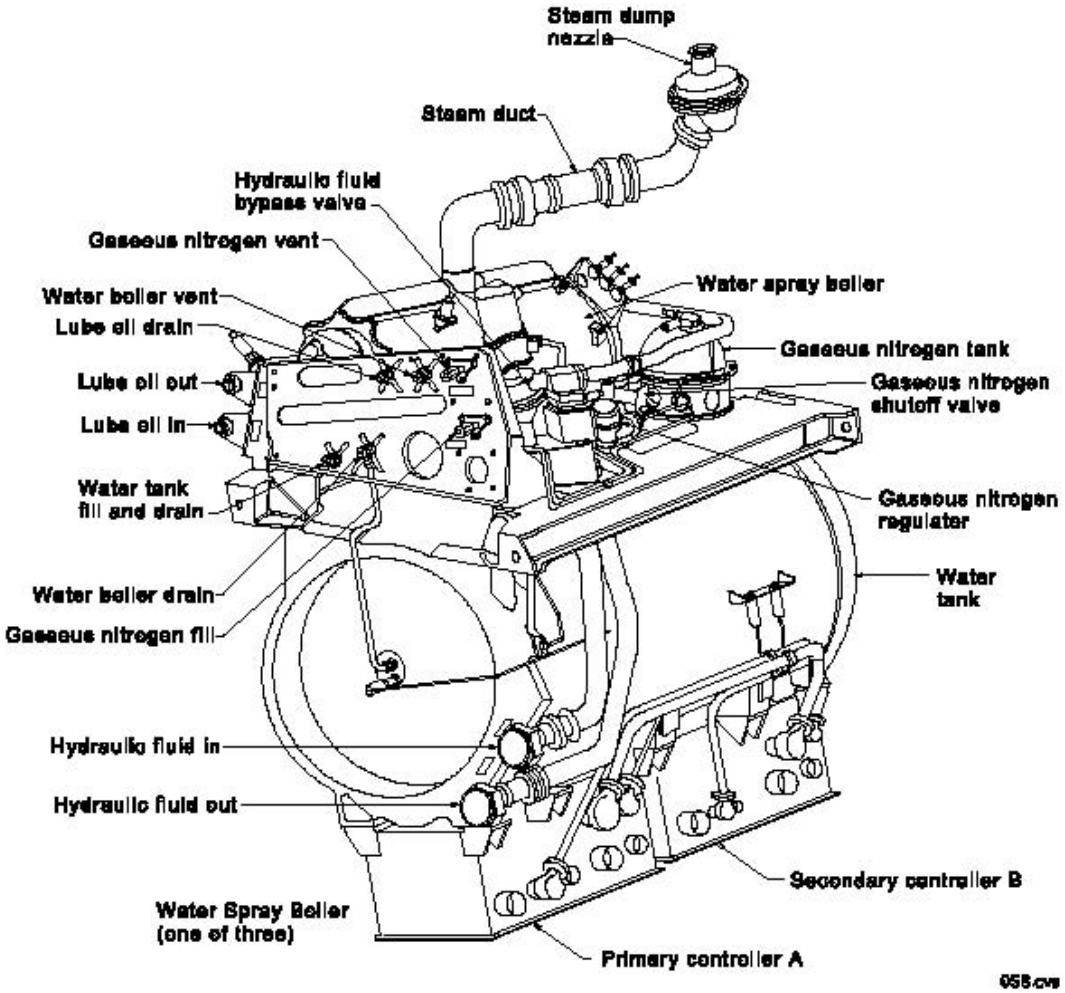

Figure B-111. Diagram of a water spray boiler.
Source: USA. *APU/Hydraulic/Water Spray Boiler Systems Training Manual*, 1-2.

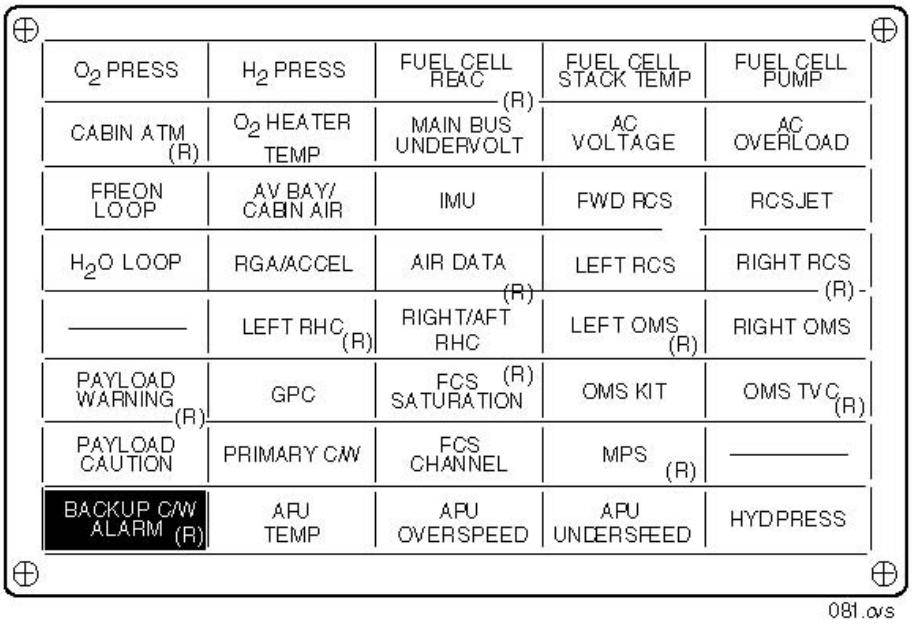

Caution and Warning Annunciator Matrix on Panel F7

The 39 lights shown are dedicated to the primary C/W System. The BACKUP C/W ALARM light is dedicated to the entire backup C/W system. (R) signifies a red warning light.

Figure B-112. Diagram of the CWS forty-light array, flight deck.
Source: USA, *Shuttle Crew Operation Manual*, 2.2-3.

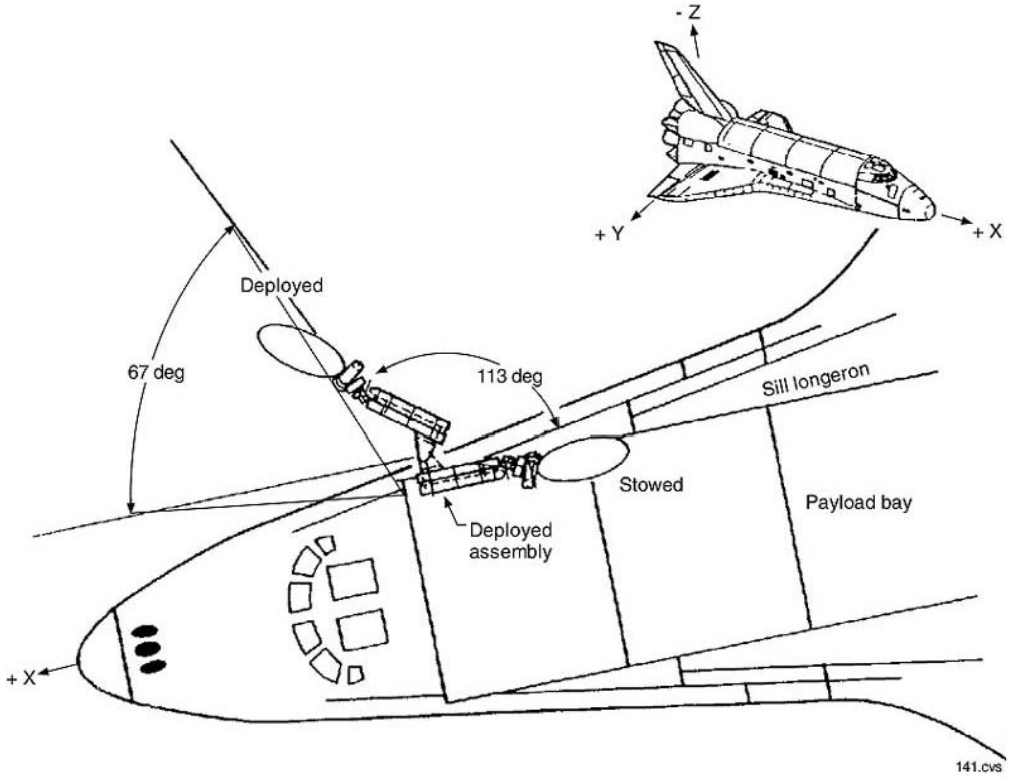

Figure B-113. Diagram of the Ku-band antenna location.
Source: USA, *Shuttle Crew Operation Manual*, 2.4-14.

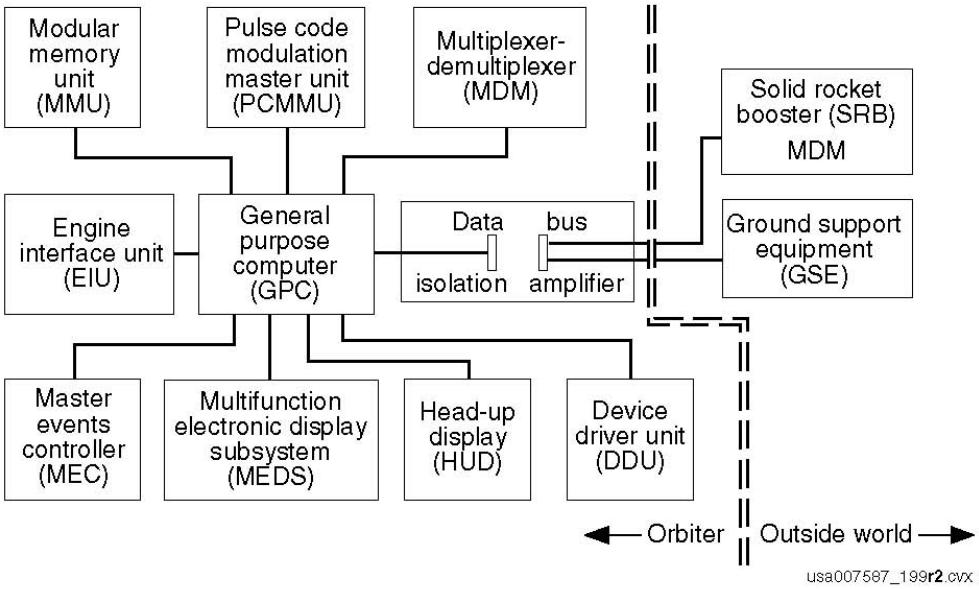

Figure B-114. Diagram of the DPS interfacing hardware.
Source: USA, *Shuttle Crew Operation Manual*, 2.6-1.

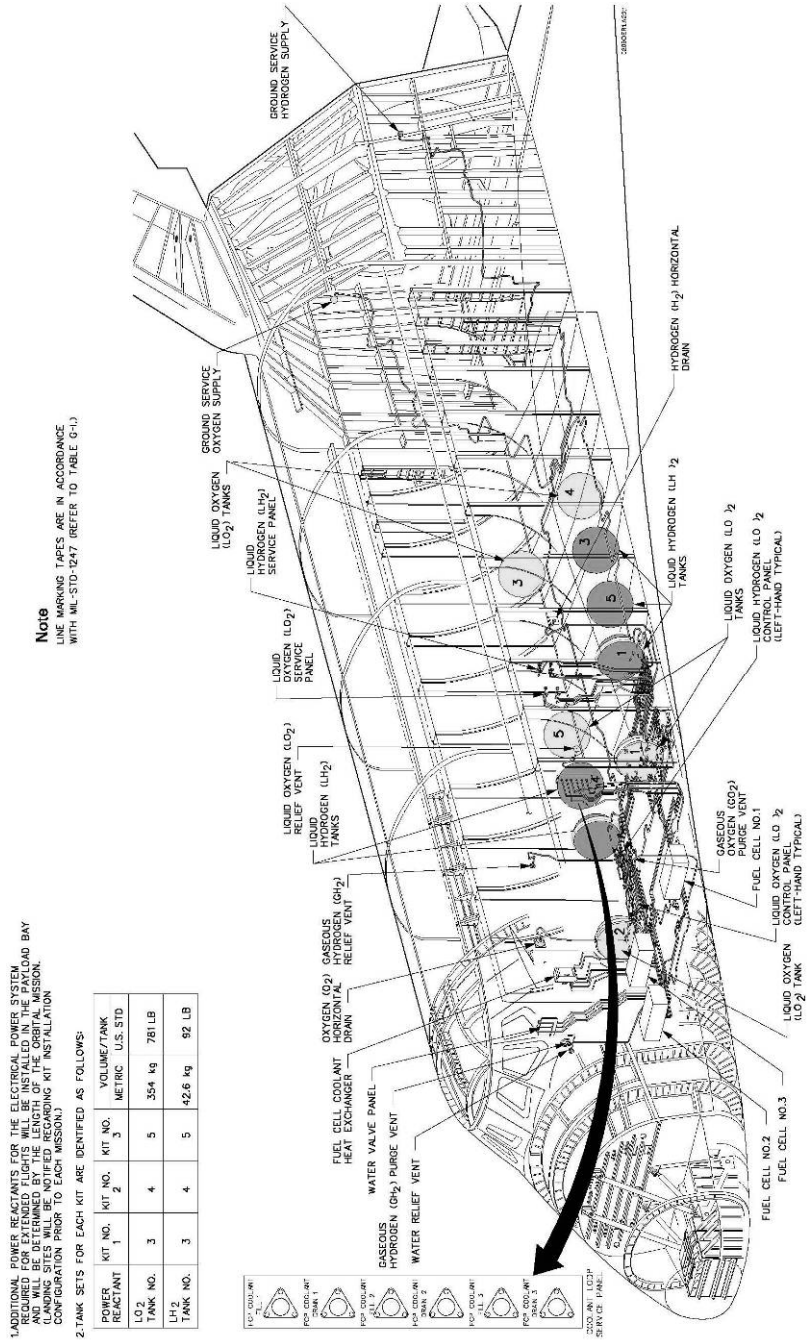

Figure B-115. Diagram of the electrical power system.
Source: NASA, *Shuttle Operational Data Book*, Volume 4, part 1, Figure 2-9.

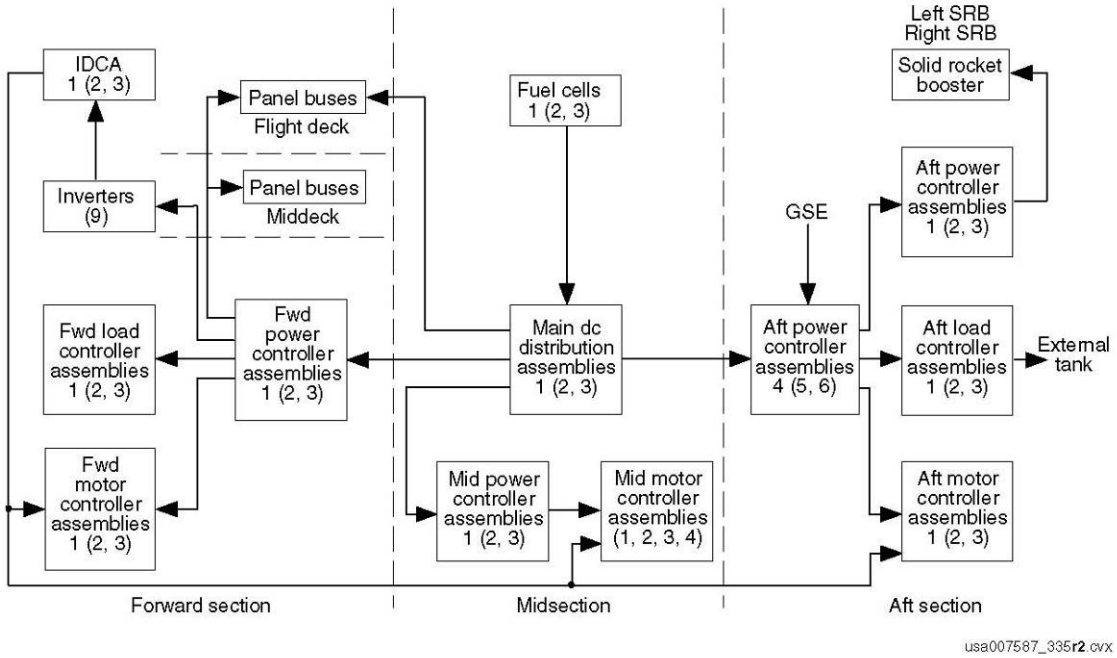

Figure B-116. Block diagram of the EPS power distribution system.
Source: USA, *Shuttle Crew Operation Manual*, 2.8-22.

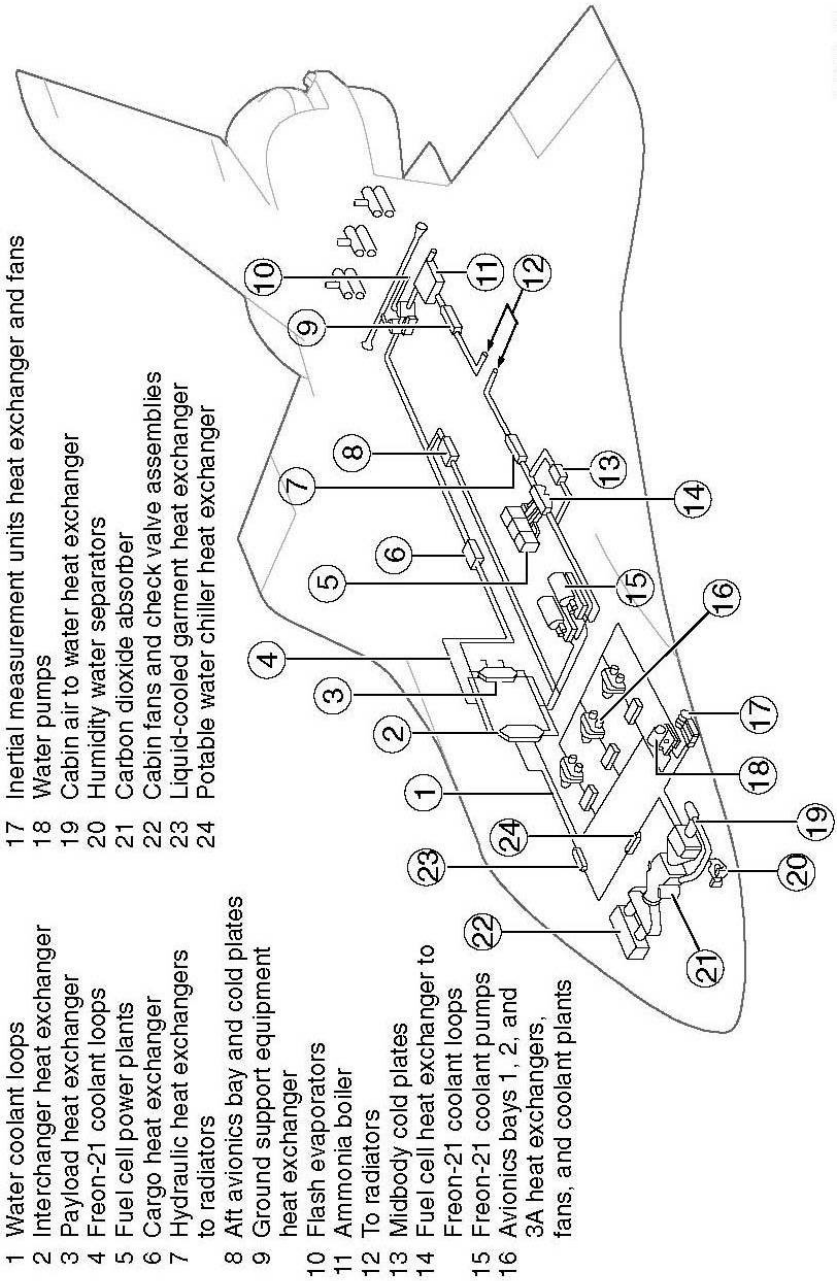

Figure B-117. Diagram of the ECLSS.
Source: USA, *Shuttle Crew Operation Manual*, 2.9-1.

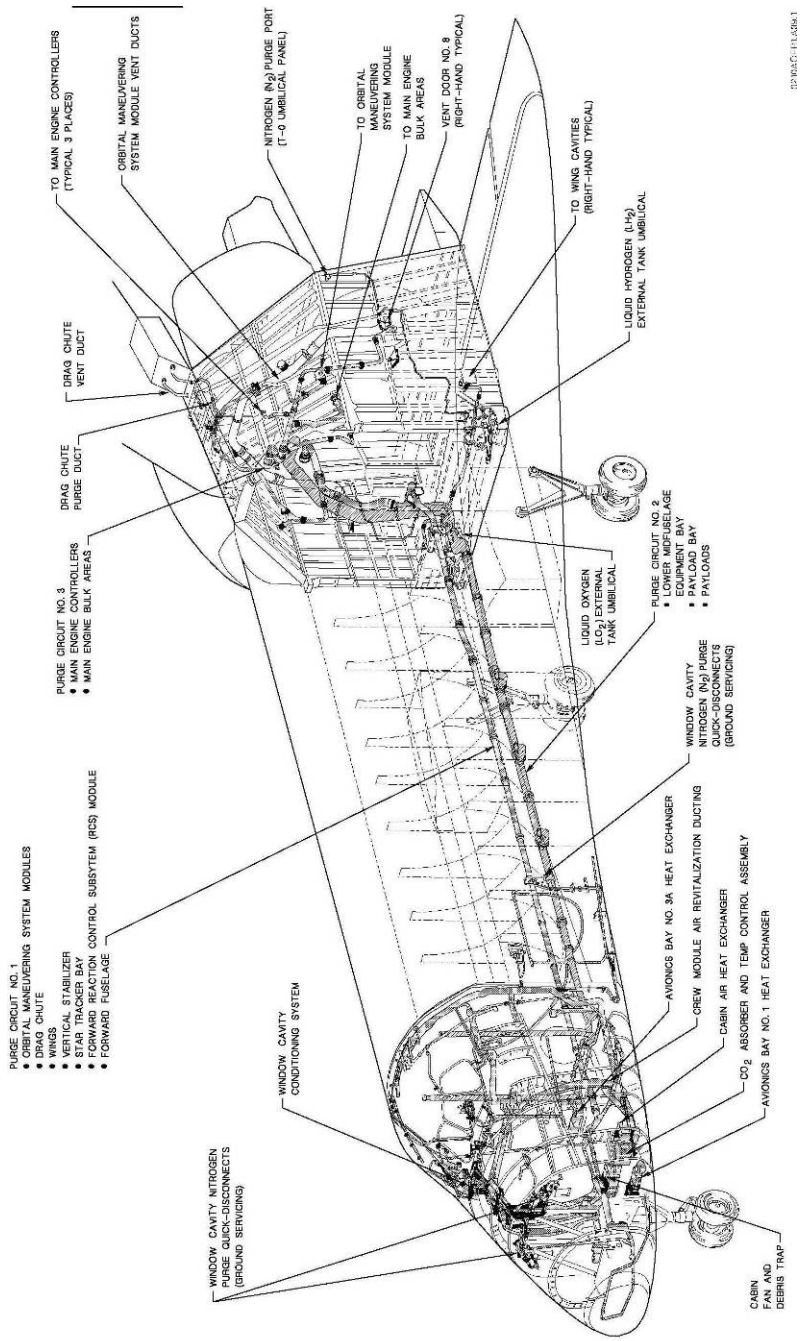

Figure B-118. Diagram of the ECLSS, purge, conditioning, air revitalization ducting.
Source: NASA, *Shuttle Operational Data Book*, Volume 4, part 1, Figure 2-10a.

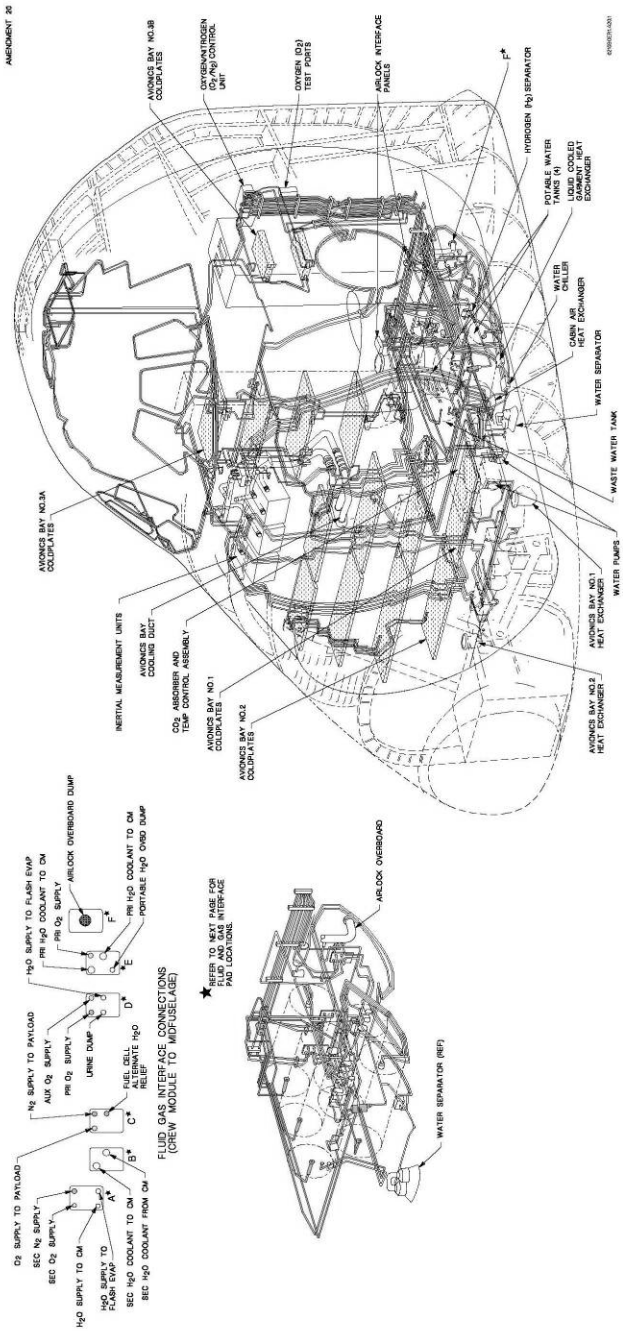

Figure B-119. Diagram of the ECLSS, forward fuselage, coolant and air revitalization components.
Source: NASA, *Shuttle Operational Data Book*, Volume 4, part 1, Figure 2-10b.

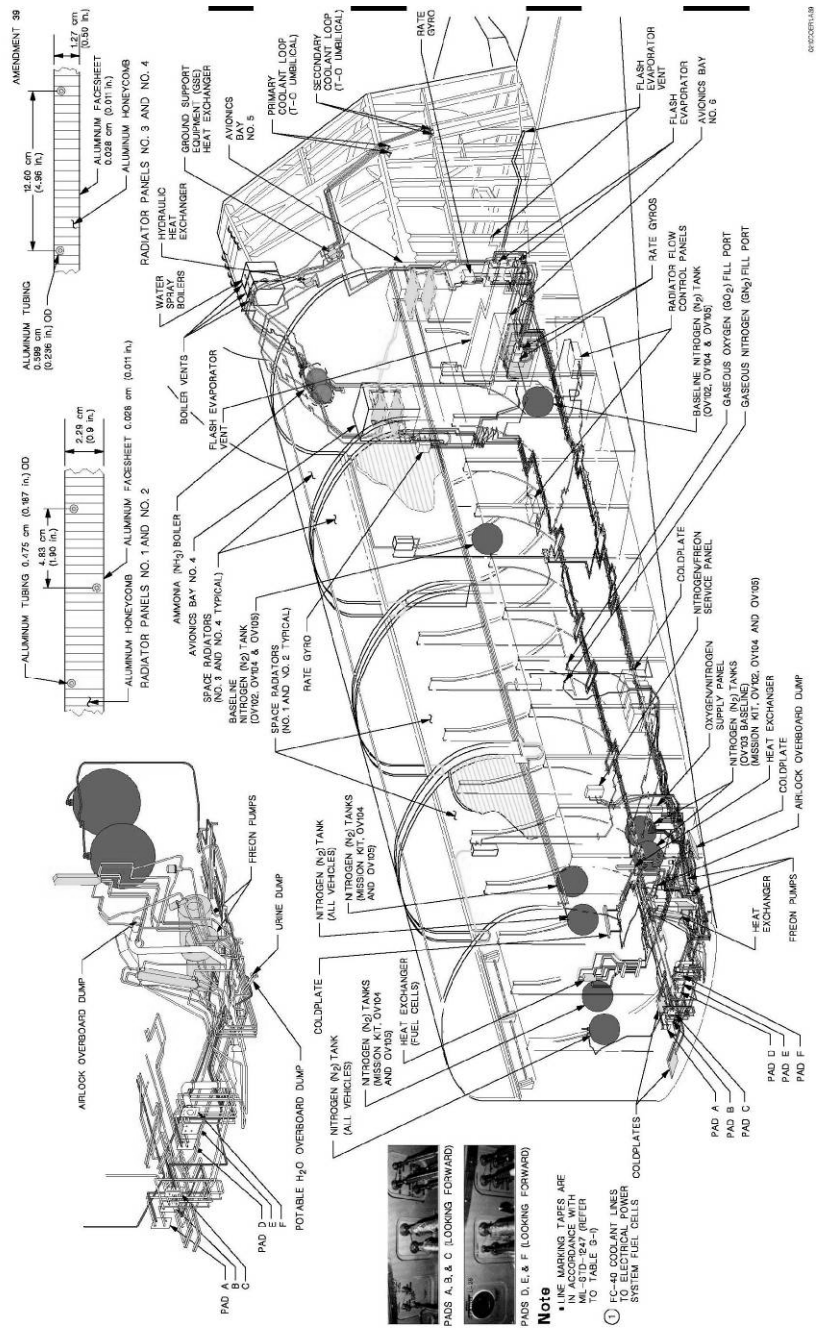

Figure B-120. Diagram of the ECLSS, mid- and aft fuselage coolant system.
Source: NASA, *Shuttle Operational Data Book*, Volume 4, part 1, Figure 2-10c.

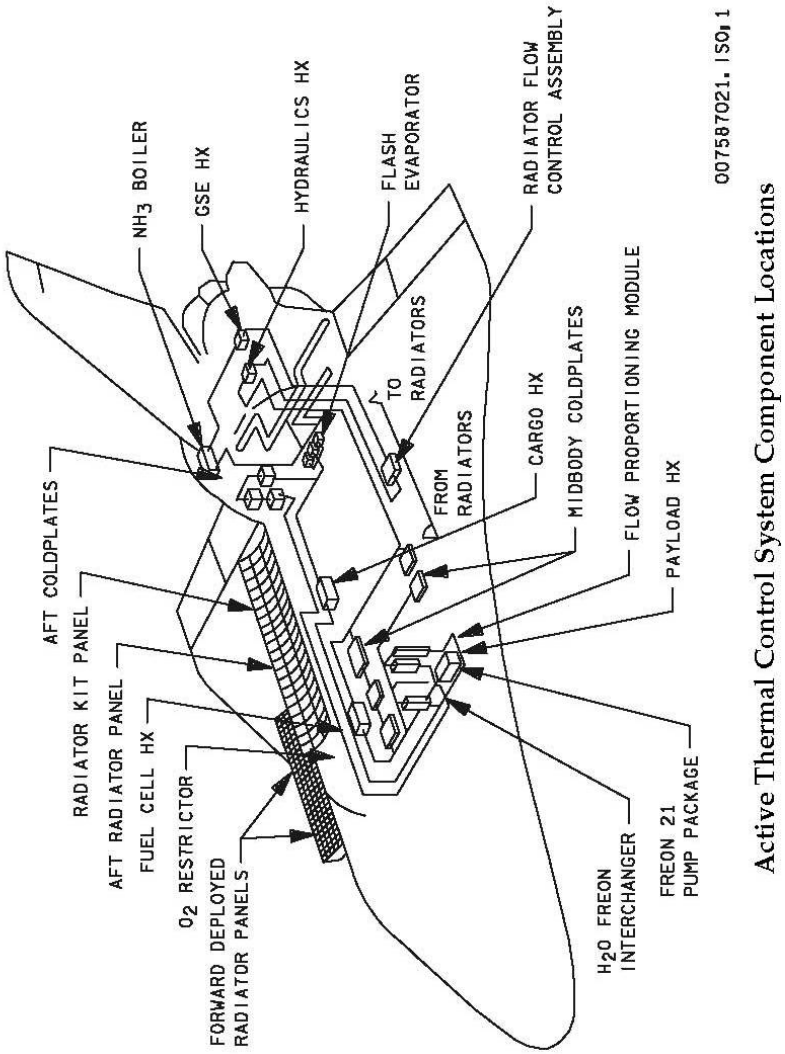

Figure B-121. Diagram of the ECLSS, active thermal control system.
Source: USA, *Shuttle Crew Operation Manual*, 2.9-23.

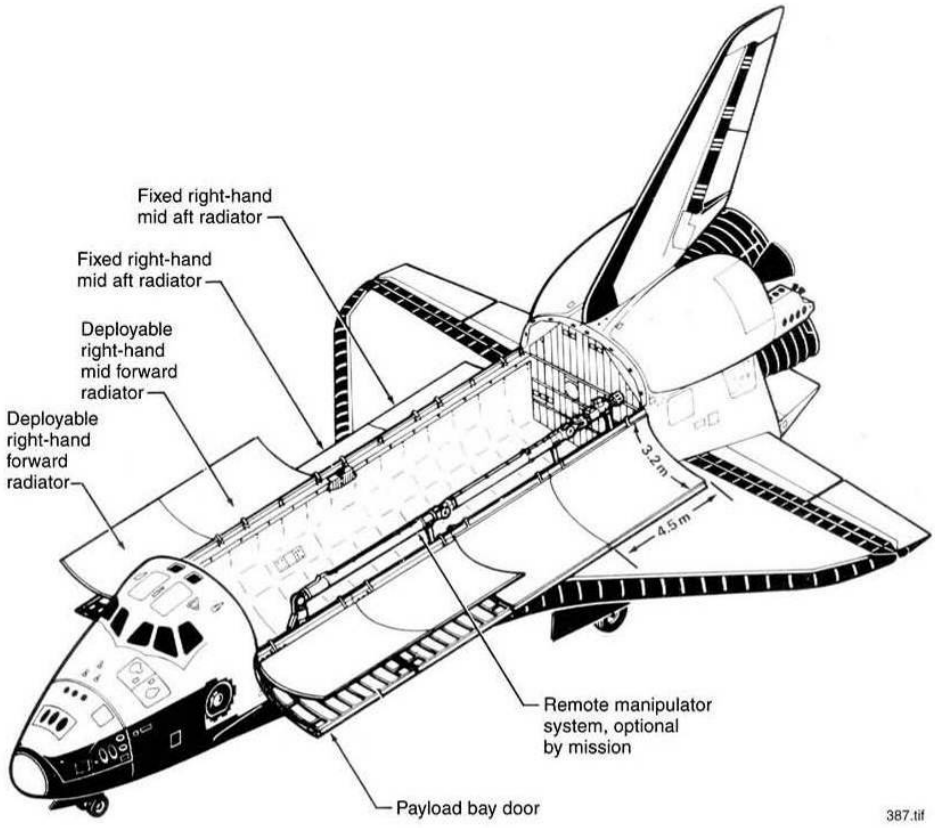

Figure B-122. Diagram of the ECLSS, active thermal control system radiators.
Source: USA, *Shuttle Crew Operation Manual*, 2.9-27.

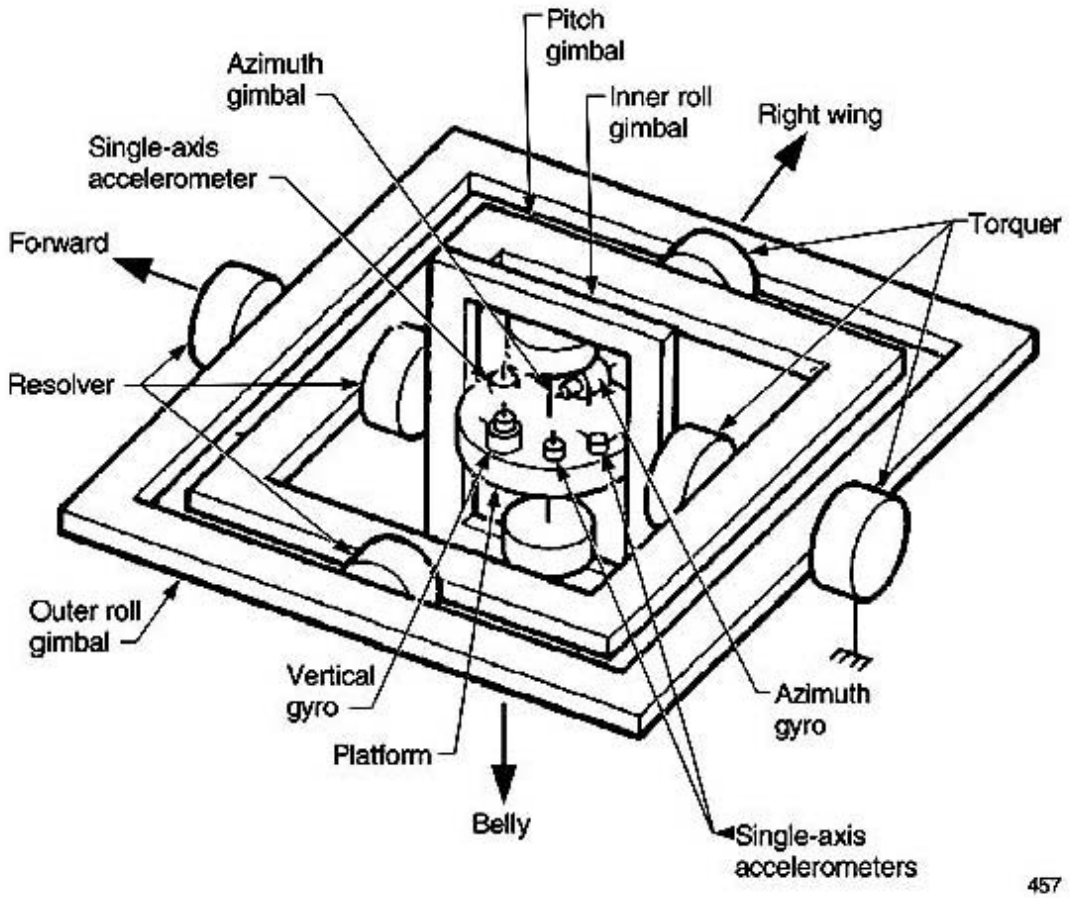

Figure B-123. Diagram of an inertial measurement unit.
Source: USA, *Shuttle Crew Operation Manual*, 2.13-7.

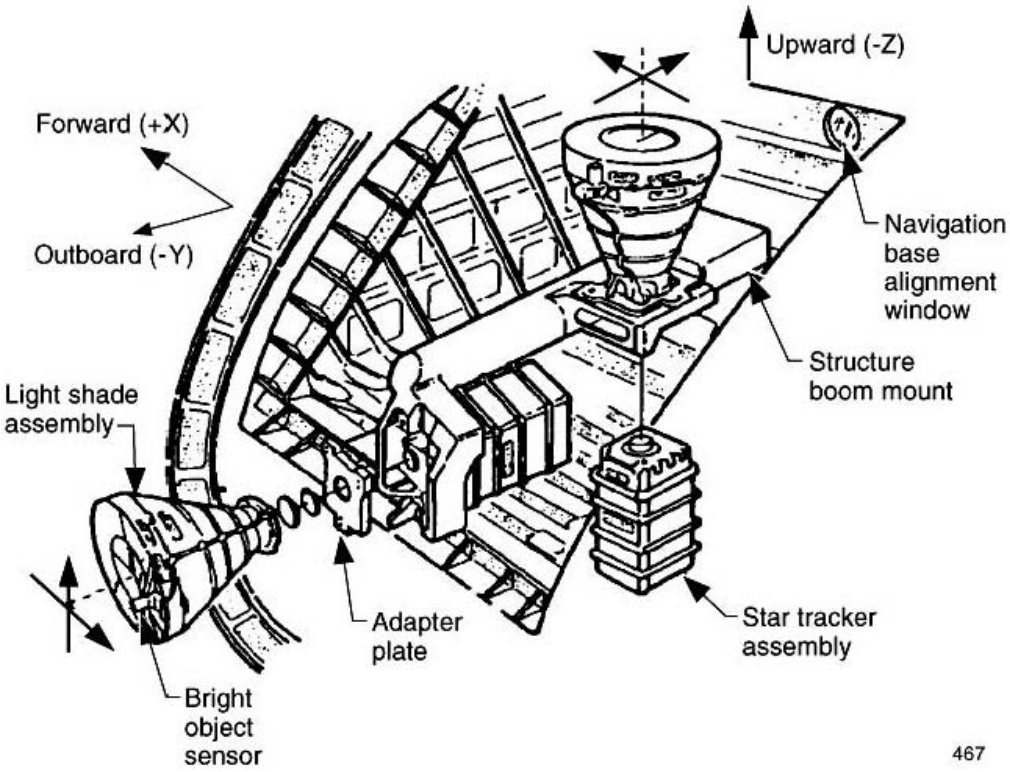

Figure B-124. Diagram of the star trackers.
Source: USA, *Shuttle Crew Operation Manual*, 2.13-14.

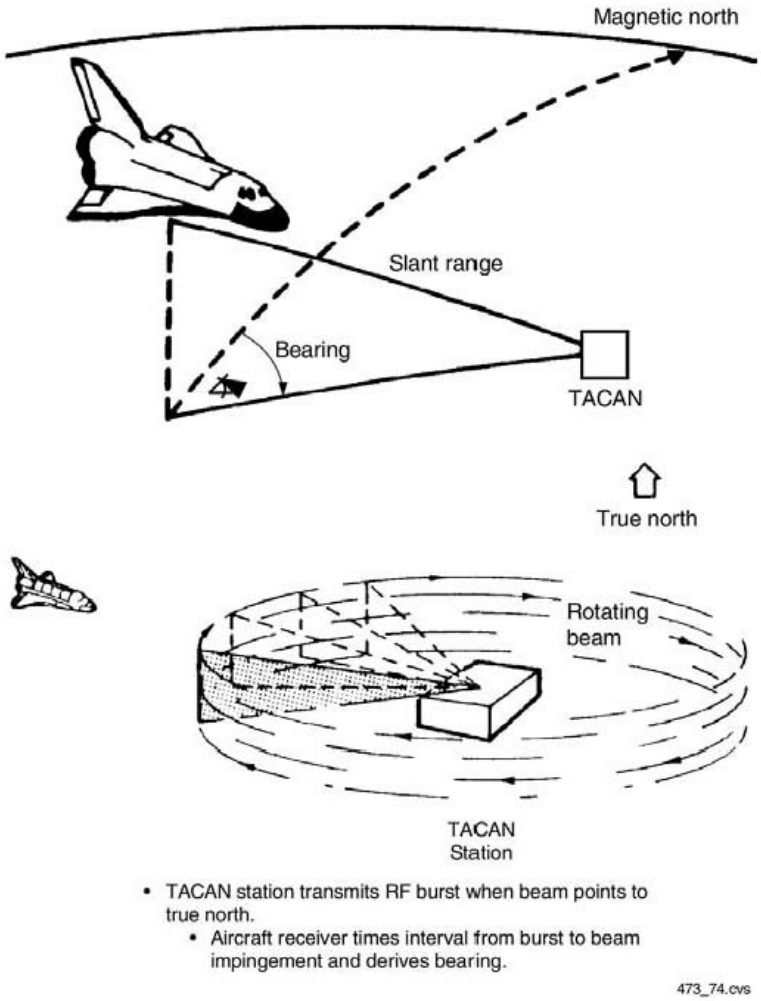

Figure B-125. Diagram of the TACAN system.
Source: USA, *Shuttle Crew Operation Manual*, 2.13-16.

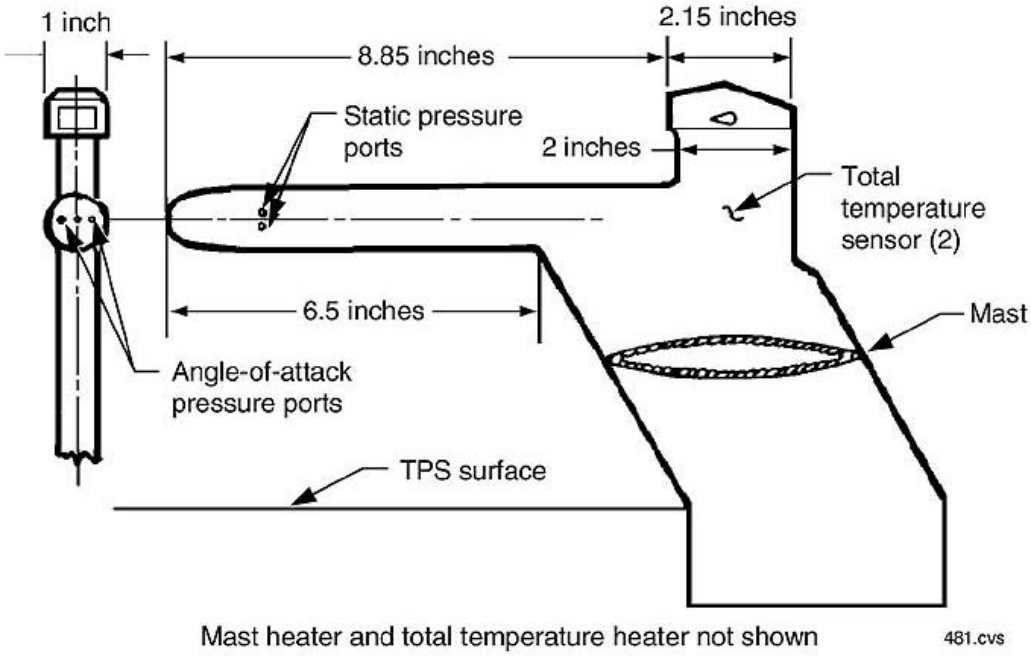

Figure B-126. Diagram of an air data probe.
Source: USA, *Shuttle Crew Operation Manual*, 2.13-23.

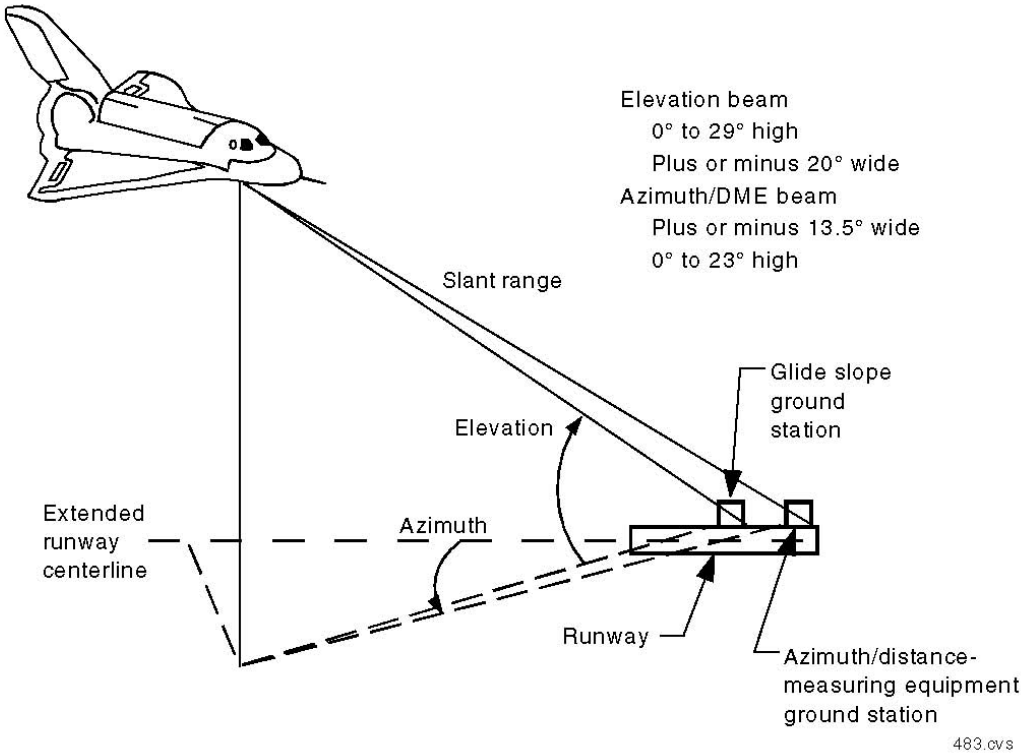

Figure B-127. Diagram of the microwave landing system.
Source: USA, *Shuttle Crew Operation Manual*, 2.13-25.

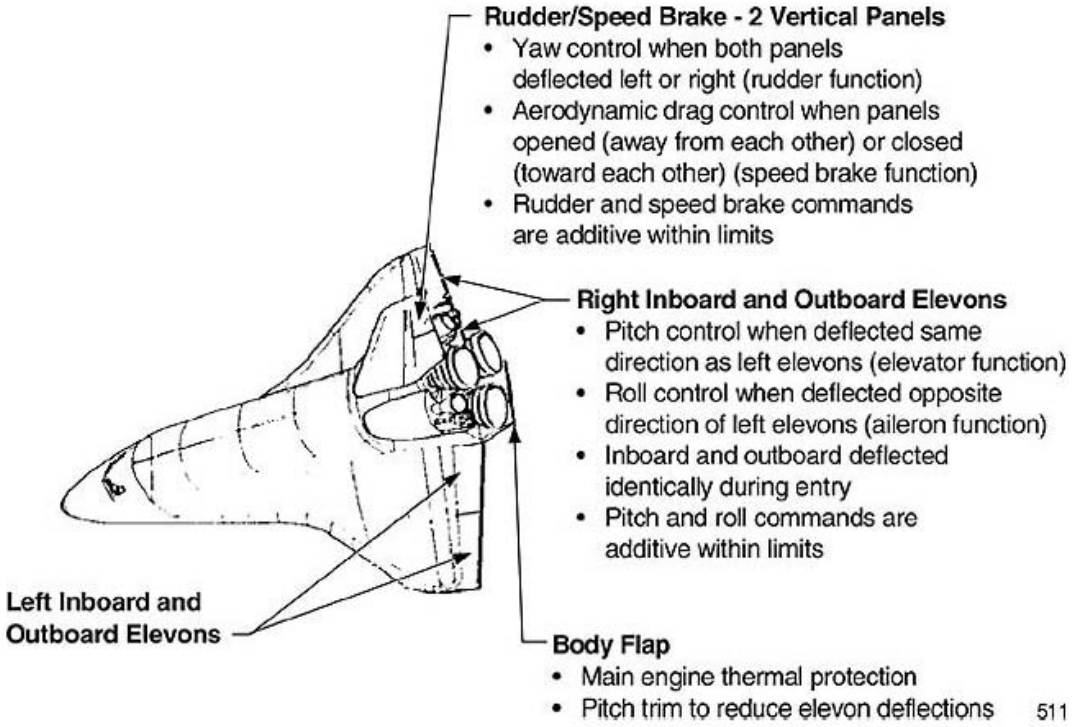

Figure B-128. Diagram of aerodynamic surfaces.
Source: USA, *Shuttle Crew Operation Manual*, 2.13-42.

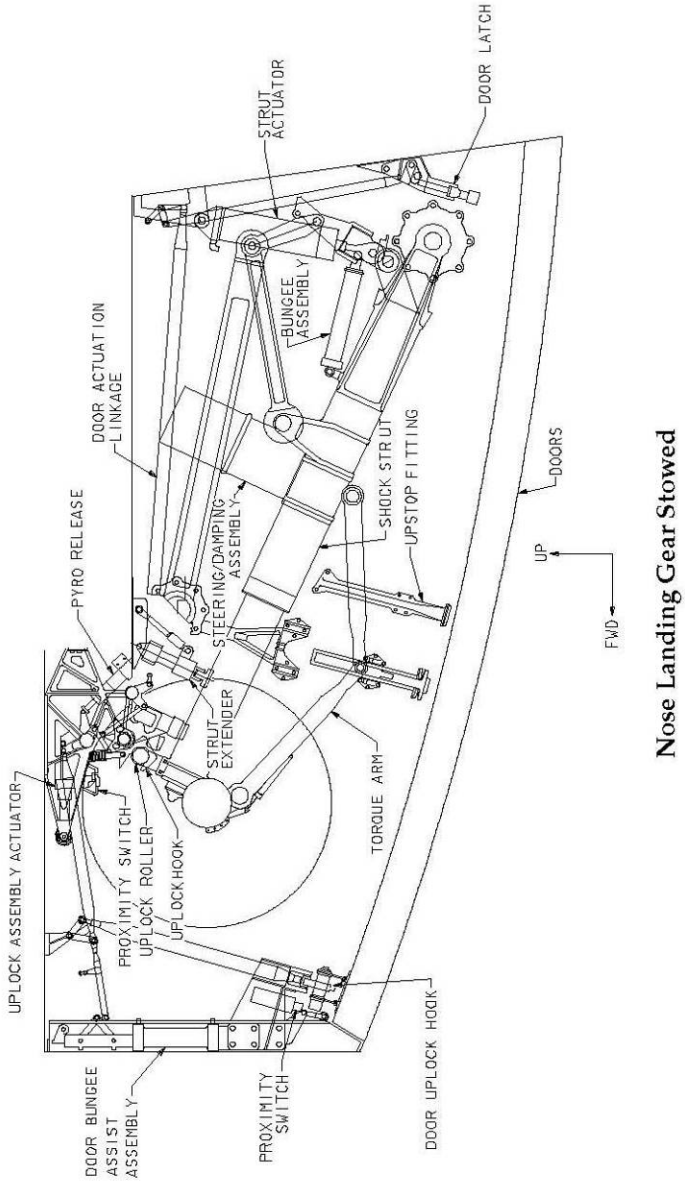

Figure B-129. Illustration showing the Nose Landing Gear in its stowed position.
Source: USA. *Shuttle Crew Operations Manual*, 2.14-3.

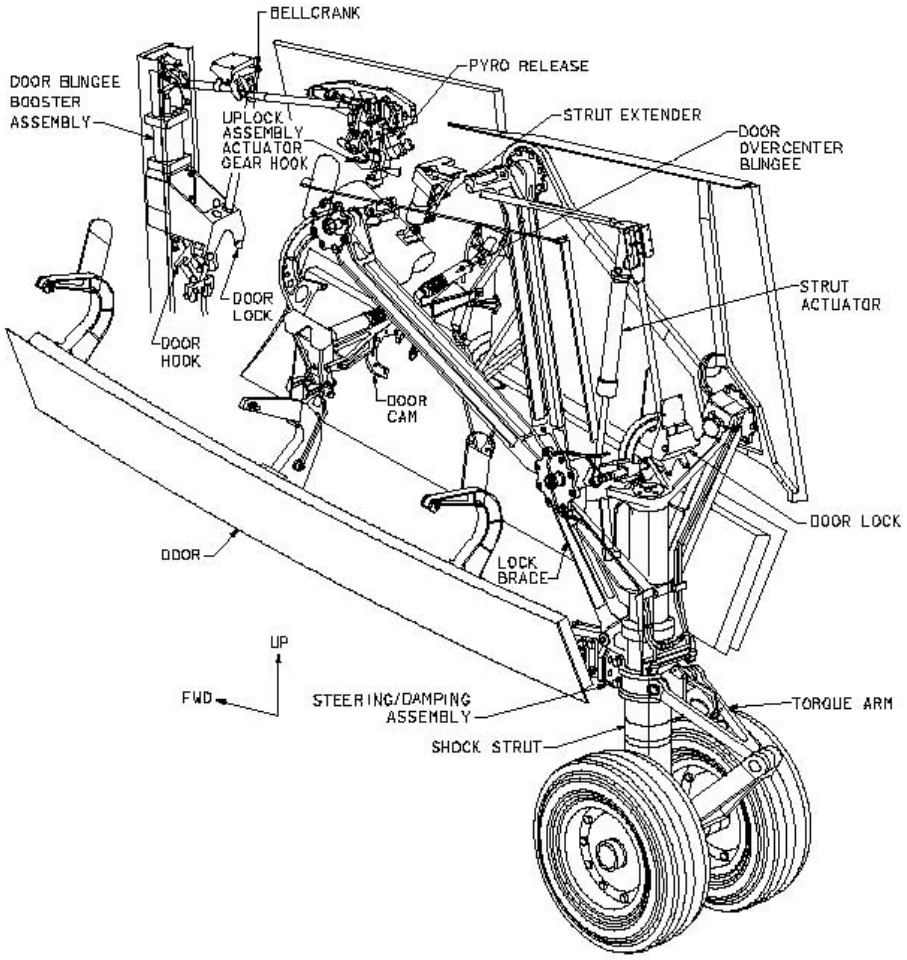

Nose Landing Gear Deployed

Figure B-130. Illustration showing the Nose Landing Gear in its deployed position.
Source: USA. *Shuttle Crew Operations Manual*, 2.14-2.

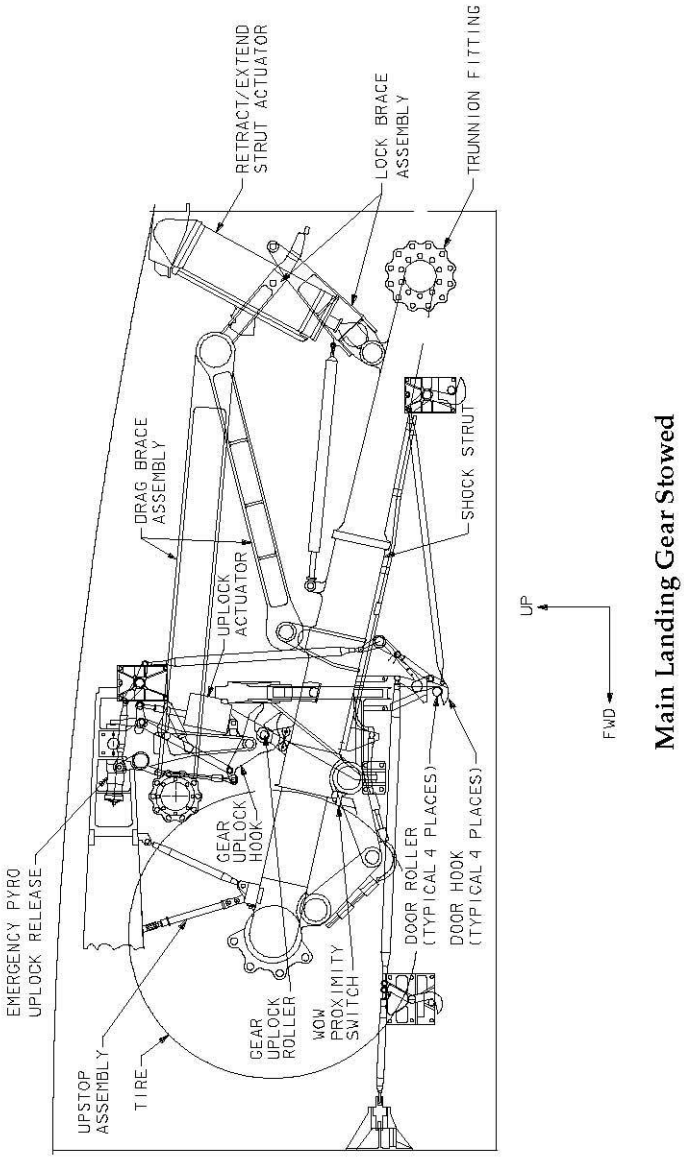

Figure B-131. Illustration showing the Main Landing Gear in its stowed position.
Source: USA. *Shuttle Crew Operations Manual*, 2.14-4.

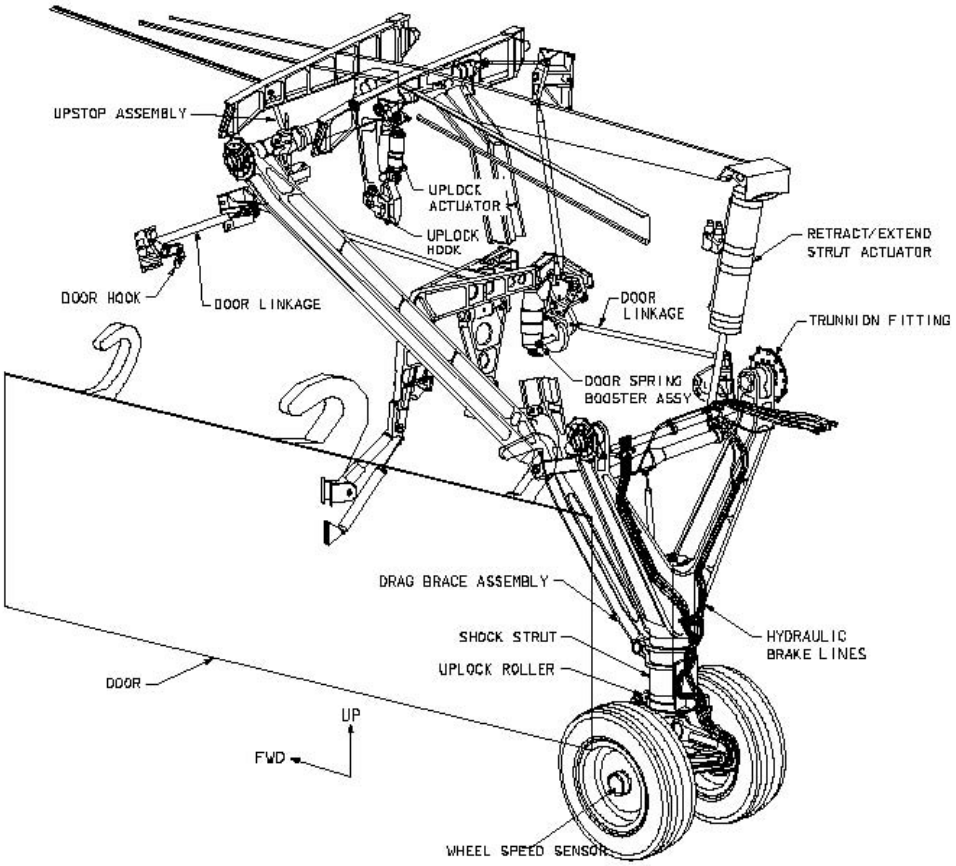

Figure B-132. Illustration showing the Main Landing Gear in its deployed position.
Source: USA. *Shuttle Crew Operations Manual*, 2.14-2.

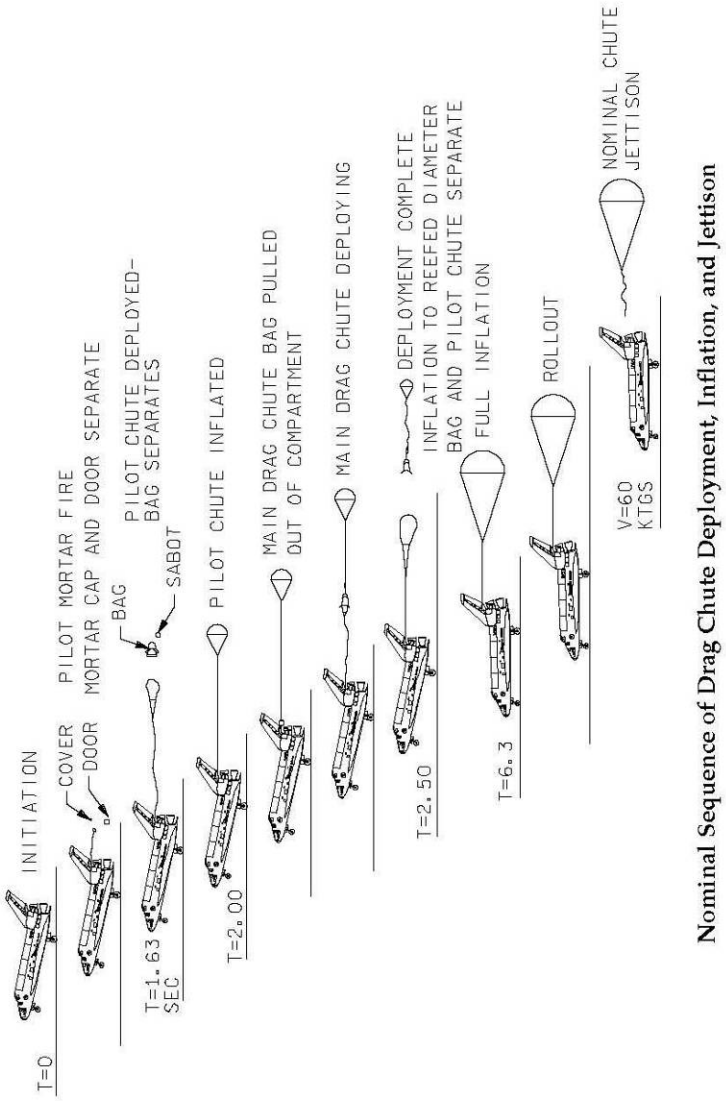

Figure B-133. Illustration showing the deployment of the Drag Chute.
Source: USA. *Shuttle Crew Operations Manual*, 2.14-5.

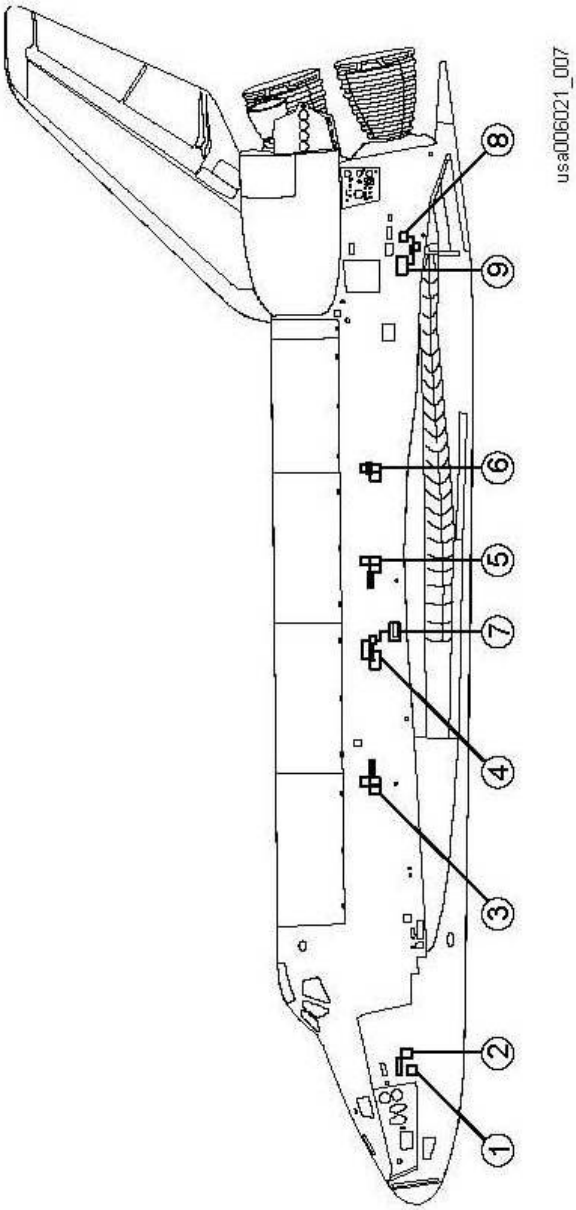

Figure B-134. Diagram of the active vent system.
Source: USA. *Mechanical Systems Training Manual*, 2-3.

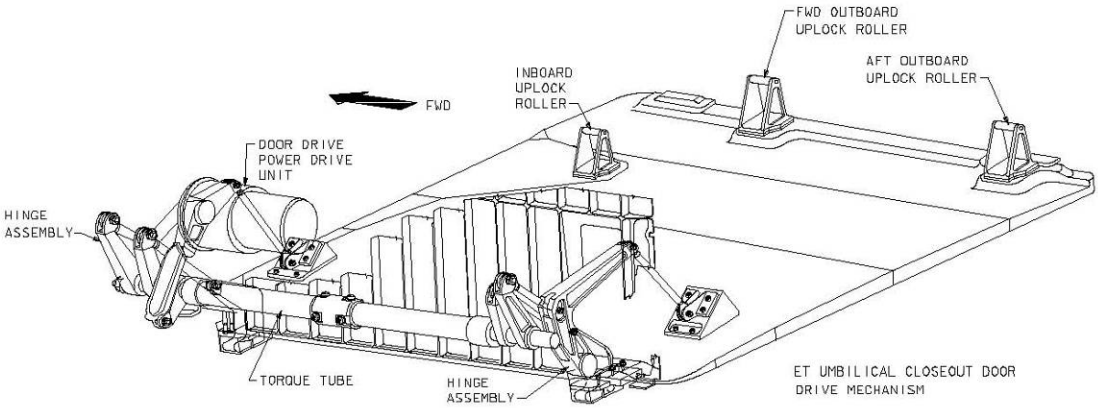

Right Side ET Umbilical Door

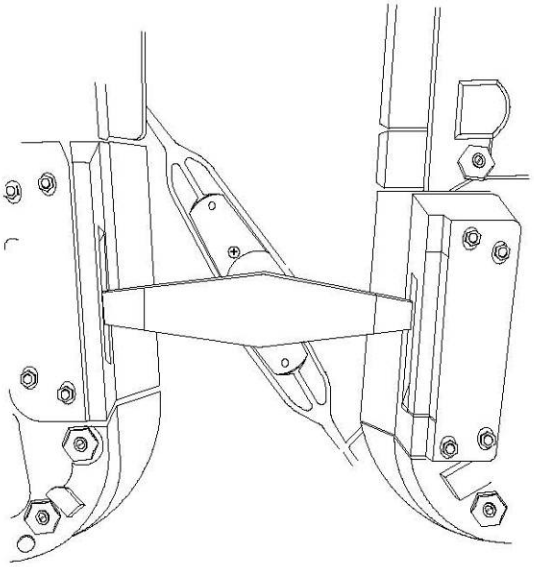

Centerline Latch Movement

Figure B-135. Diagram of the ET umbilical door.
Source: USA. *Shuttle Crew Operations Manual*, 2.17-6.

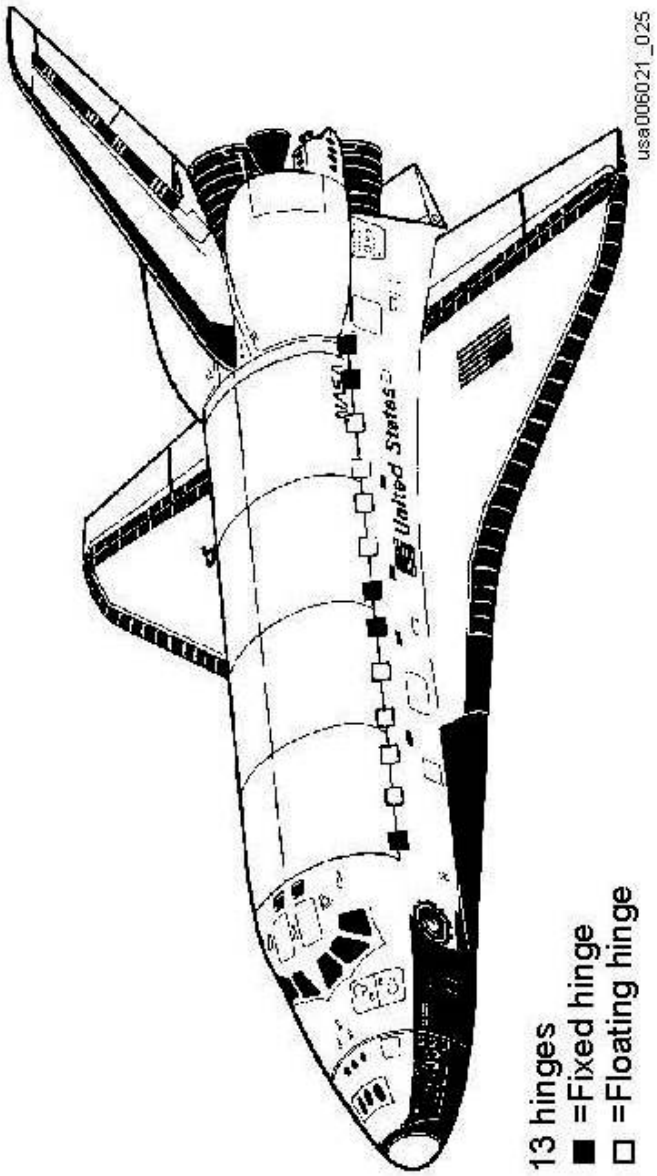

Figure B-136. Diagram showing the payload bay door hinges.
Source: USA. *Mechanical Systems Training Manual*, 4-2.

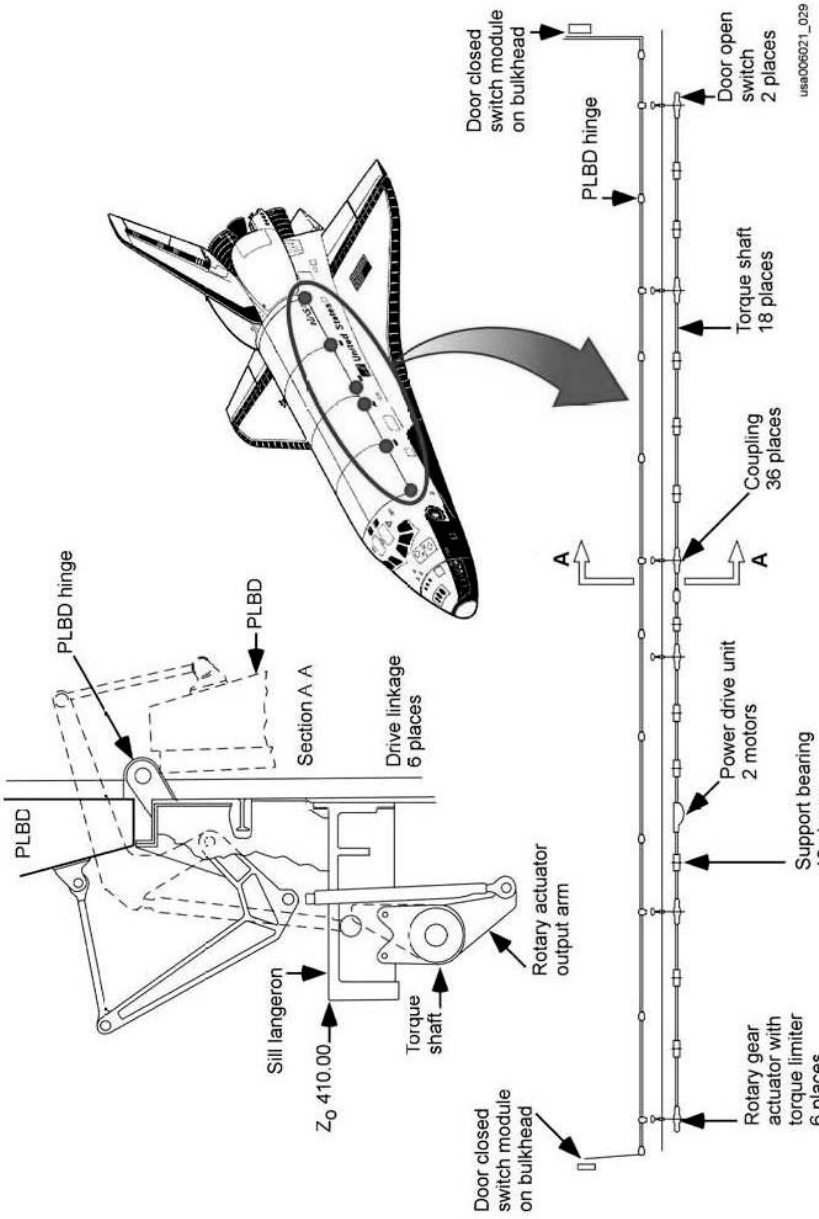

Figure B-137. Diagram showing the payload bay door drive system.
Source: USA. *Mechanical Systems Training Manual*, 4-5.

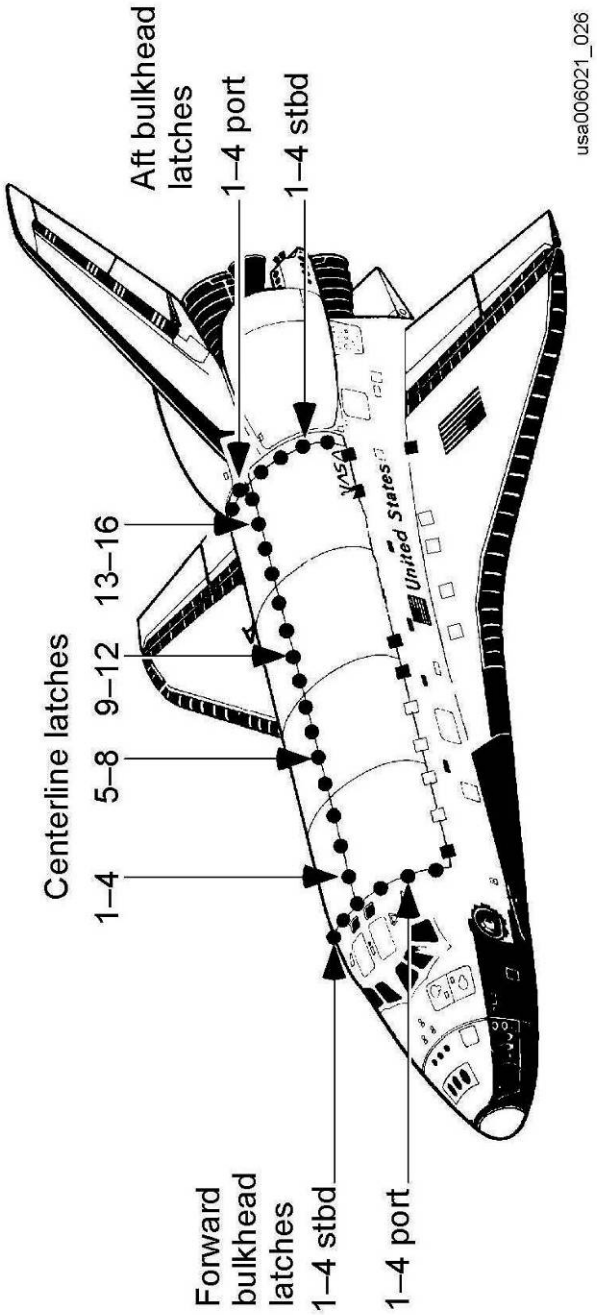

Figure B-138. Diagram showing the payload bay door latches.
Source: USA. *Mechanical Systems Training Manual*, 4-3.

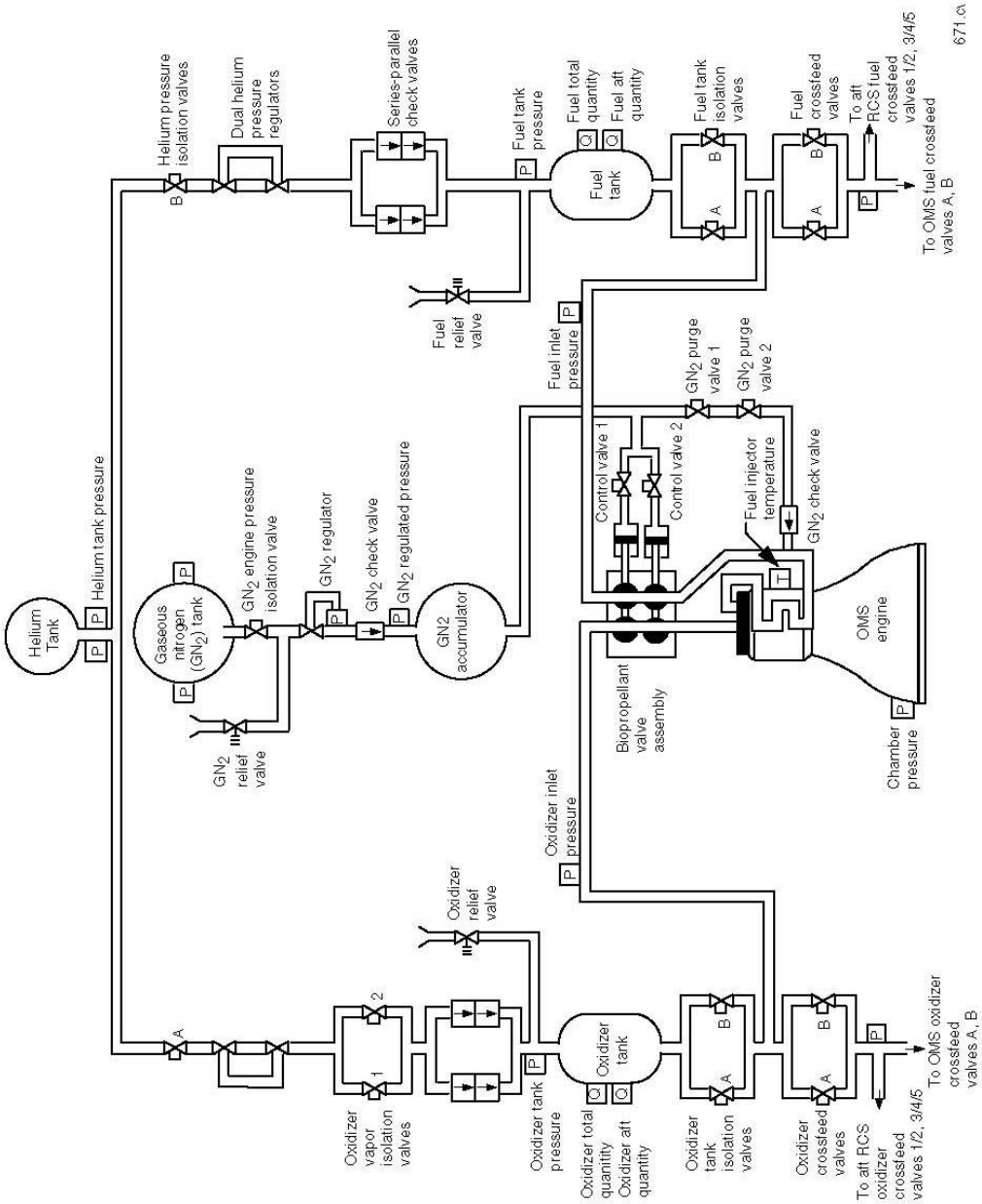

Figure B-139. Diagram of the pressurization and feed system for one OMS engine (the other is identical).
Source: USA. *Shuttle Crew Operations Manual*, 2.18-12.

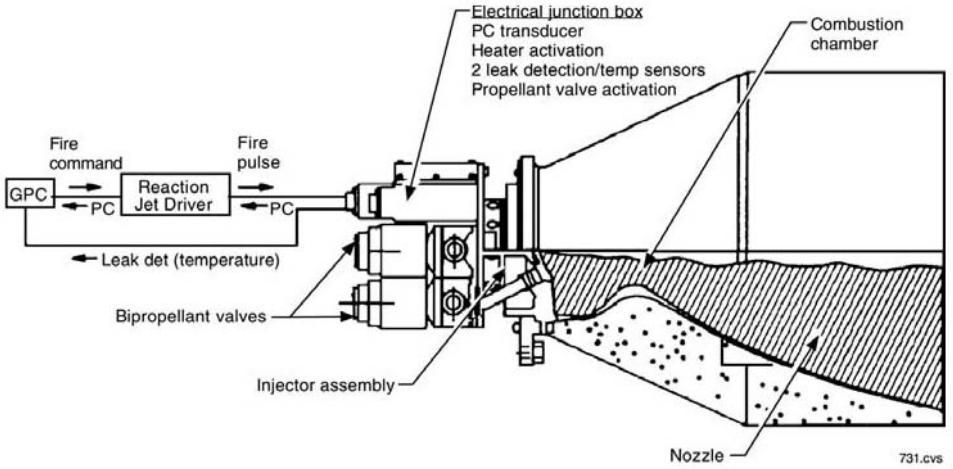

Primary Jet

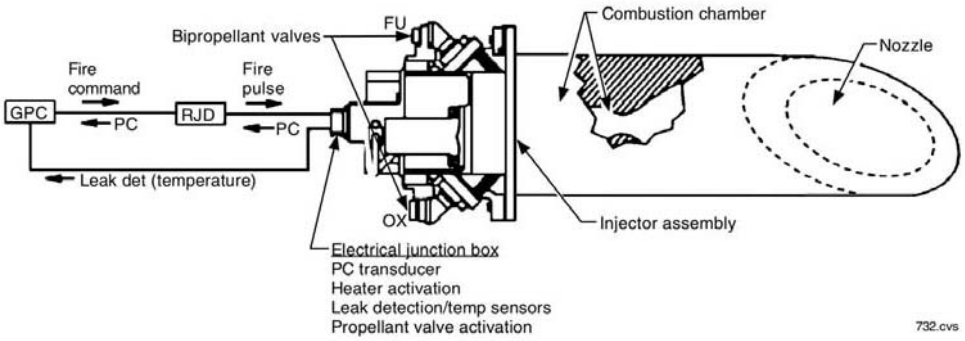

Vernier Jet

Figure B-140. Diagram of the RCS primary and vernier thrusters (also called jets).
Source: USA. *Shuttle Crew Operations Manual*, 2.22-4.

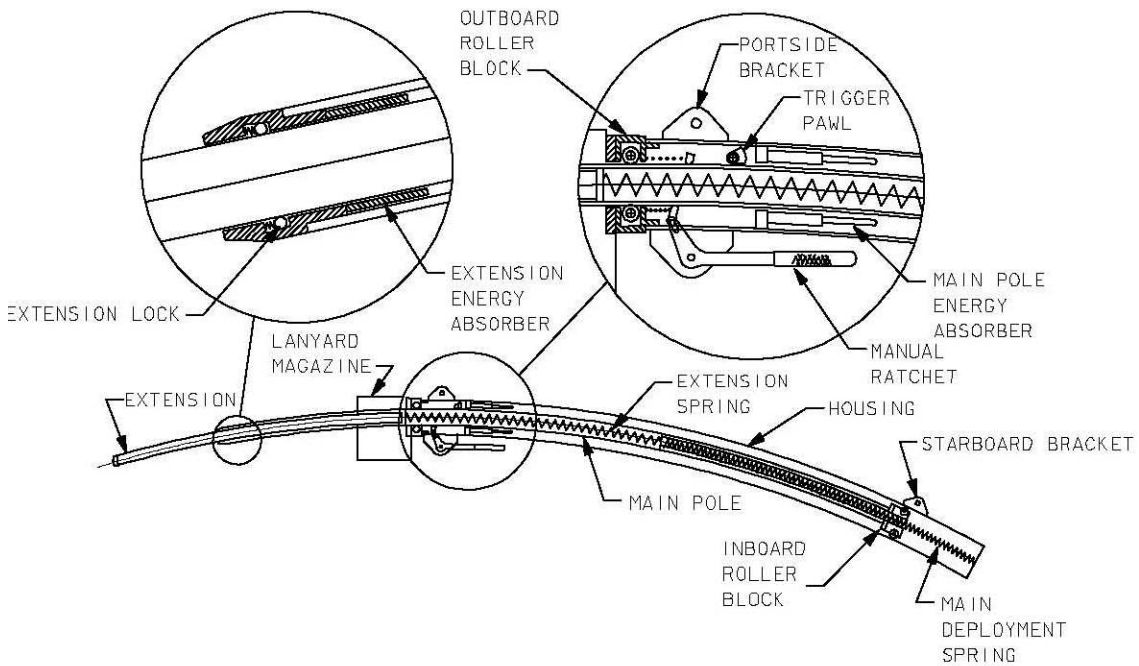

Figure B-141. Diagram of the crew escape pole.
Source: USA. *Shuttle Crew Operations Manual*, 2.10-15.

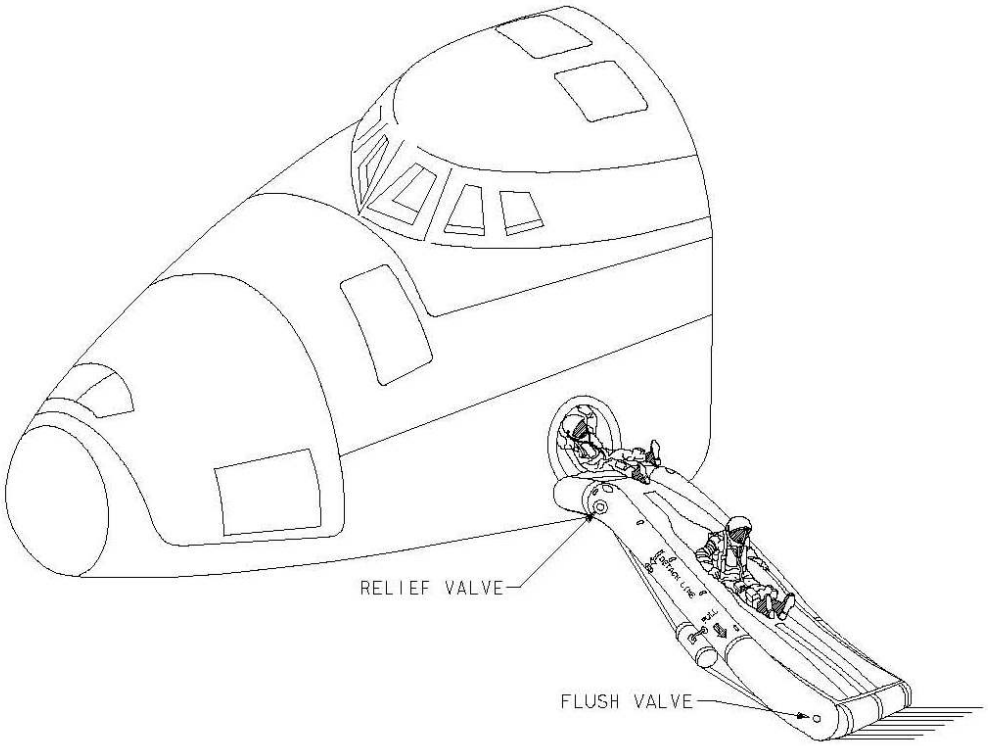

Figure B-142. Diagram of the emergency egress slide.
Source: USA. *Shuttle Crew Operations Manual*, 2.10-14.

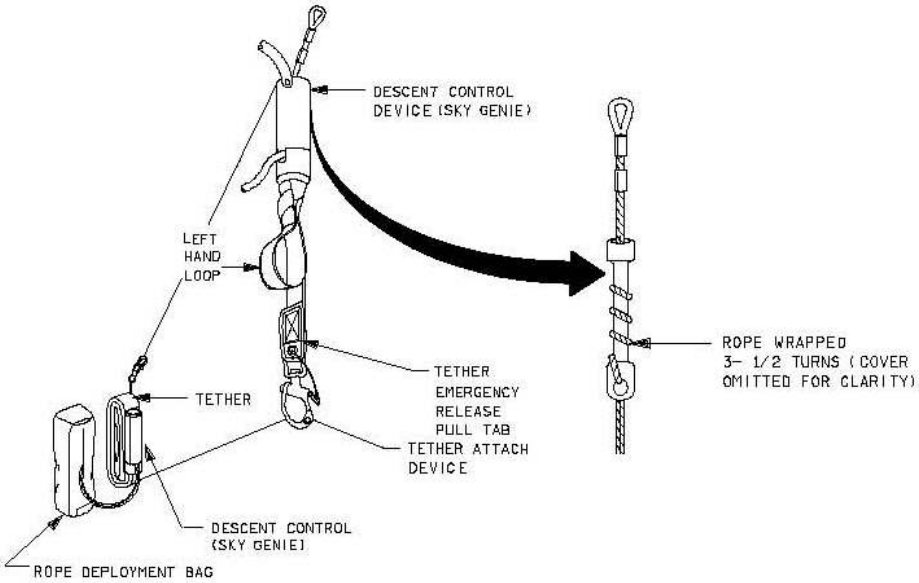

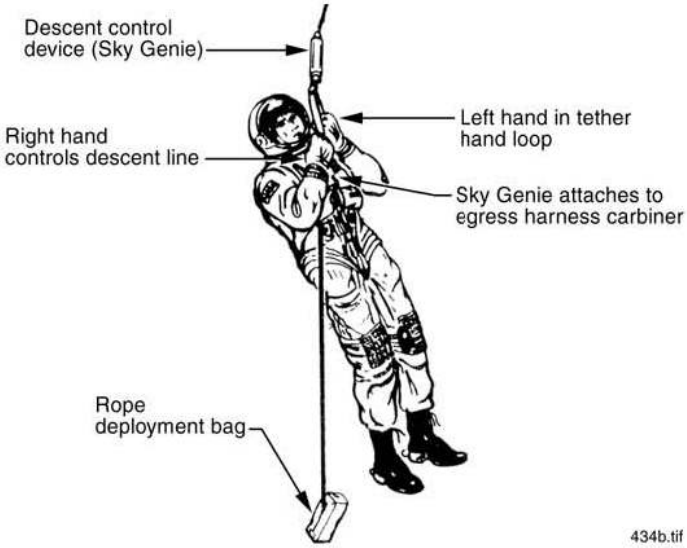

Figure B-143. Diagram of the Sky Genie.
Source: USA. *Shuttle Crew Operations Manual*, 2.10-17.

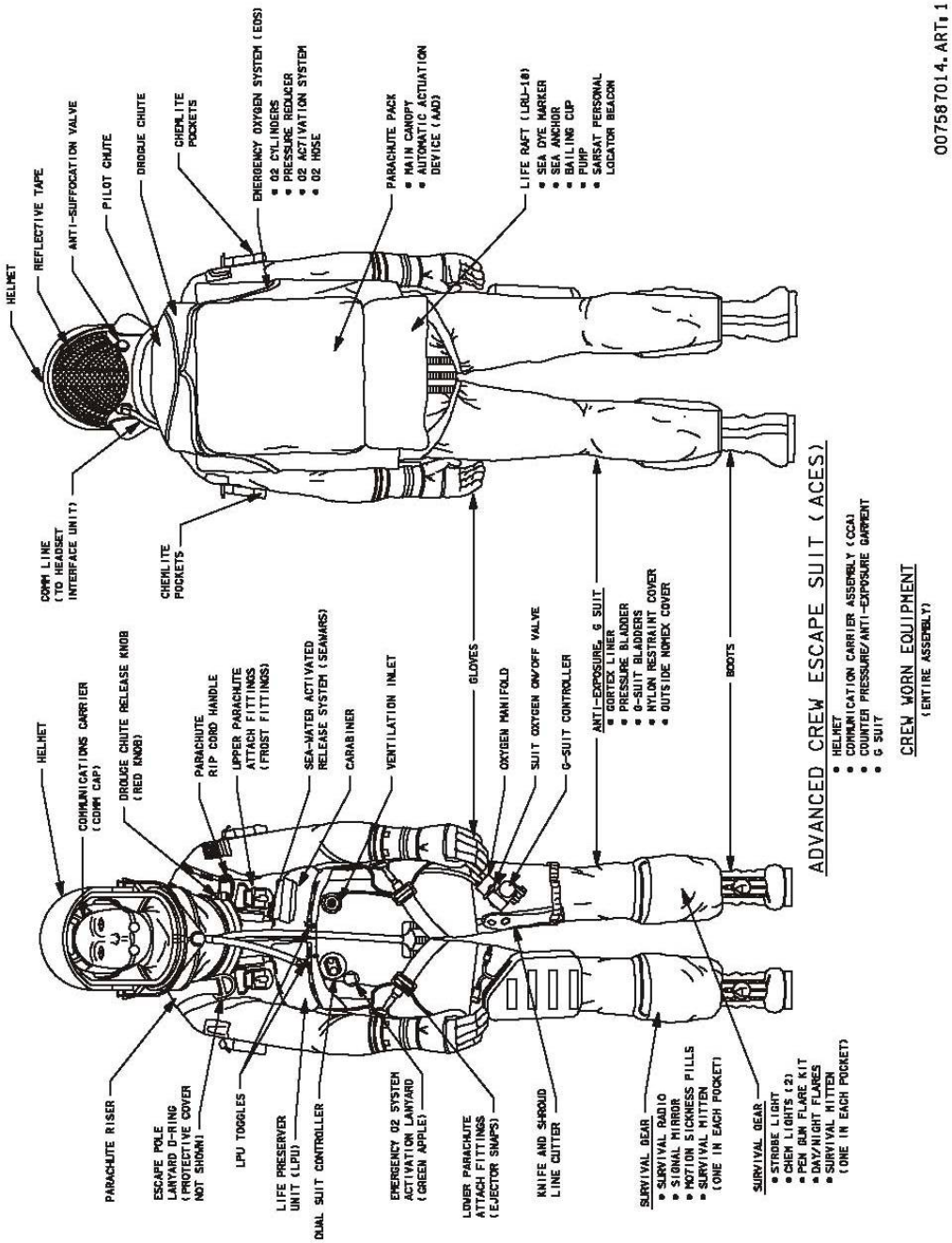

Figure B-144. Diagram of the advanced crew escape suit.
Source: USA. *Shuttle Crew Operations Manual*, 2.10-5.

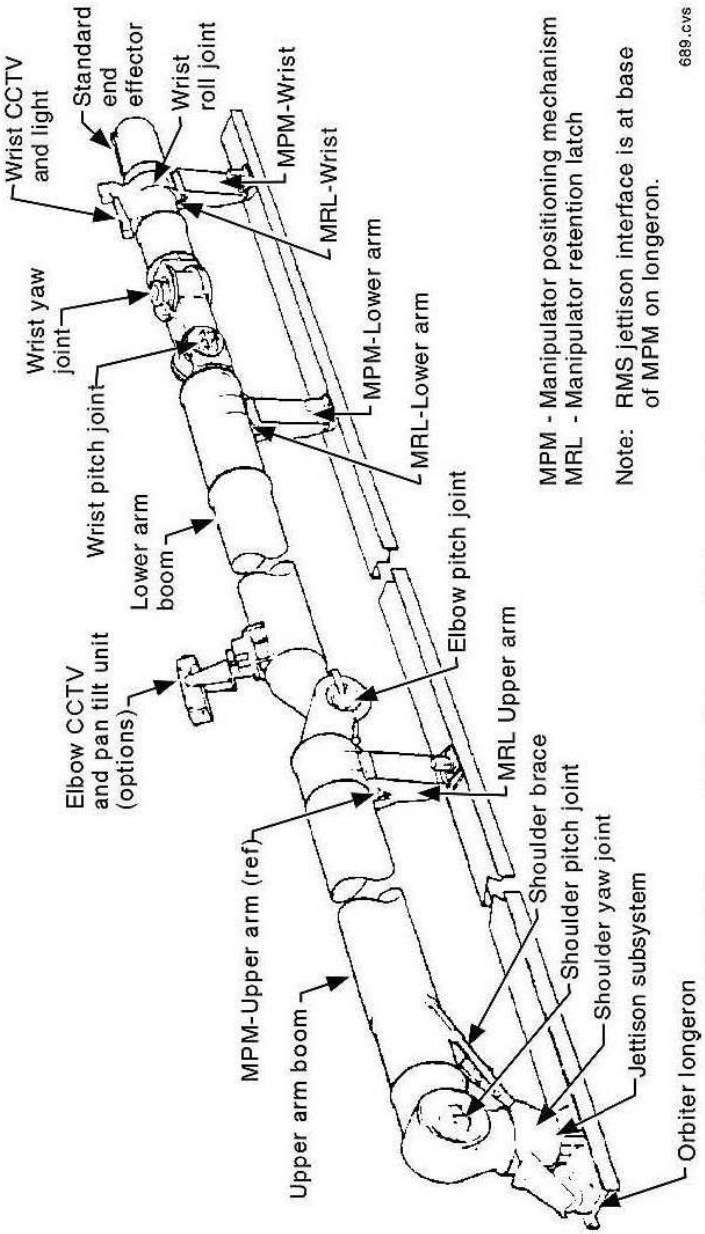

Figure B-145. Diagram of the RMS in its stowed position.
Source: USA. *Shuttle Crew Operations Manual*, 2.21-1.

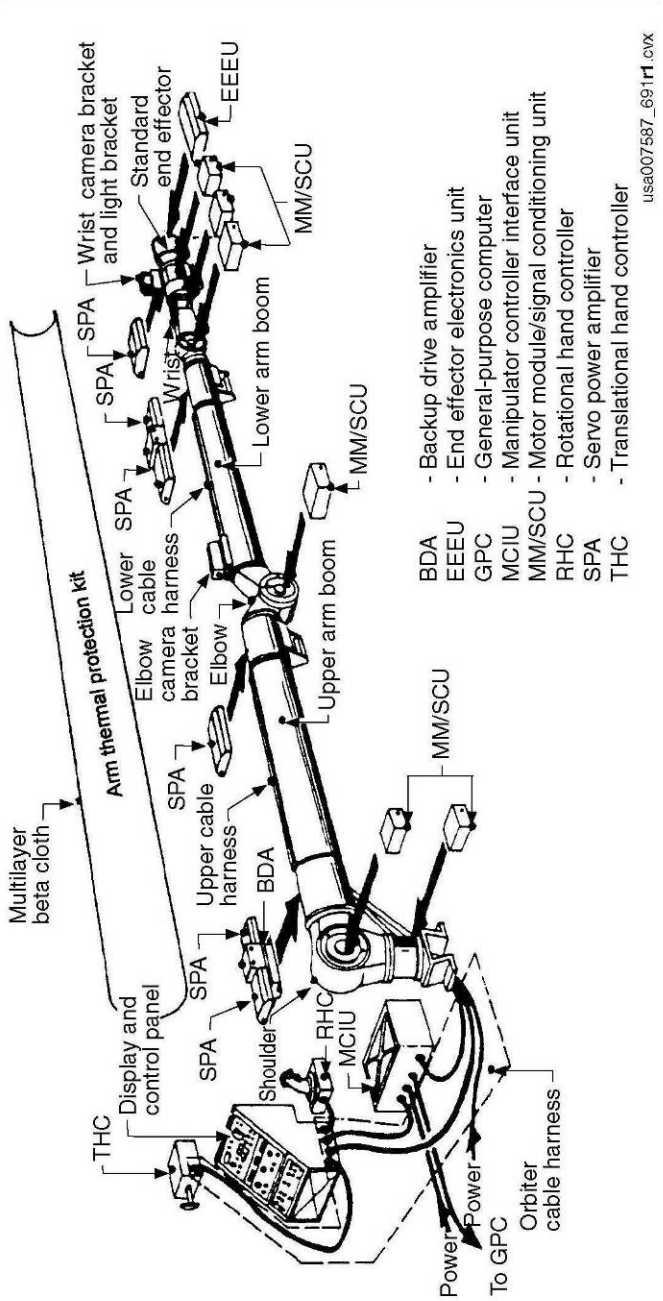

Figure B-146. Diagram showing the components of the RMS.
Source: USA. *Shuttle Crew Operations Manual*, 2.21-3.

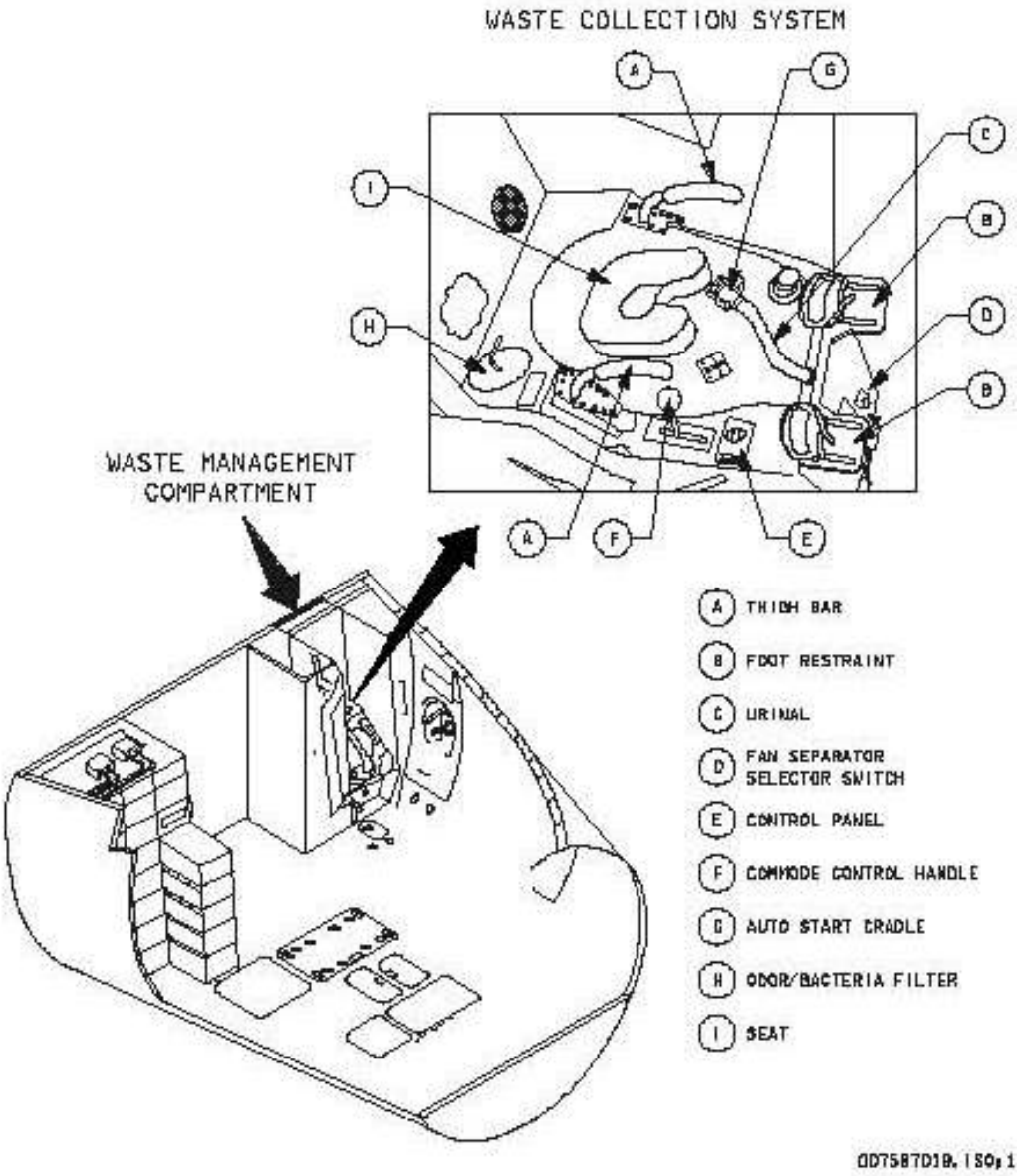

Figure B-147. Diagram of the waste management system.
Source: USA. *Shuttle Crew Operations Manual*, 2.25-3.

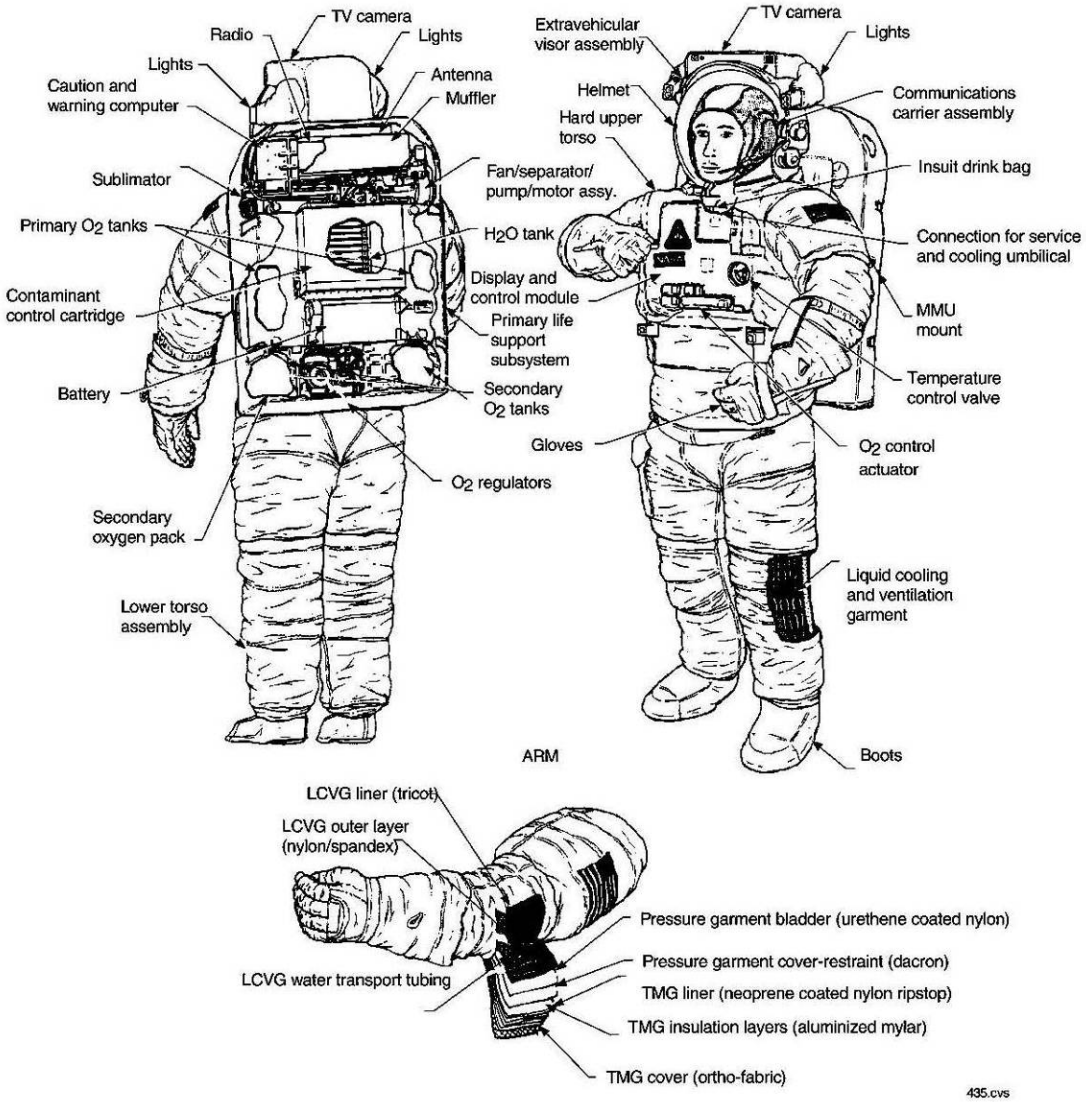

Figure B-148. Diagram of the extravehicular mobility unit.
Source: USA. *Shuttle Crew Operations Manual*, 2.11-2.

Appendix C-SSME Historic Photos

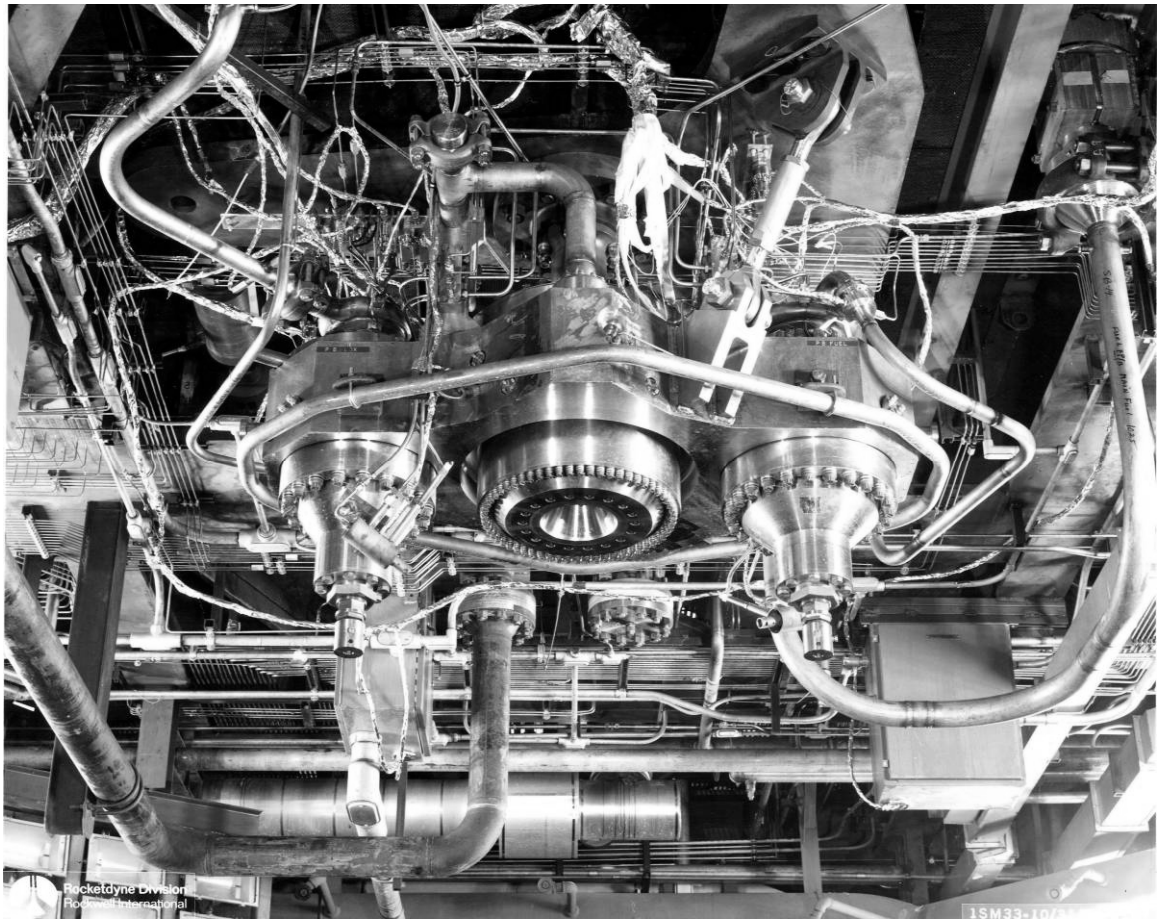

Figure C-1. SSME Solid Wall Hot Gas Manifold installed in Coca IV Test Stand, SSFL, direction unknown, October 31, 1974.
Source: Boeing Company/Santa Susana Field Laboratory, Photo No. 00395.

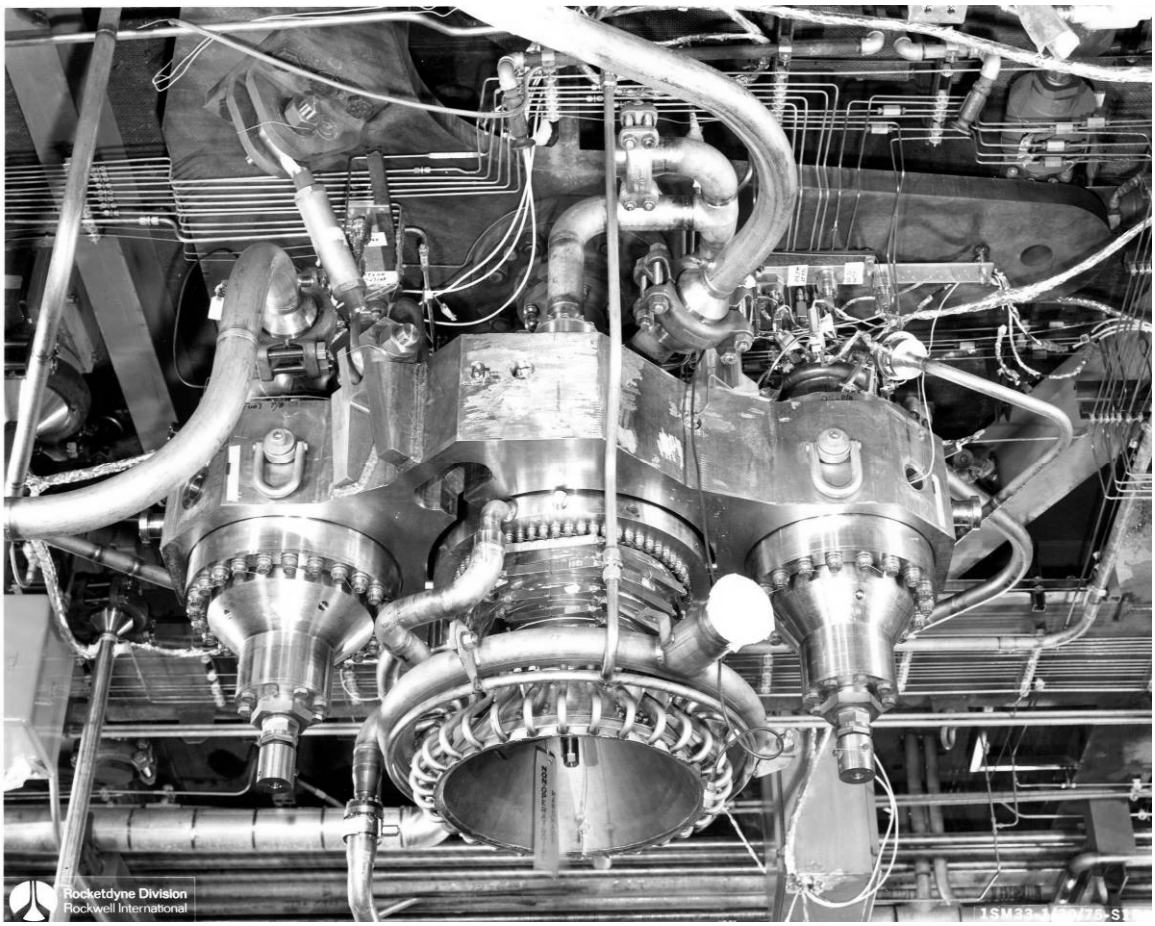

Figure C-2. SSME Solid Wall Hot Gas Manifold, with Main Combustion Chamber, installed in Coca IV Test Stand, SSFL, direction unknown, January 20, 1975.
Source: Boeing Company/Santa Susana Field Laboratory, Photo No. 00397.

Figure C-3. Testing of SSME Solid Wall Hot Gas Manifold installed in Coca I Test Stand, SSFL, direction and date unknown.
Source: Boeing Company/Santa Susana Field Laboratory, Photo No. 00299.

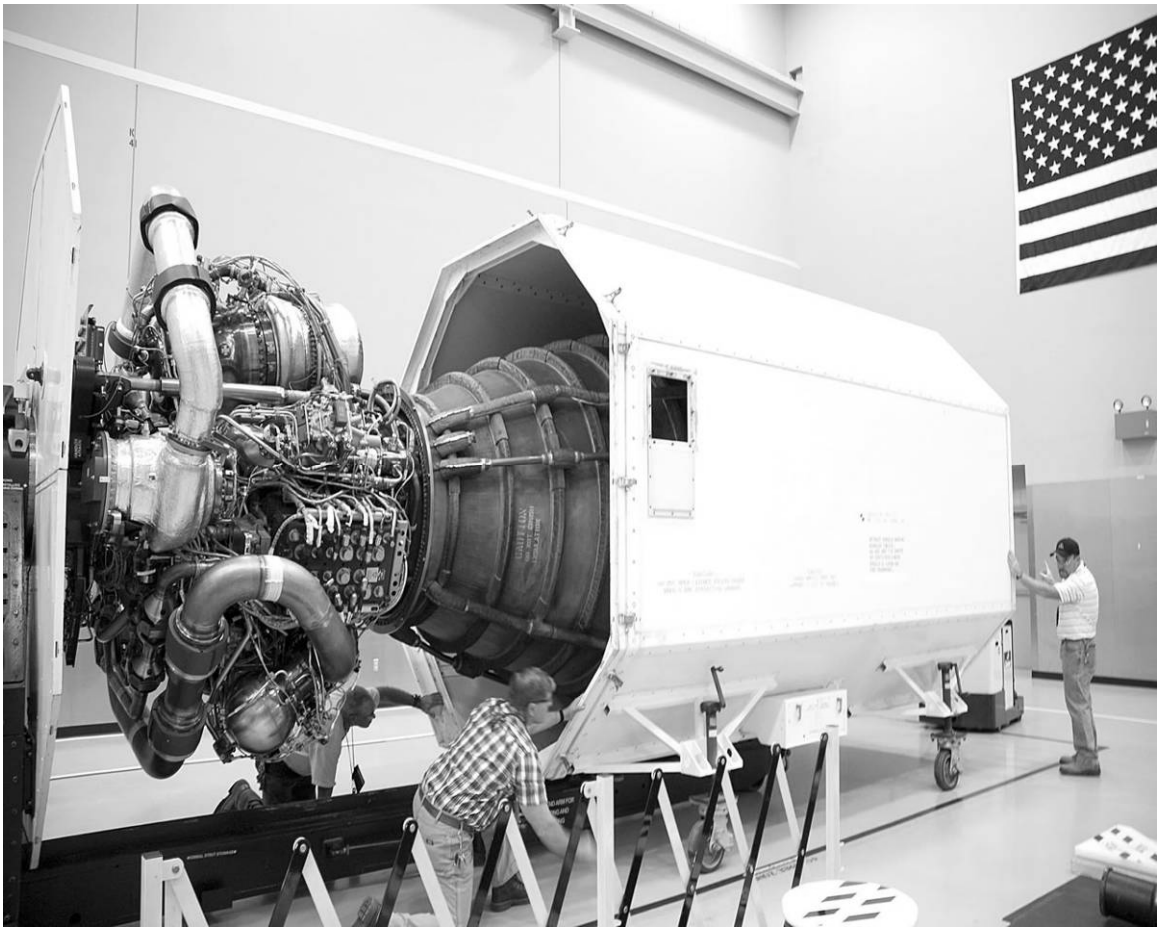

Figure C-4. Arrival of a SSME at SSC for testing, direction unknown, October 1, 2008. Source: John C. Stennis Space Center, SIRS, SSC-2008-01788, accessed at http://www.ssc.nasa.gov/sirs/scripts/xmlWelcome.pl.

Figure C-5. A SSME being lifted into Stand A-2 at SSC for testing, camera facing east, 1996. Source: John C. Stennis Space Center, SIRS, 96-427-13, accessed at http://www.ssc.nasa.gov/sirs/scripts/xmlWelcome.pl.

Figure C-6. Hoisting a SSME into SSC Test Stand A-2, direction unknown, 1979.
Source: John C. Stennis Space Center, Stennis Image Retrieval System (SIRS), 79-116-7, accessed at http://www.ssc.nasa.gov/sirs/scripts/xmlWelcome.pl.

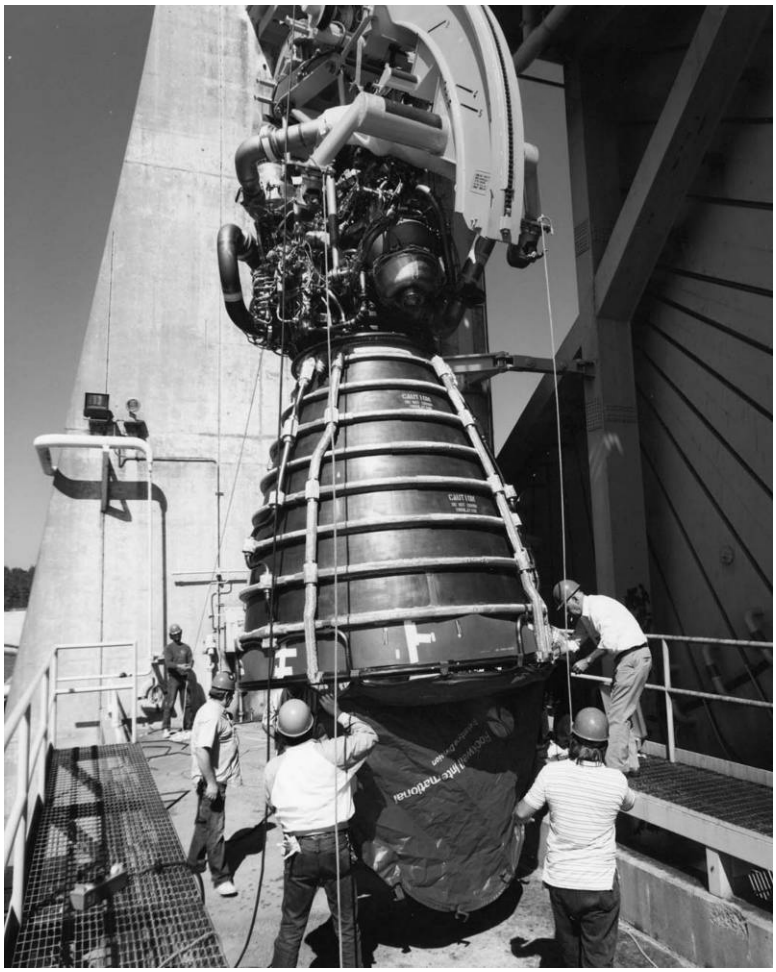

Figure C-7. Hoisting a SSME into SSC Test Stand A-2, camera facing north, 1990.
Source: John C. Stennis Space Center, Stennis Image Retrieval System (SIRS), 90-548-15, accessed at http://www.ssc.nasa.gov/sirs/scripts/xmlWelcome.pl.

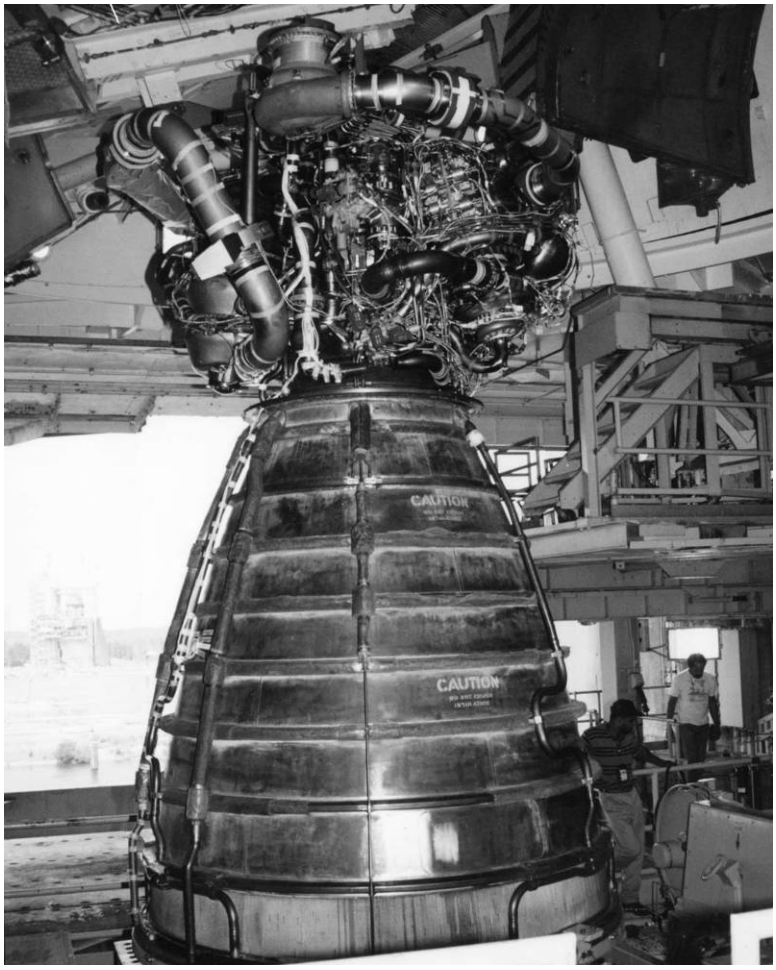

Figure C-8. Installing a SSME into SSC Test Stand A-2, camera facing northwest, 1996.
Source: John C. Stennis Space Center, SIRS, 96-430-19, accessed at
http://www.ssc.nasa.gov/sirs/scripts/xmlWelcome.pl.

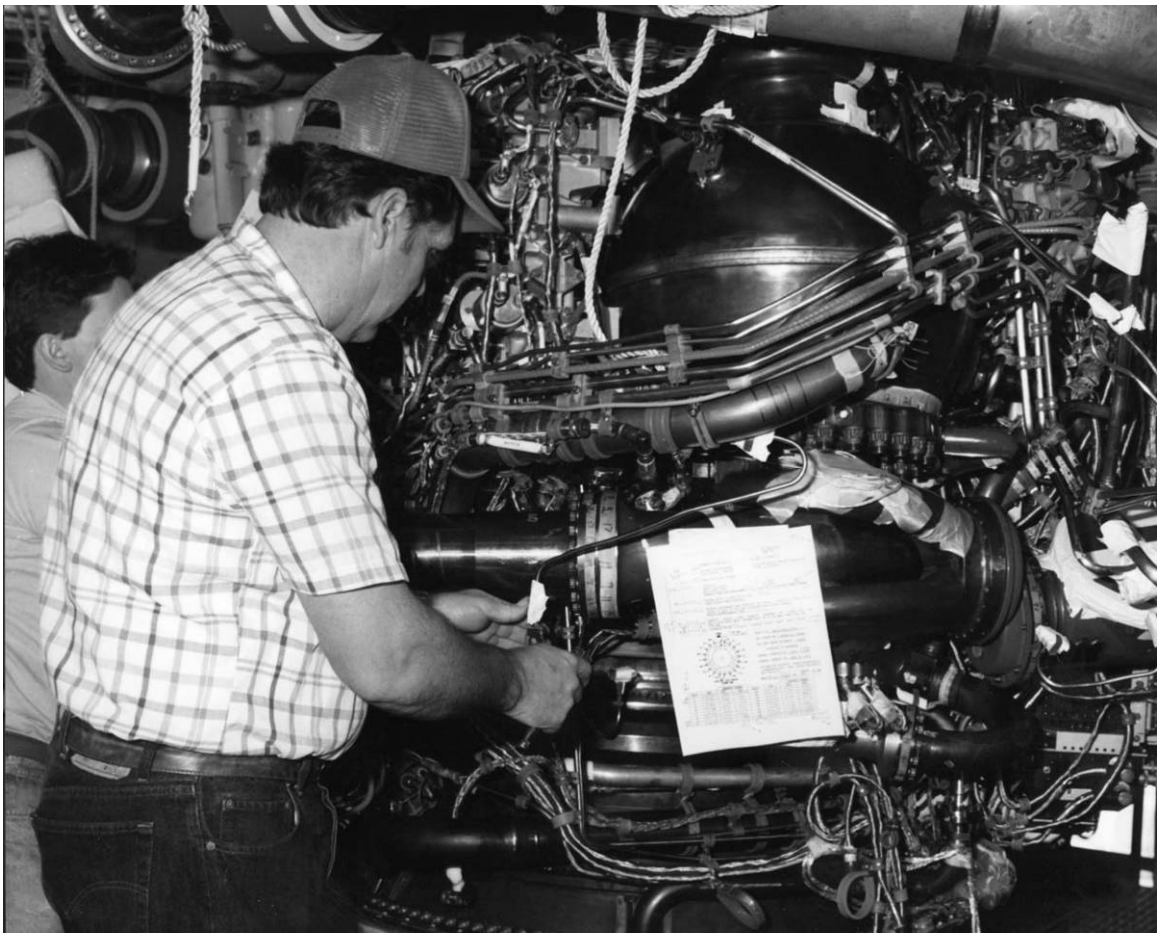

Figure C-9. Preparing a SSME for testing, direction unknown, 1989.
Source: John C. Stennis Space Center, SIRS, 89-082-4, accessed at http://www.ssc.nasa.gov/sirs/scripts/xmlWelcome.pl.

Figure C-10. Final preparations being made to a SSME for testing, direction unknown, October 25, 2005.
(Note: This is the first engine to be tested at SSC following Hurricane Katrina.)
Source: John C. Stennis Space Center, SIRS, 89-082-4, accessed at http://www.ssc.nasa.gov/sirs/scripts/xmlWelcome.pl.

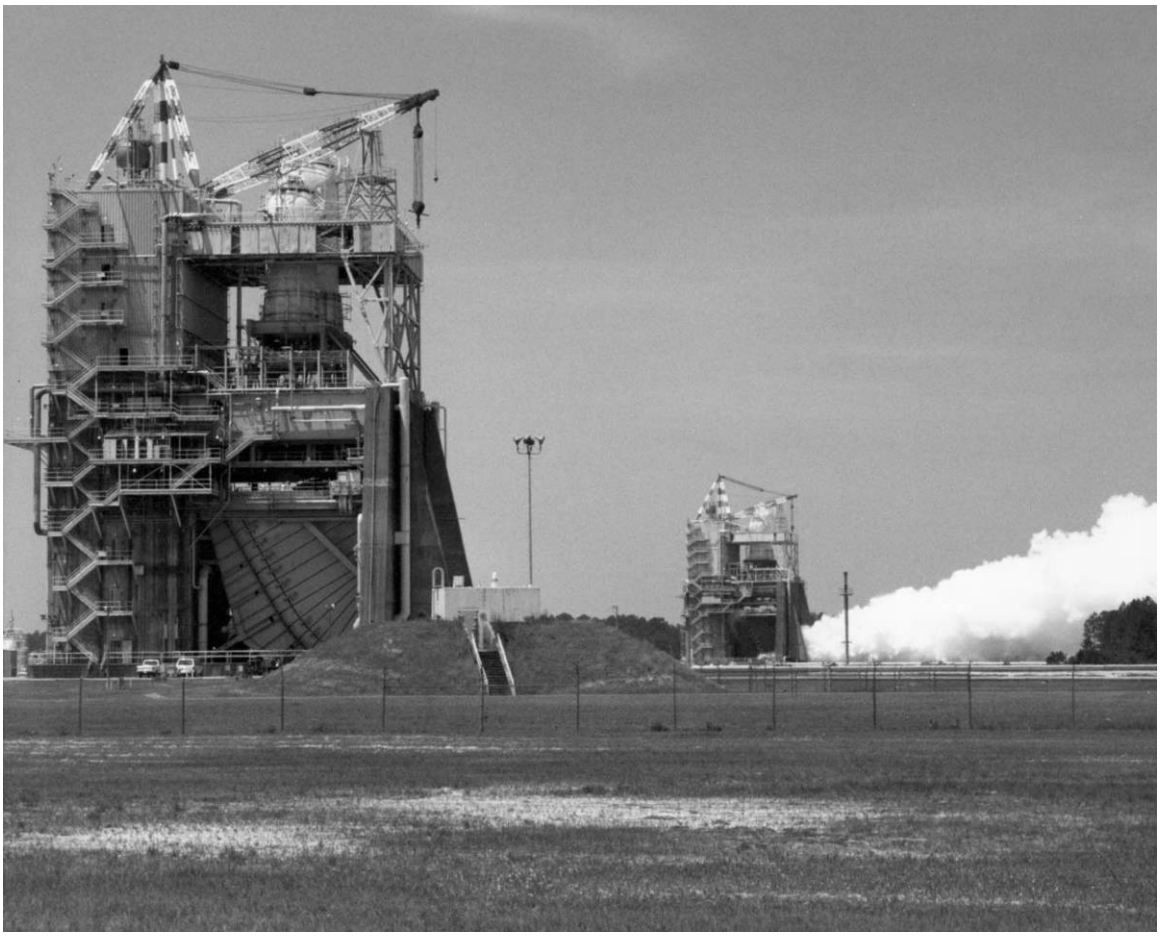

Figure C-11. A SSME undergoing testing on Stand A-1 (Stand A-2 in the foreground), camera facing southwest, 1987.
Source: John C. Stennis Space Center, SIRS, 87-242-23, accessed at http://www.ssc.nasa.gov/sirs/scripts/xmlWelcome.pl.

Figure C-12. A SSME undergoing testing on Stand A-2, camera facing southwest, March 30, 2009.
Source: John C. Stennis Space Center, SIRS, SSC-2009-00417, accessed at http://www.ssc.nasa.gov/sirs/scripts/xmlWelcome.pl.

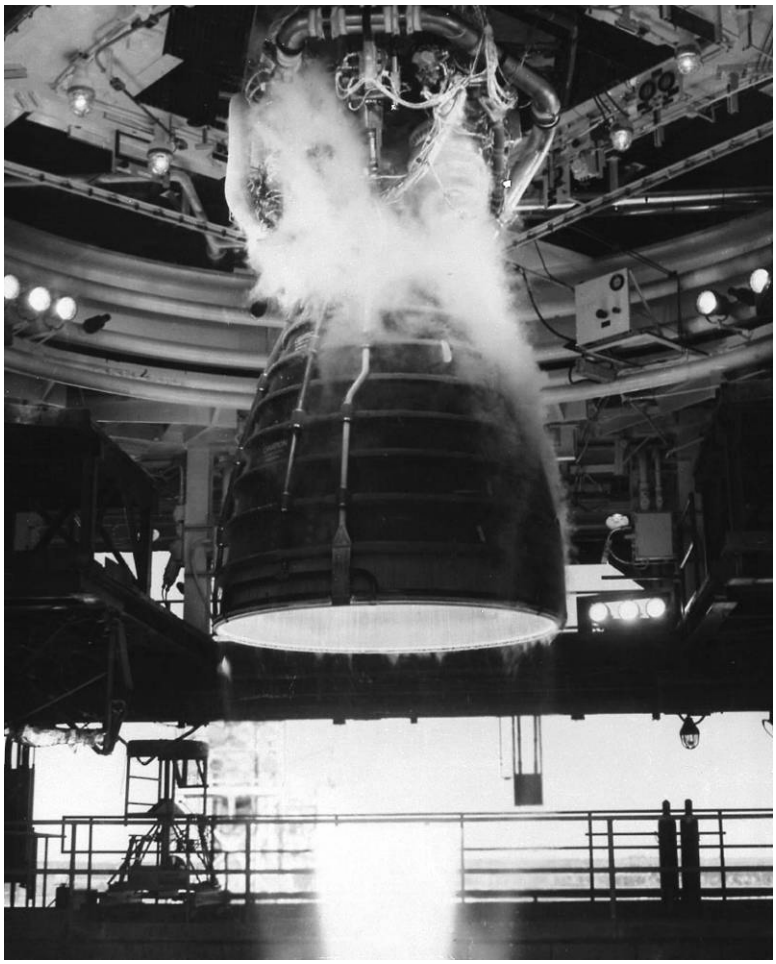

Figure C-13. Close-up view of a SSME test, direction unknown, April 1, 1979.
Source: George C. Marshall Space Flight Center, Marshall Image Exchange (MIX), 7995081, accessed at http://mix.msfc.nasa.gov/.

Figure C-14. Close-up view of a SSME test, direction unknown, 1994.
Source: John C. Stennis Space Center, SIRS, 94-engine, accessed at http://www.ssc.nasa.gov/sirs/scripts/xmlWelcome.pl.

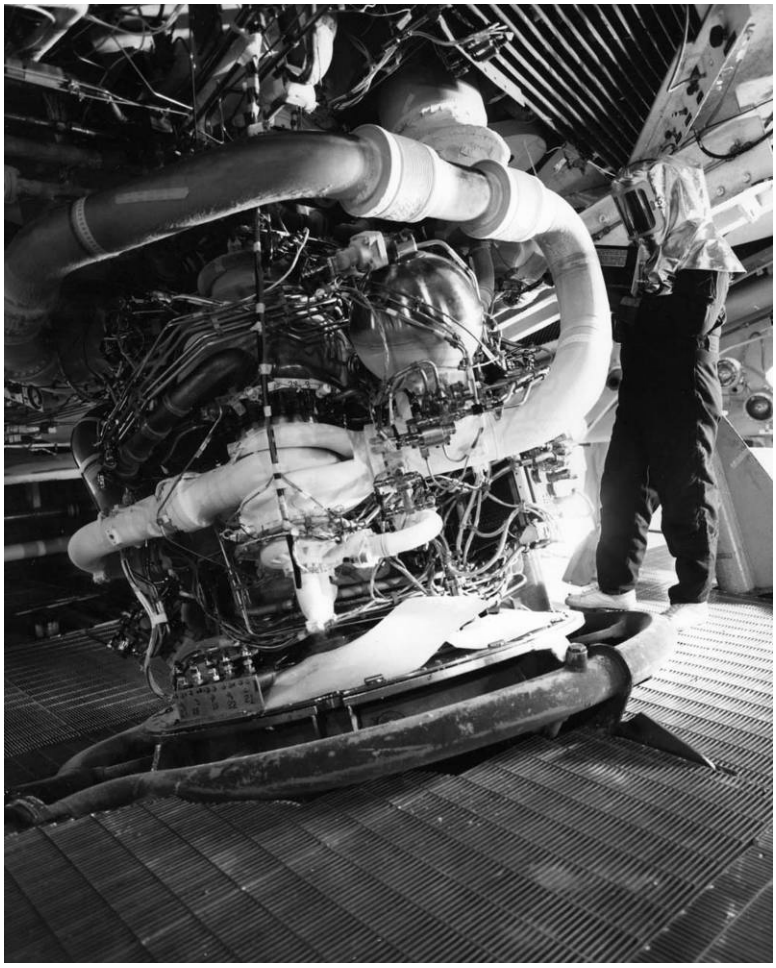

Figure C-15. Post-test inspection of a SSME, direction unknown, 1991.
Source: John C. Stennis Space Center, SIRS, 91-080-27, accessed at http://www.ssc.nasa.gov/sirs/scripts/xmlWelcome.pl.

Figure C-16. A "Return to Flight," Phase II SSME undergoing testing on Stand A-1, camera facing northeast, 1988.
Source: John C. Stennis Space Center, SIRS, 88-072-11, accessed at http://www.ssc.nasa.gov/sirs/scripts/xmlWelcome.pl.

Figure C-17. A Block I SSME undergoing testing on Stand A-1, direction unknown, 1995. Source: John C. Stennis Space Center, SIRS, 95-088-1, accessed at http://www.ssc.nasa.gov/sirs/scripts/xmlWelcome.pl.

Figure C-18. A Block II SSME undergoing flight certification testing on Stand A-2, camera facing west, July 25, 2000.
Source: John C. Stennis Space Center, SIRS, 00-176-22A, accessed at http://www.ssc.nasa.gov/sirs/scripts/xmlWelcome.pl.

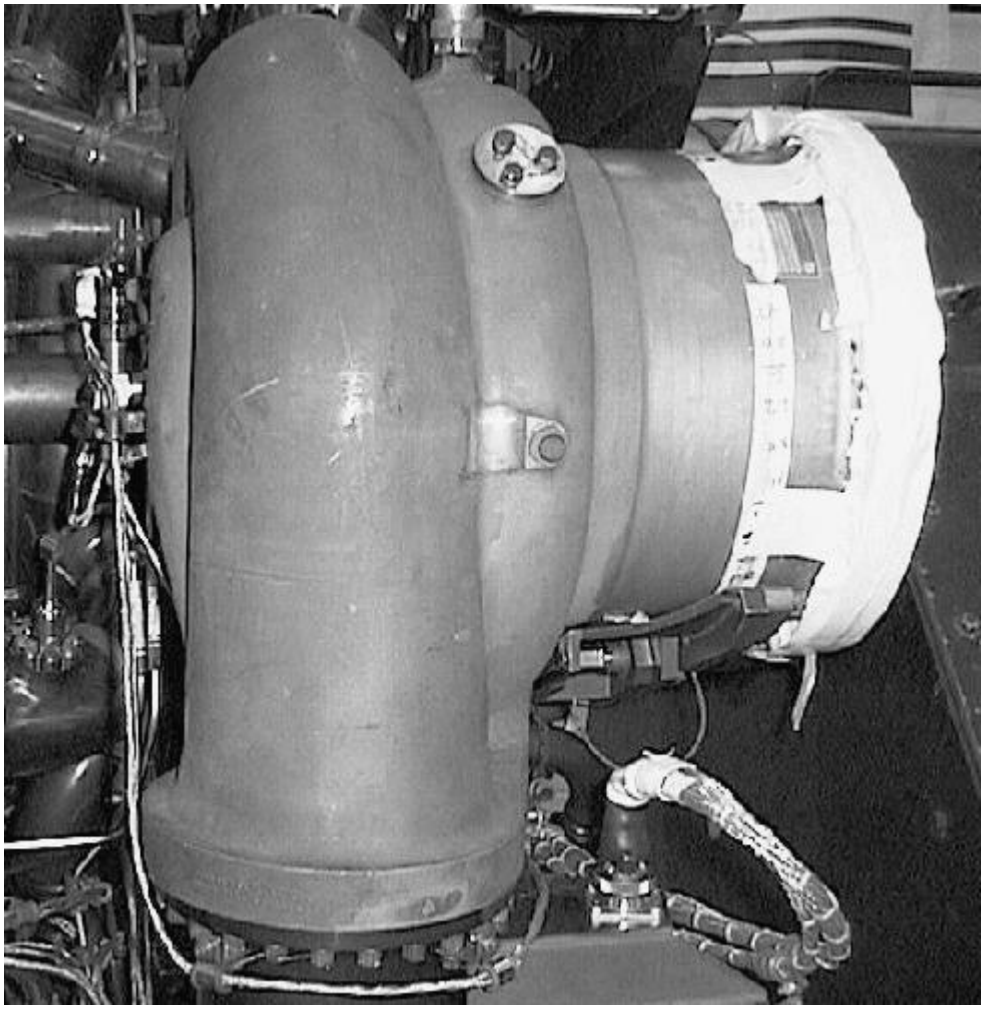

Figure C-19. SSME Low Pressure Oxidizer Turbopump.
Source: George C. Marshall Space Flight Center.

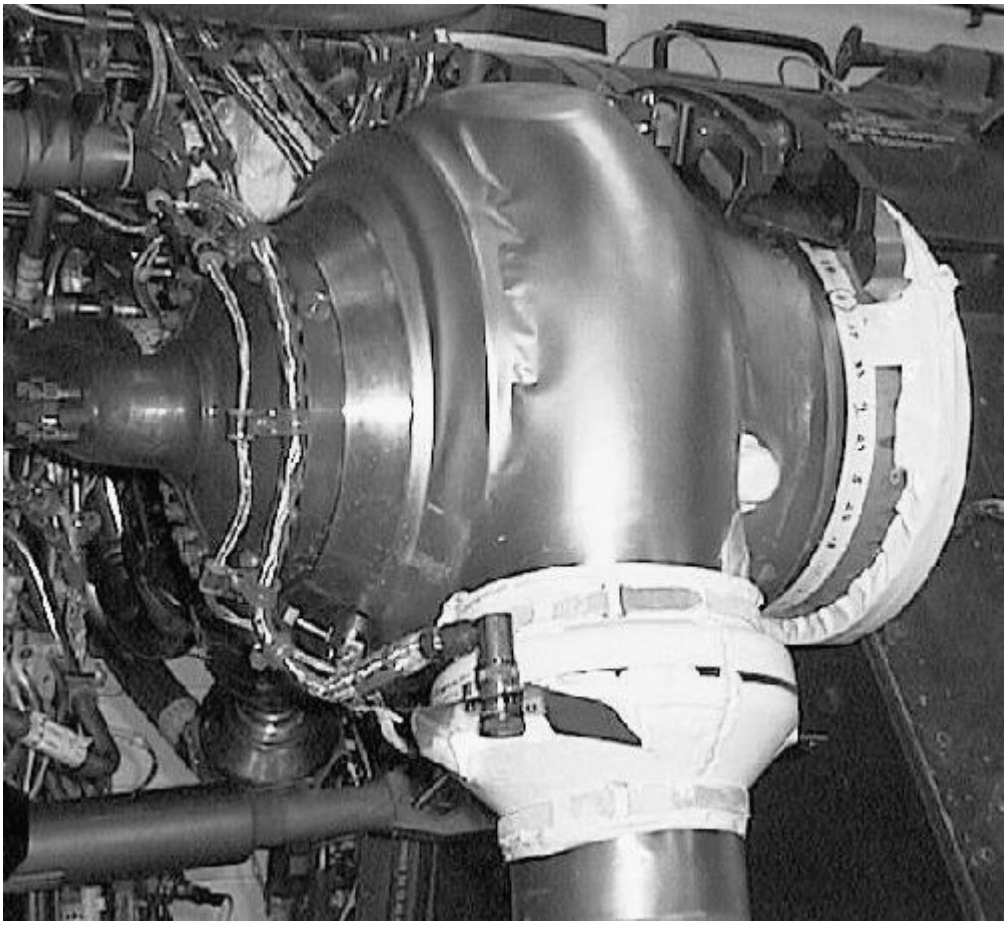

Figure C-20. SSME Low Pressure Fuel Turbopump.
Source: George C. Marshall Space Flight Center.

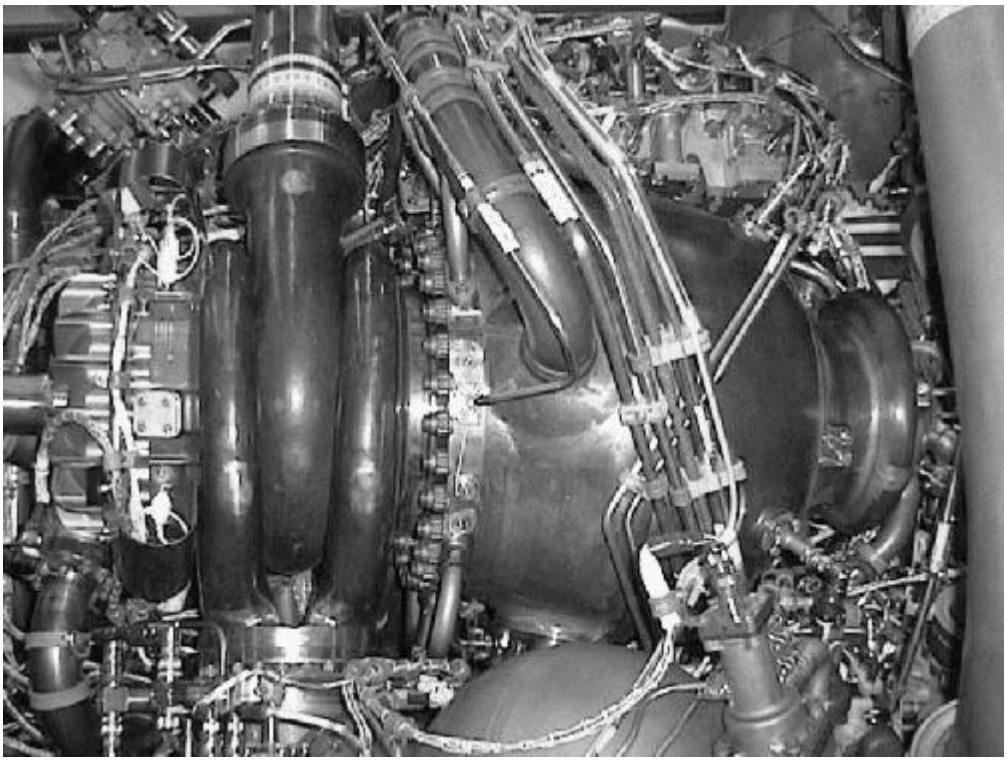

Figure C-21. SSME High Pressure Oxidizer Turbopump.
Source: George C. Marshall Space Flight Center.

Figure C-22. SSME High Pressure Fuel Turbopump.
Source: George C. Marshall Space Flight Center.

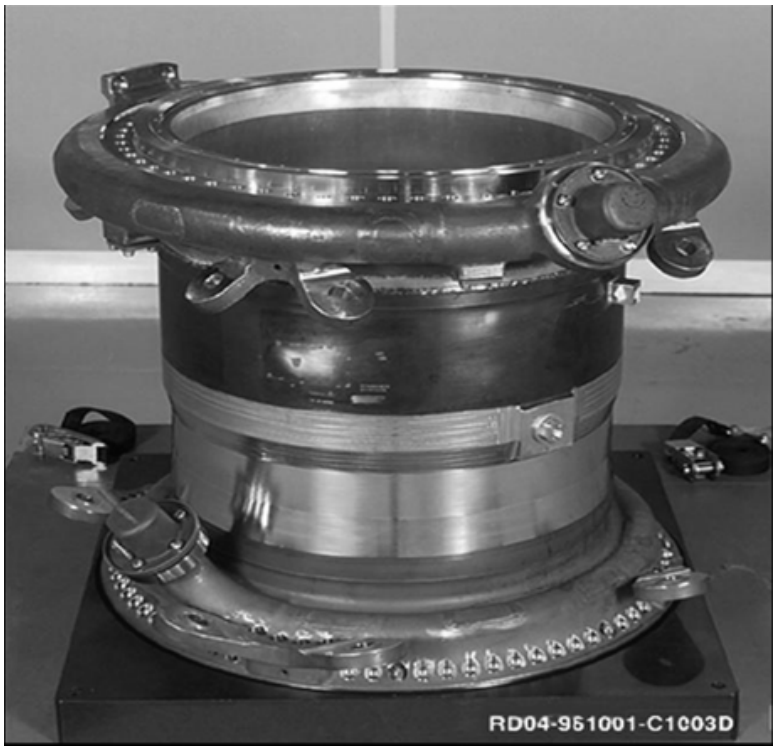

Figure C-23. SSME Main Combustion Chamber.
Source: George C. Marshall Space Flight Center.

Figure C-24. SSME Nozzle.
Source: George C. Marshall Space Flight Center.

Figure C-25. A technician reams holes into the SSME main injector body at Rocketdyne's Canoga Park, California, facility, direction unknown, August 1, 1978.
Source: George C. Marshall Space Flight Center, Marshall Image Exchange (MIX), 7779474, accessed at http://mix.msfc.nasa.gov/.

Figure C-26. A technician machining a SSME Oxidizer Preburner Body on the 5-Axis Omni Mill, Canoga Park, 1973.
Source: *History of the Air Force Plant Representative Office Rockwell International Corporation Rocketdyne Division 1 July – 31 December 1973.*

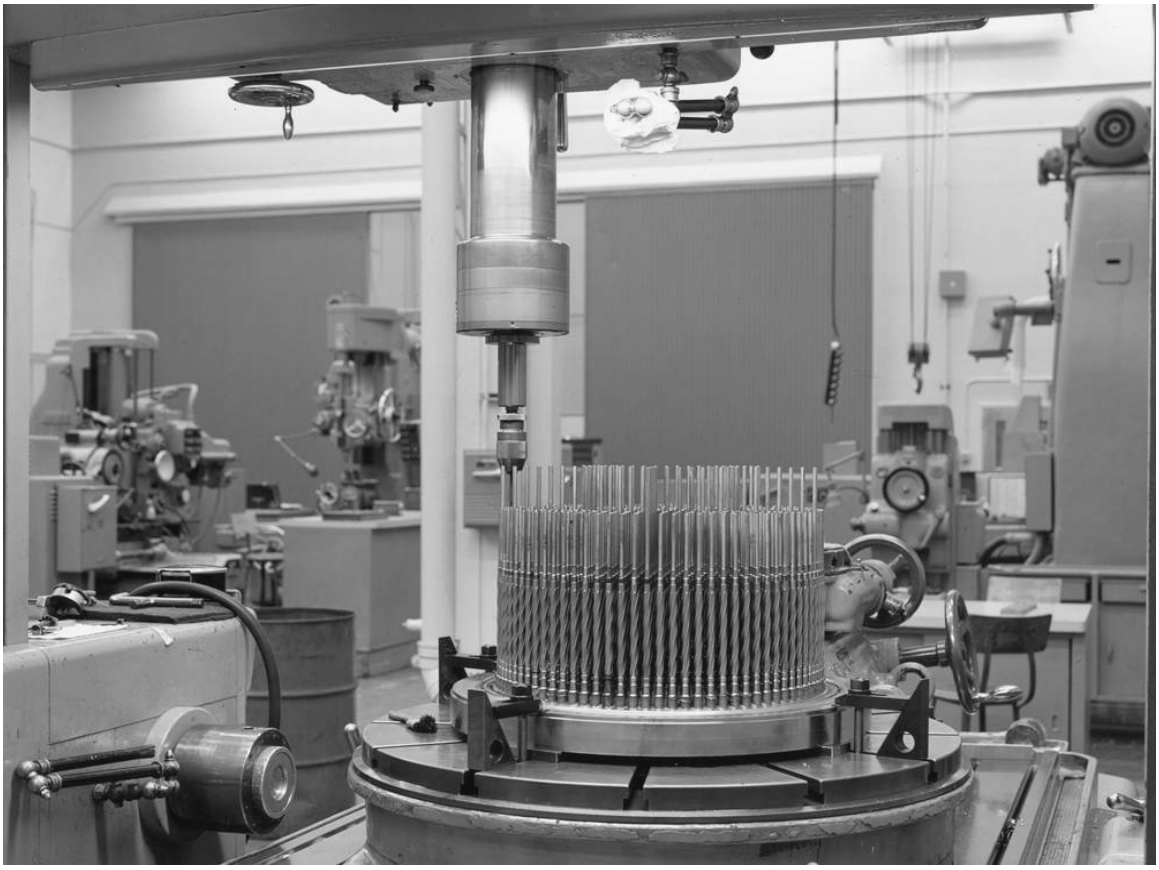

Figure C-27. Line Reaming of 600 Injector Posts for the Assembly of the Main Injector Body of the SSME, on a Precision Jig Bore, Canoga Park, 1974.
Source: *History of the Air Force Plant Representative Office Rockwell International Corporation Rocketdyne Division 1 January – 30 June 1974.*

Figure C-28. Milling of the 390 Inlet Slots around the outer periphery of the Main Combustion Chamber of the SSME, on a Sundstrand Numerical Controlled Mill.
Source: *History of the Air Force Plant Representative Office Rockwell International Corporation Rocketdyne Division 1 January – 30 June 1974.*

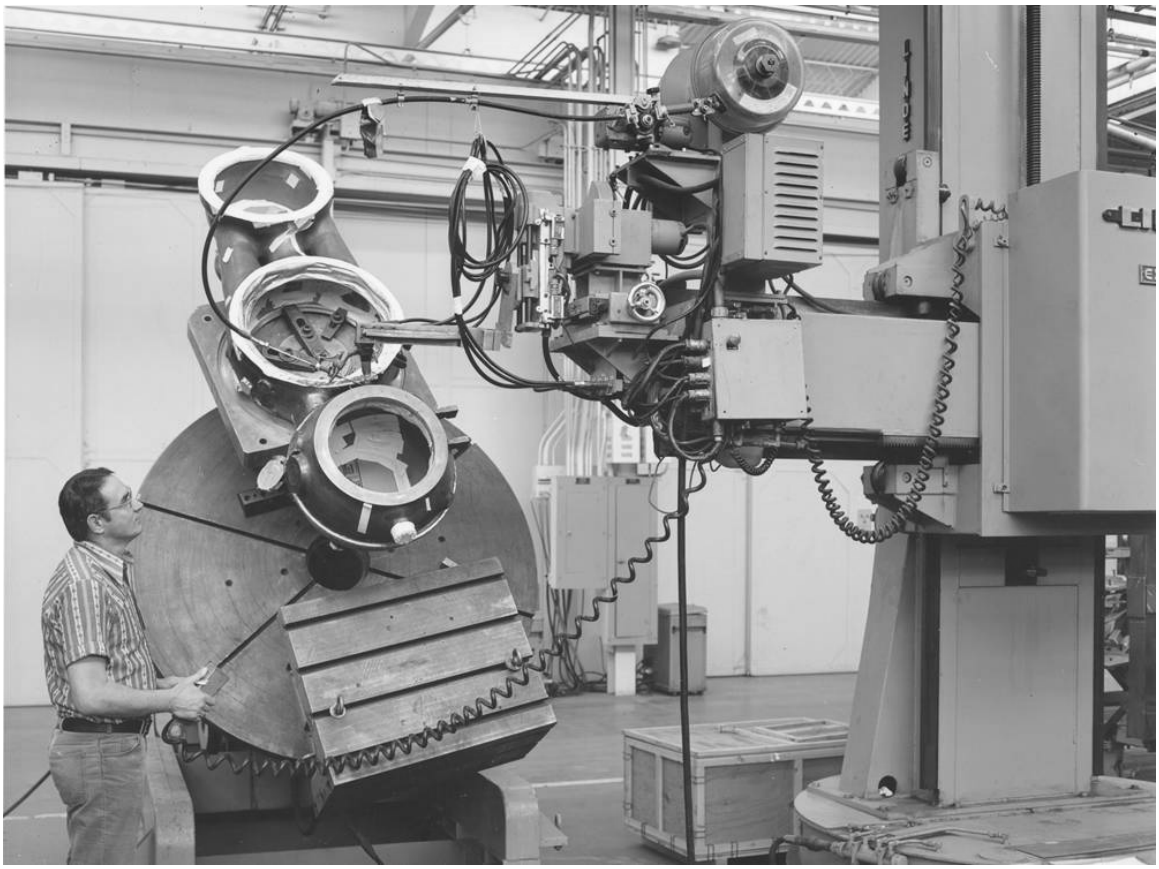

Figure C-29. A Rocketdyne technician uses the Linde Automatic Welder to apply Weld Overlay Material on the Heat Exchanger to the Manifold Joint of the SSME 0001's Solid Wall Hot Gas Manifold (SWHGM), Canoga Park, 1974.
Source: *History of the Air Force Plant Representative Office Rockwell International Corporation Rocketdyne Division 1 July – 31 December 1974.*

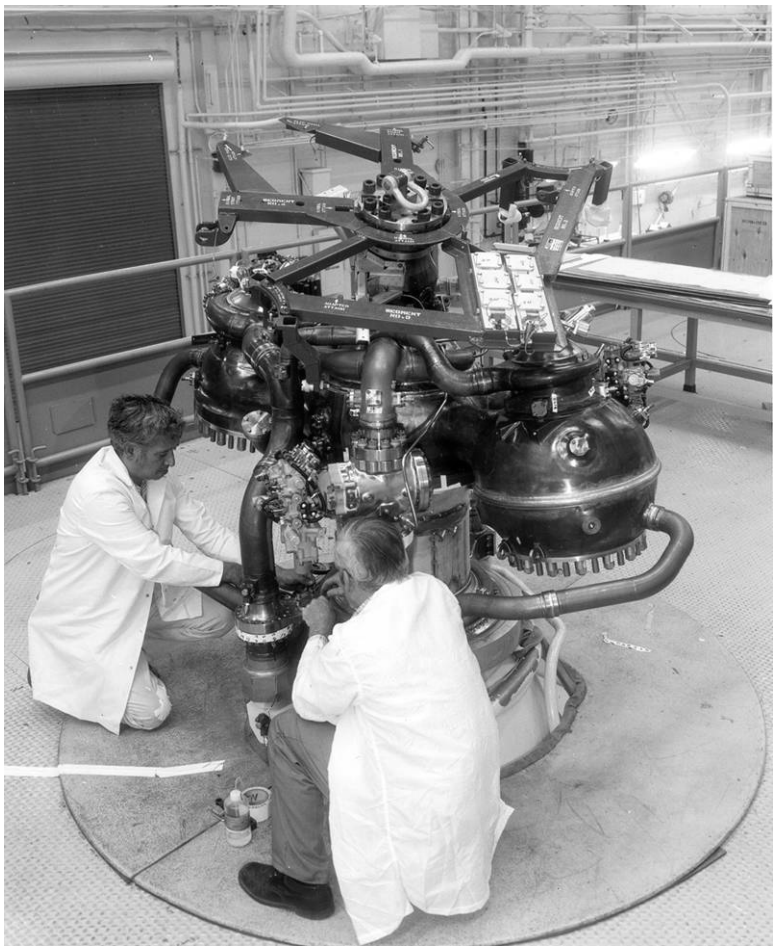

Figure C-30. Rocketdyne technicians connect a Powerhead Duct to a Combustion Device on SSME 0004, 1976.
Source: *History of the Air Force Plant Representative Office Rockwell International Corporation Rocketdyne Division 1 January – 31 December 1976.*

Figure C-31. Technicians attach the Main Combustion Chamber to the Nozzle in the SSMEPF at Kennedy Space Center, camera facing northeast, date unknown.
Source: George C. Marshall Space Flight Center.

Figure C-32. Attachment of the Powerhead to the Main Combustion Chamber, SSMEPF, camera facing northeast, date unknown.
Source: George C. Marshall Space Flight Center.

Figure C-33. A technician attaches the High Pressure Oxidizer Turbopump to the SSME, SSMEPF, camera facing northeast, date unknown.
Source: George C. Marshall Space Flight Center.

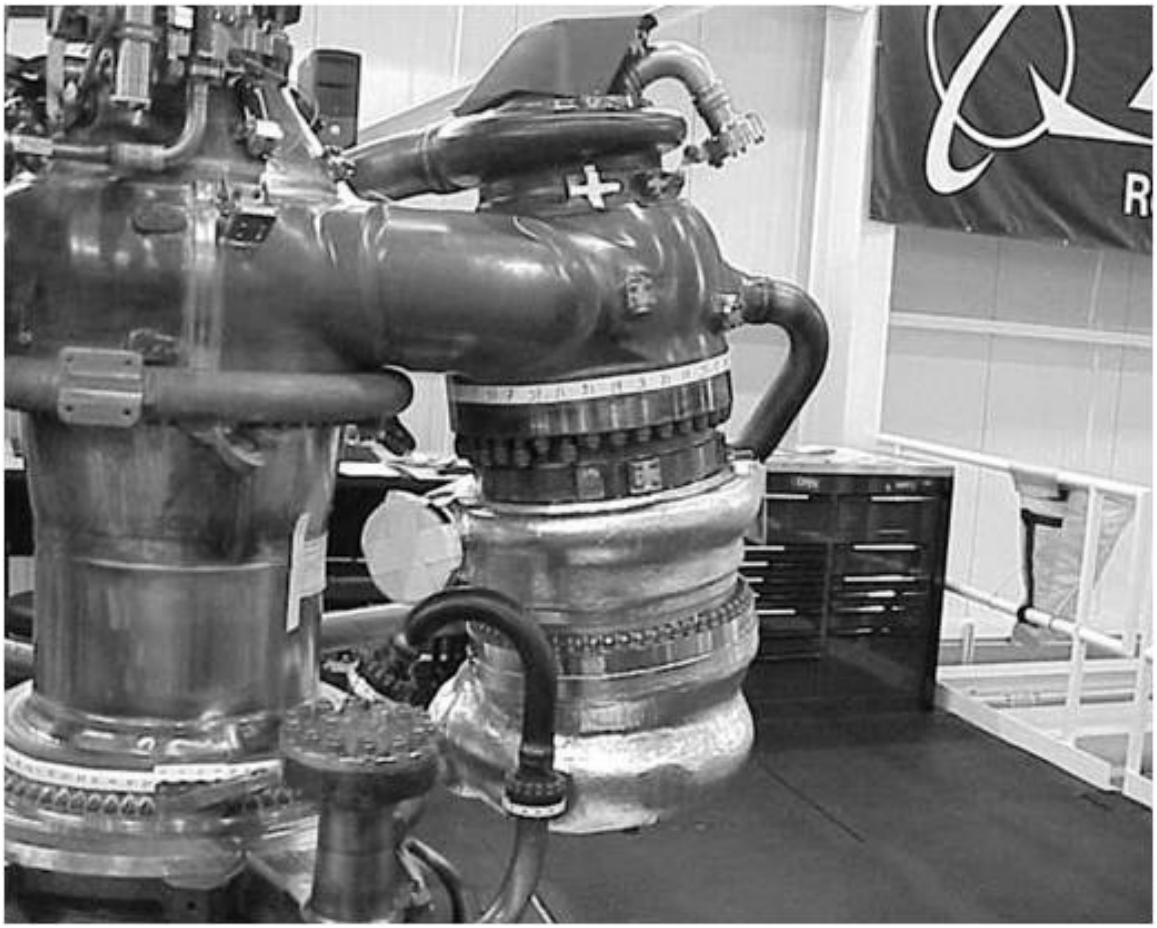

Figure C-34. Attachment of the High Pressure Fuel Turbopump to the SSME, SSMEPF, camera facing north, date unknown.
Source: George C. Marshall Space Flight Center.

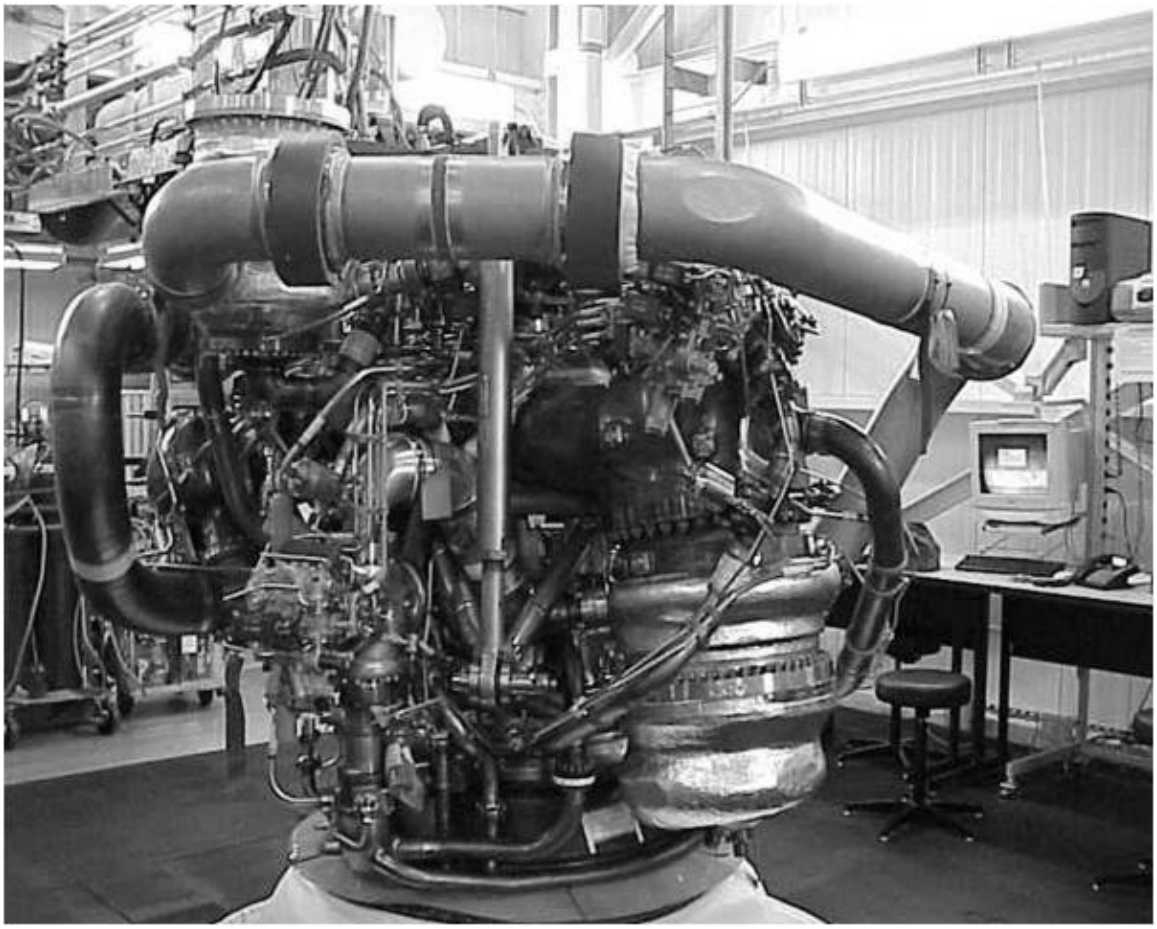

Figure C-35. Attachment of engine ducts and lines to the SSME, SSMEPF, camera facing northeast, date unknown.
Source: George C. Marshall Space Flight Center.

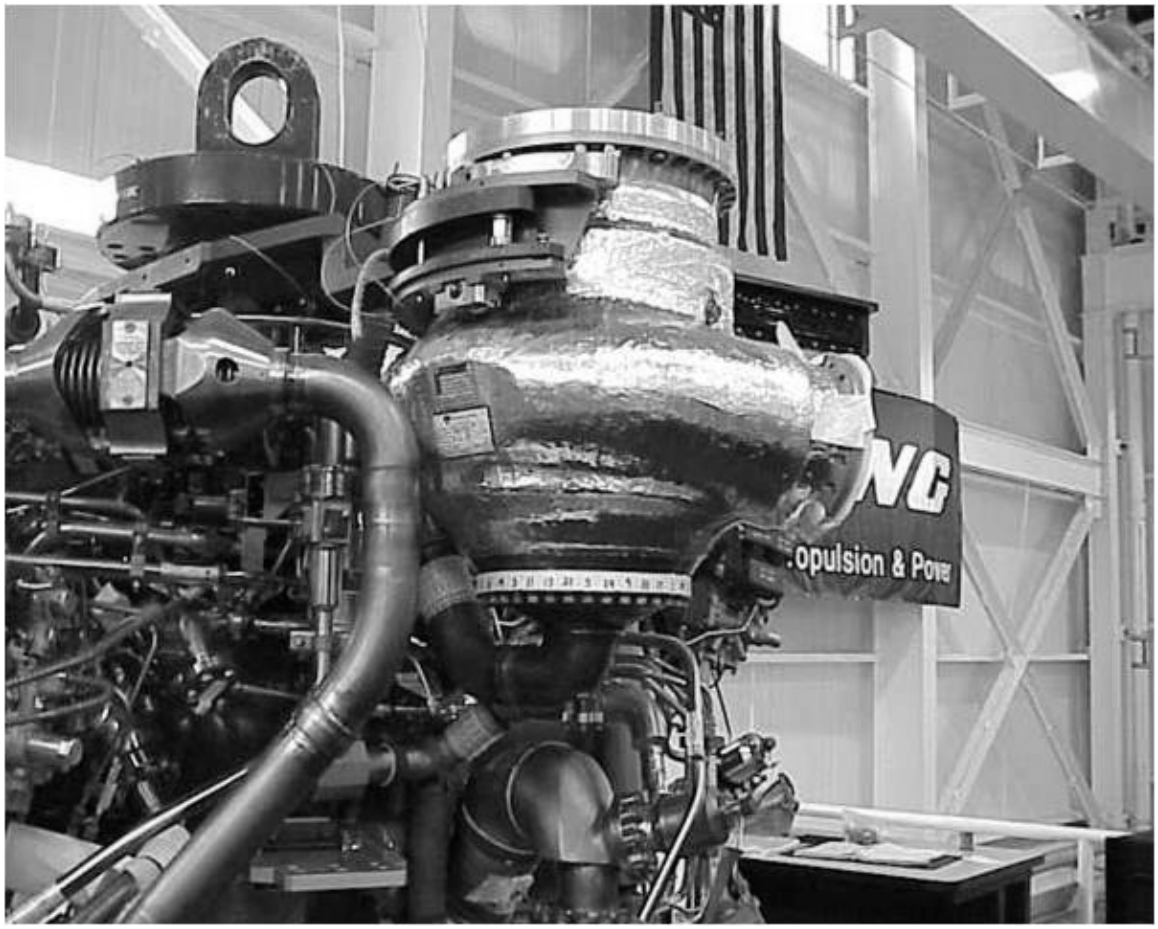

Figure C-36. Attachment of the Low Pressure Oxidizer Turbopump and the Low Pressure Fuel Turbopump to the SSME, SSMEPF, camera facing northeast, date unknown.
Source: George C. Marshall Space Flight Center.

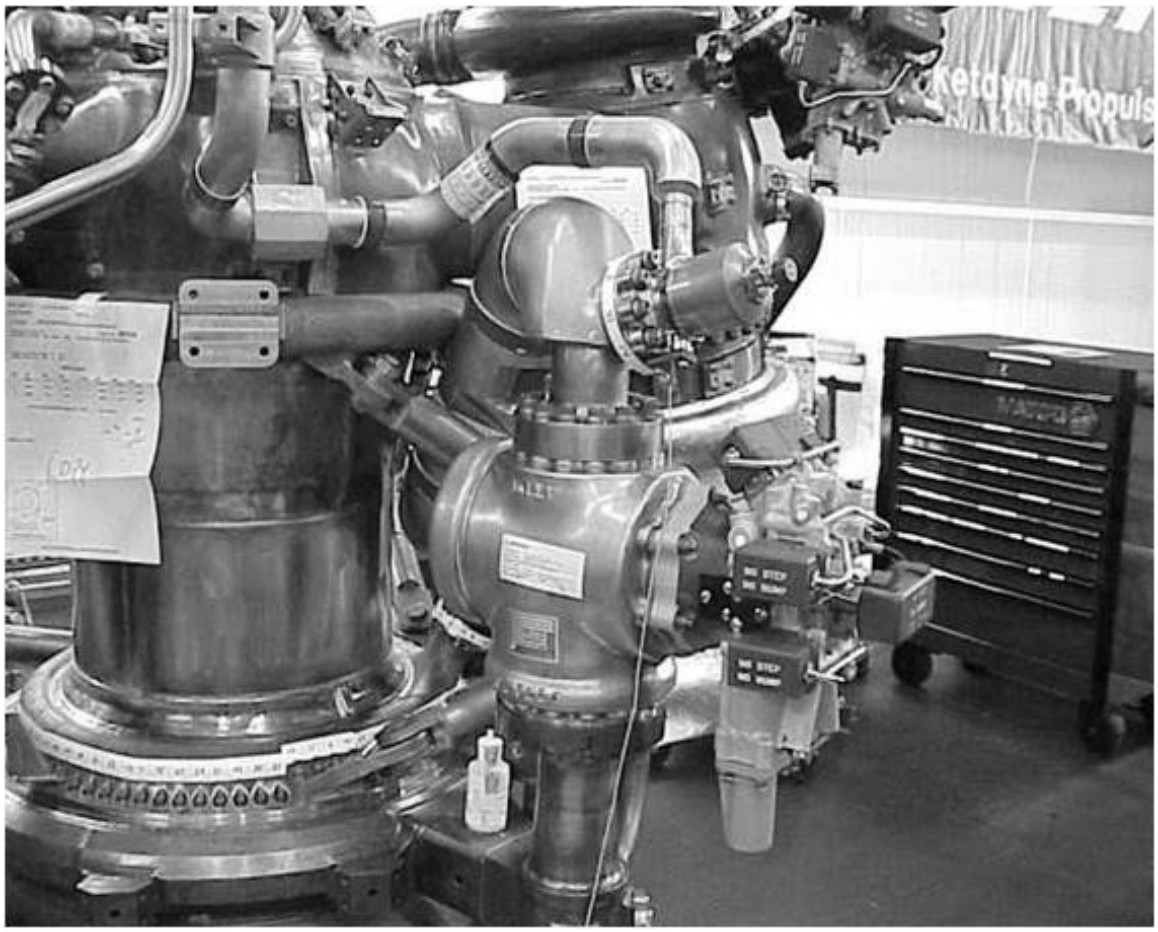

Figure C-37. Attachment of the main fuel valve and the main fuel valve assembly to the SSME, SSMEPF, camera facing northeast, date unknown.
Source: George C. Marshall Space Flight Center.

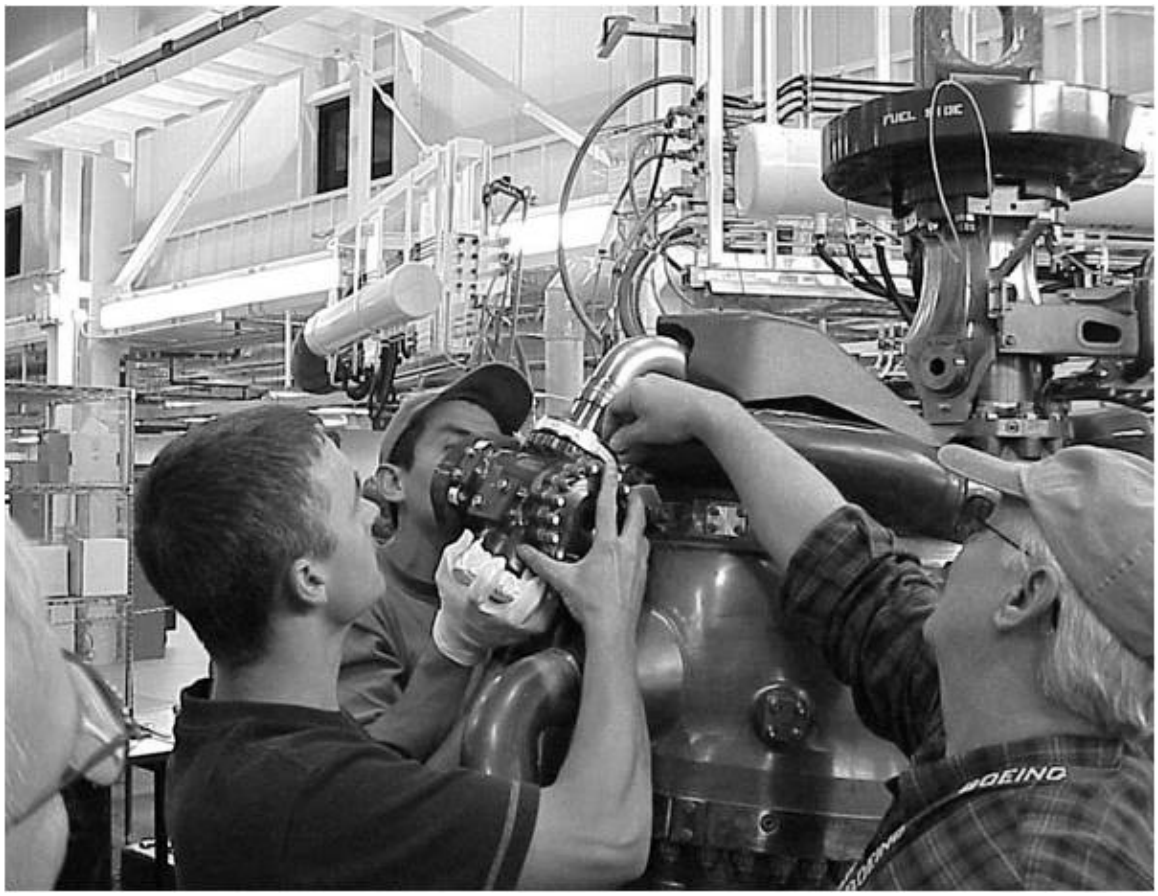

Figure C-38. Technicians attach the fuel preburner oxidizer valve and the fuel preburner oxidizer valve assembly to the SSME, SSMEPF, camera facing southwest, date unknown.
Source: George C. Marshall Space Flight Center.

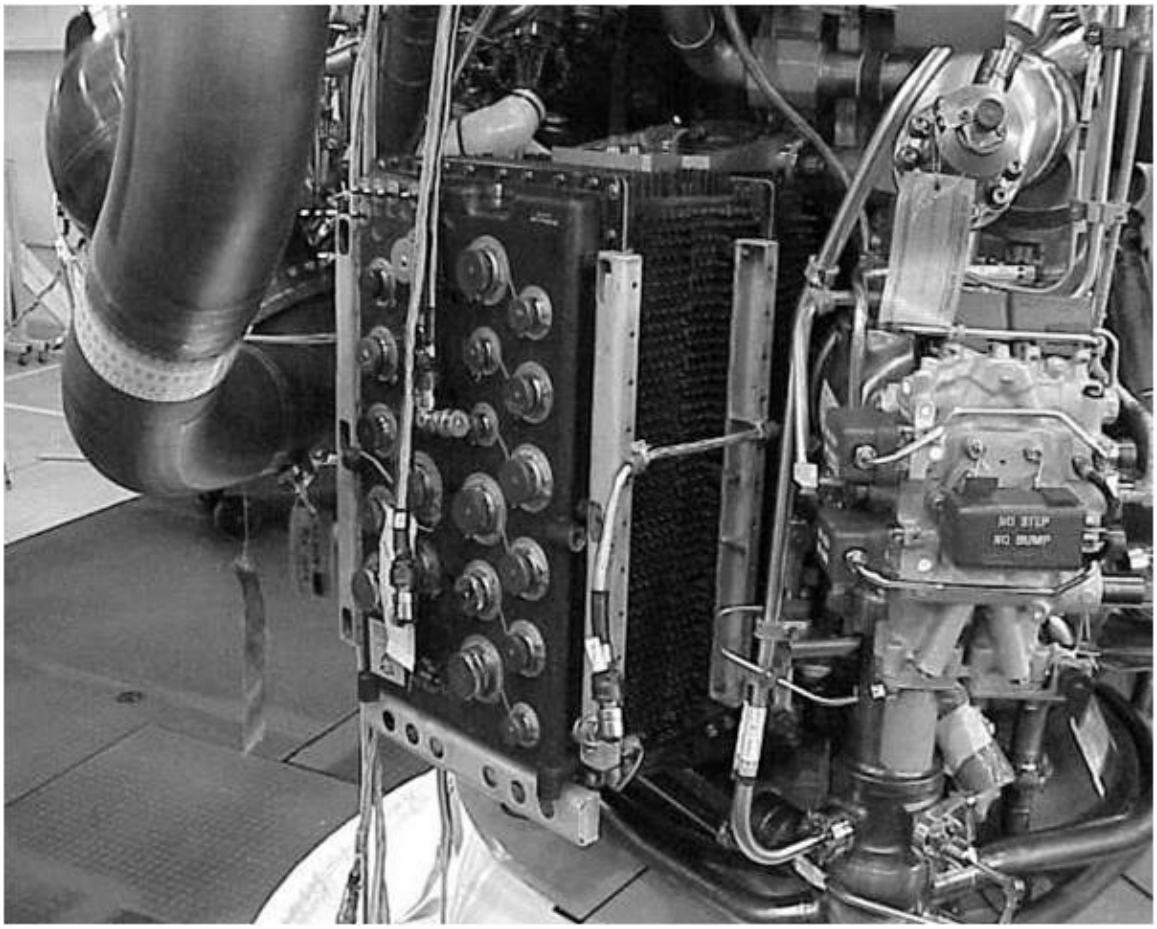

Figure C-39. Attachment of the main engine controller to the SSME, SSMEPF, camera facing northeast, date unknown.
Source: George C. Marshall Space Flight Center.

Figure C-40. Arrival of a SSME at OPF-3, Kennedy Space Center, for installation into engine position No. 1 of *Discovery*, camera facing northwest, June 30, 2010.
Source: John F. Kennedy Space Center Online Multimedia Gallery, KSC-2010-3923.

Figure C-41. A SSME lifted for installation into engine position No. 1 of *Discovery*, OPF-3, camera facing northwest, June 30, 2010.
Source: John F. Kennedy Space Center Online Multimedia Gallery, KSC-2010-3925.
.

Figure C-42. A SSME being maneuvered into engine position No. 1 of *Discovery*, OPF-3, camera facing west, June 30, 2010.
Source: John F. Kennedy Space Center Online Multimedia Gallery, KSC-2010-3927.

Figure C-43. A SSME lifted for installation into engine position No. 3 of *Discovery*, OPF-3, camera facing northeast, June 30, 2010.
Source: John F. Kennedy Space Center Online Multimedia Gallery, KSC-2010-3929.

Figure C-44. A SSME being maneuvered into engine position No. 3 of *Discovery*, OPF-3, camera facing northeast, June 30, 2010.
Source: John F. Kennedy Space Center Online Multimedia Gallery, KSC-2010-3932.

Figure C-45. A SSME being brought into OPF-3 for installation into engine position No. 2 of *Discovery*, camera facing northeast, July 1, 2010.
Source: John F. Kennedy Space Center Online Multimedia Gallery, KSC-2010-3933.

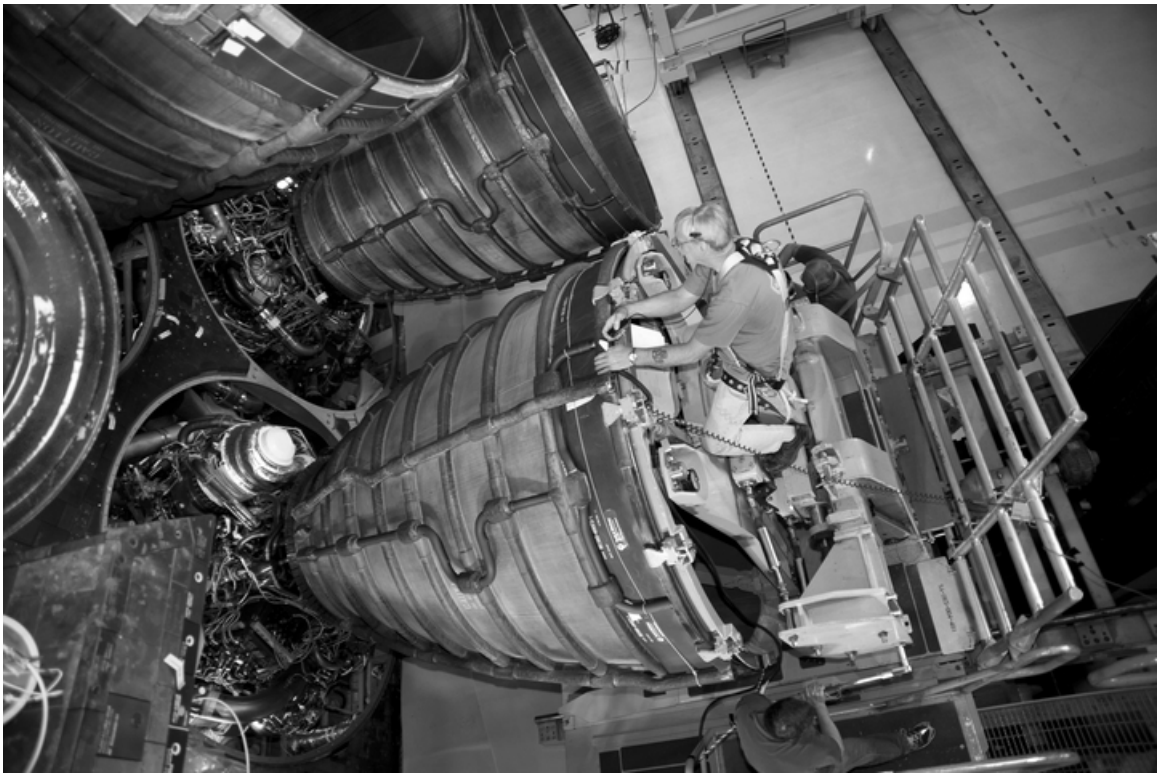

Figure C-46. A SSME being maneuvered into engine position No. 2 of *Discovery*, OPF-3, camera facing northeast, July 1, 2010.
Source: John F. Kennedy Space Center Online Multimedia Gallery, KSC-2010-3936.

Appendix D-ET Historic Photos

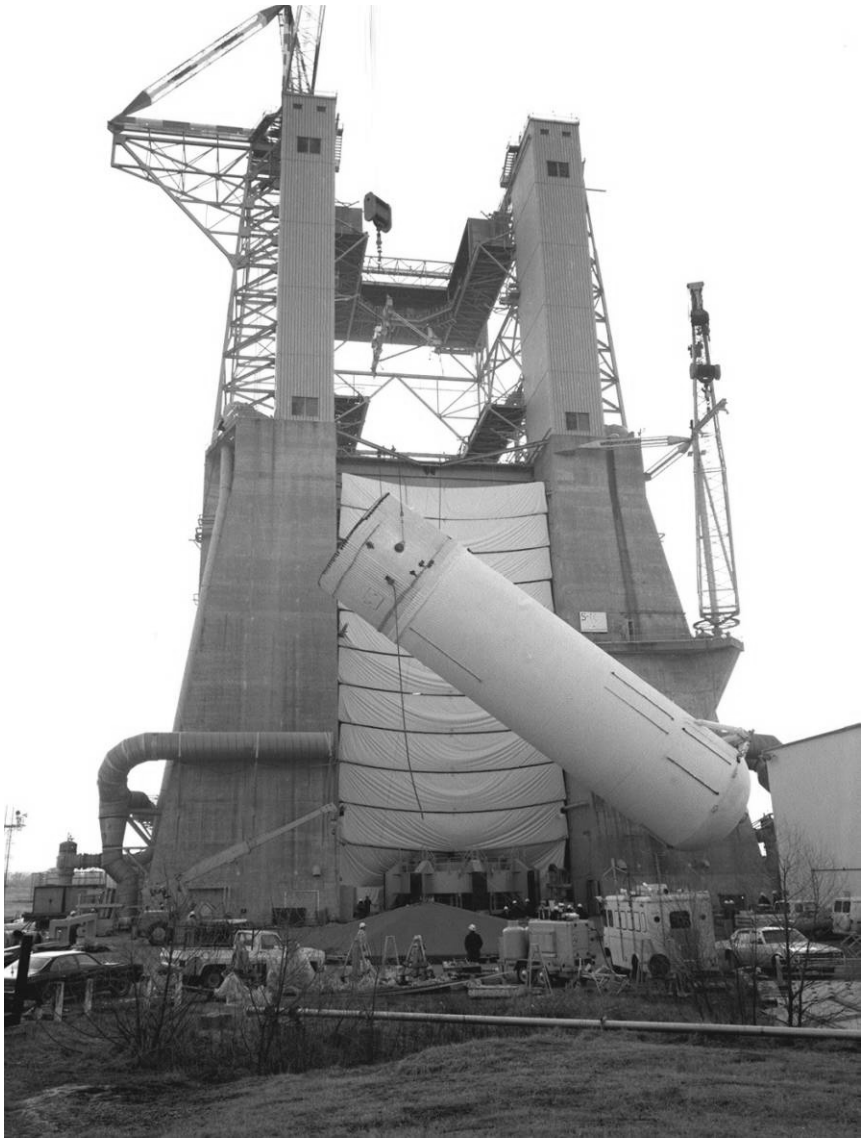

Figure D-1. Liquid hydrogen tank of the ET is installed into the S-1C Test Stand at MSFC for a structural test, March 1, 1978.
Source: NASA – MSFC, ID: MSFC-7887775, accessed at http://www.nix.ksc.nasa.gov.

Figure D-2. Liquid oxygen tank of the ET during a hydroelastic modal test at MSFC, May 1, 1978.
Source: NASA, Marshall Space Flight Center, MSFC-7889312, accessed at http://www.nix.ksc.nasa.gov.

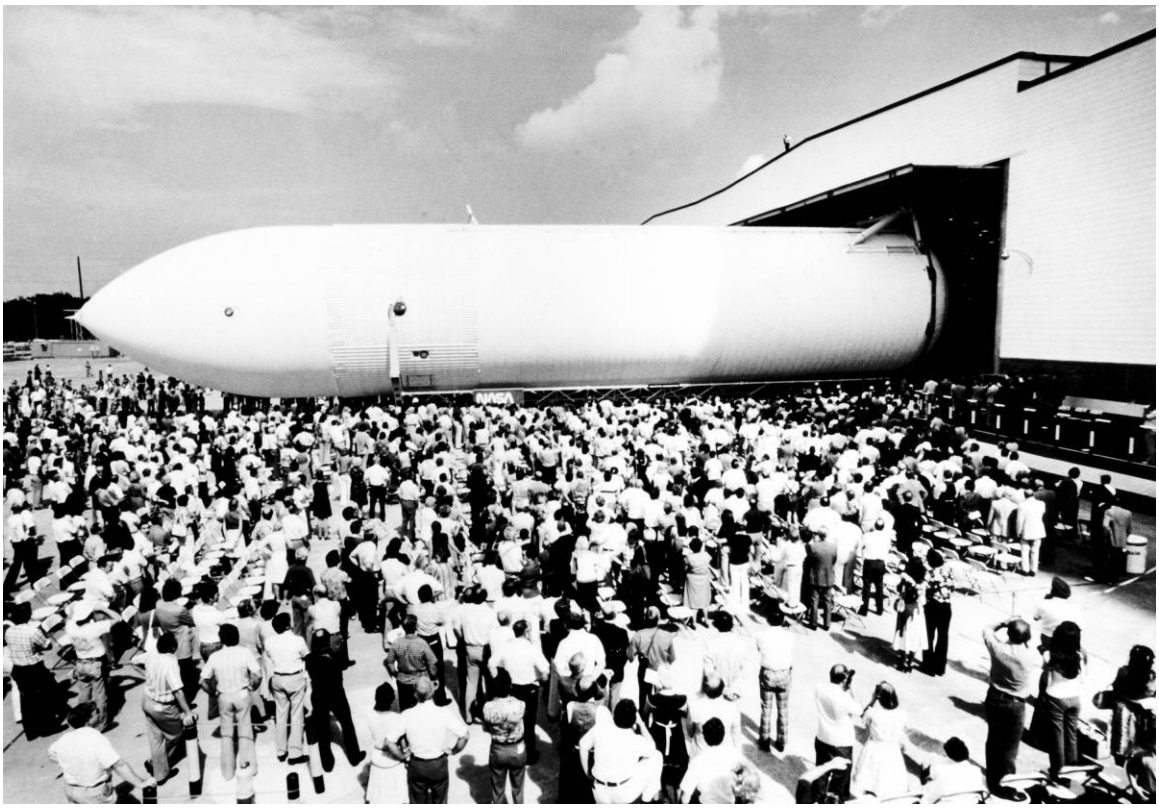

Figure D-3. Rollout of the first external tank, the MPTA, September 9, 1977. Source: NASA, Marshall Space Flight Center, MSFC-7889312, accessed at http://www.nix.ksc.nasa.gov.

Figure D-4. Installation of ET into the Dynamic Test Stand (Building 4550) at MSFC for Mated Vertical Ground Vibration Test, September 29, 1978.
Source: NASA, Marshall Space Flight Center, MSFC-7992267, accessed at http://www.nix.ksc.nasa.gov.

Figure D-5. A Standard Weight Tank (foreground) and a Lightweight Tank (rear) in final assembly at MAF, date unknown.
Source: NASA, Johnson Space Center, Imagery Online, jsc2010e009753.
.

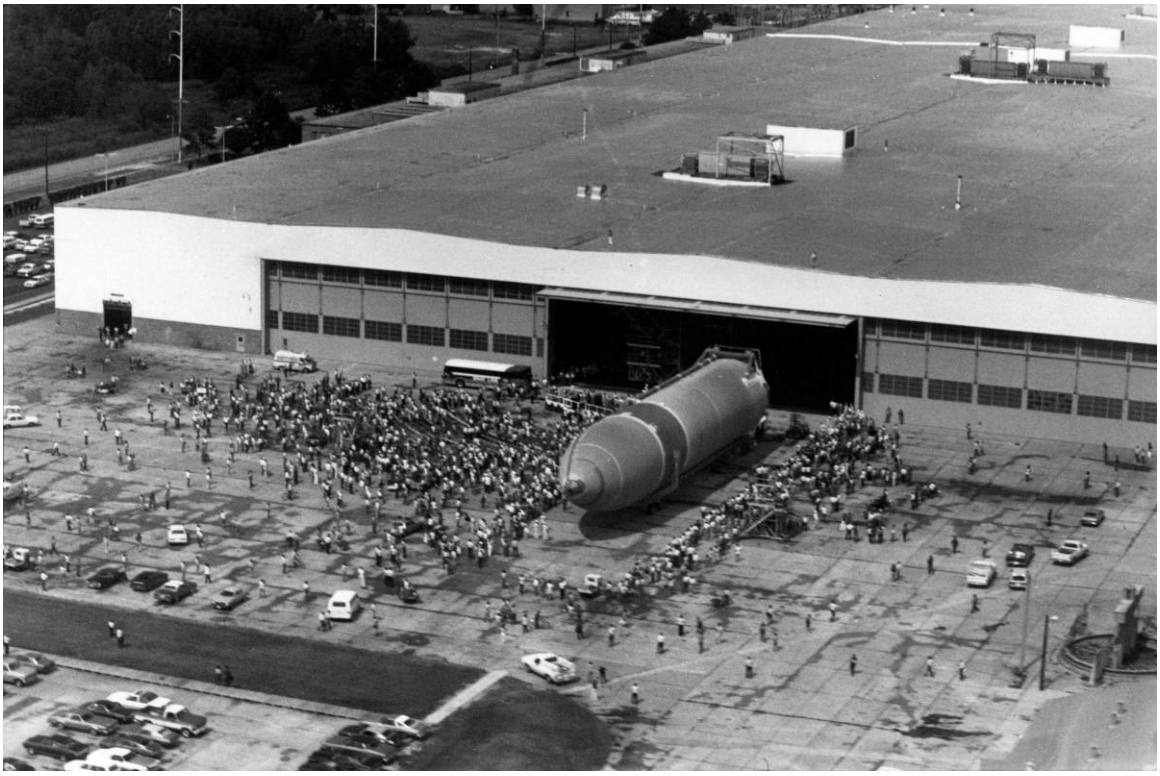

Figure D-6. First Lightweight Tank (ET-8) rolls out, September 10, 1982.
Source: NASA, Johnson Space Center, Imagery Online, jsc2010e009759.

Figure D-7. Lightweight Tanks (LWT) at MAF, July 1, 1983.
Source: NASA, Marshall Space Flight Center, MSFC-8336102, accessed at http://www.nix.ksc.nasa.gov.

Figure D-8. First Super Lightweight Tank (ET-96) rolls out, January 16, 1998.
Source: NASA, Johnson Space Center, Imagery Online, jsc2010e009775.

ET-138 begins its rollout to the Michoud harbor.

Figure D-9. The last of 136 tanks (ET-138) is rolled out at Michoud, July 8, 2010. Source: NASA, Marshall Space Flight Center, *Marshall Star*, July 15, 2010, 1.

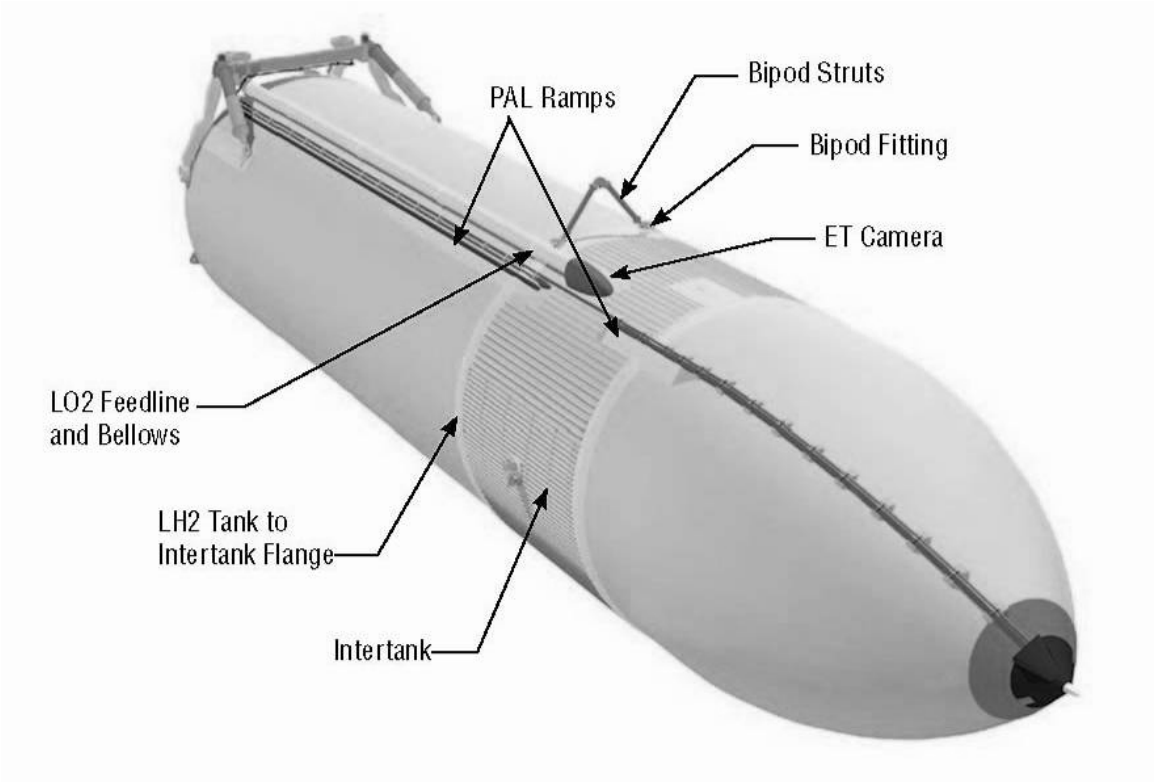

Figure D-10. Diagram showing improvements to the ET following the *Columbia* accident. Source: NASA, Marshall Space Flight Center, *NASA Facts: Improvements to the Space Shuttle's External Tank*, 1; accessed at http://www.nasa.gov/centers/marshall/pdf/119016main_Shuttle_ET_FS.pdf.

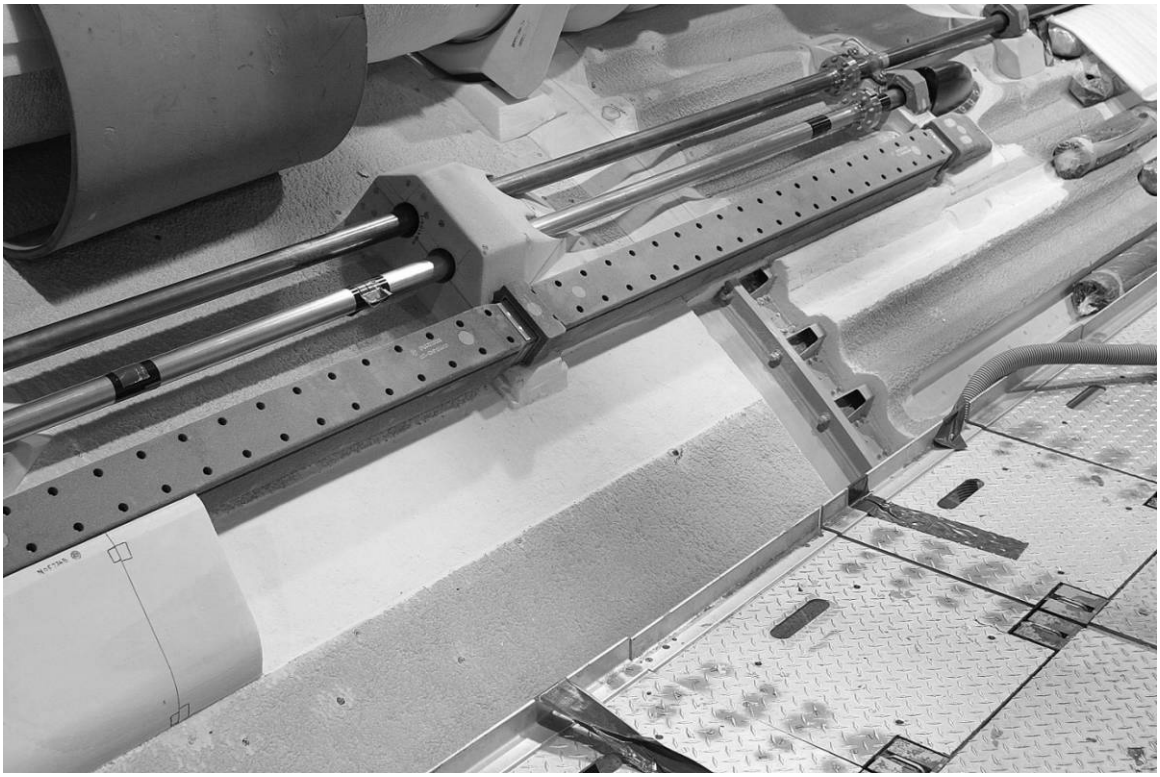

Figure D-11. PAL Ramp, August 12, 2004.
Source: NASA, Marshall Space Flight Center/Lockheed Martin, accessed at http://www.nasa.gov/centers/marshall/images/content/104631main_99600main_PAL_Ramp_8-12-04_3000x2000.jpg.

Figure D-12. Lockheed Martin technicians installing ice/frost ramps.
Source: NASA, *NASA Facts: Space Shuttle External Tank ET-128, STS-124*, 2; accessed at http://www.nasa.gov/centers/marshall/pdf/228641main_8-368946_%282%29.pdf.

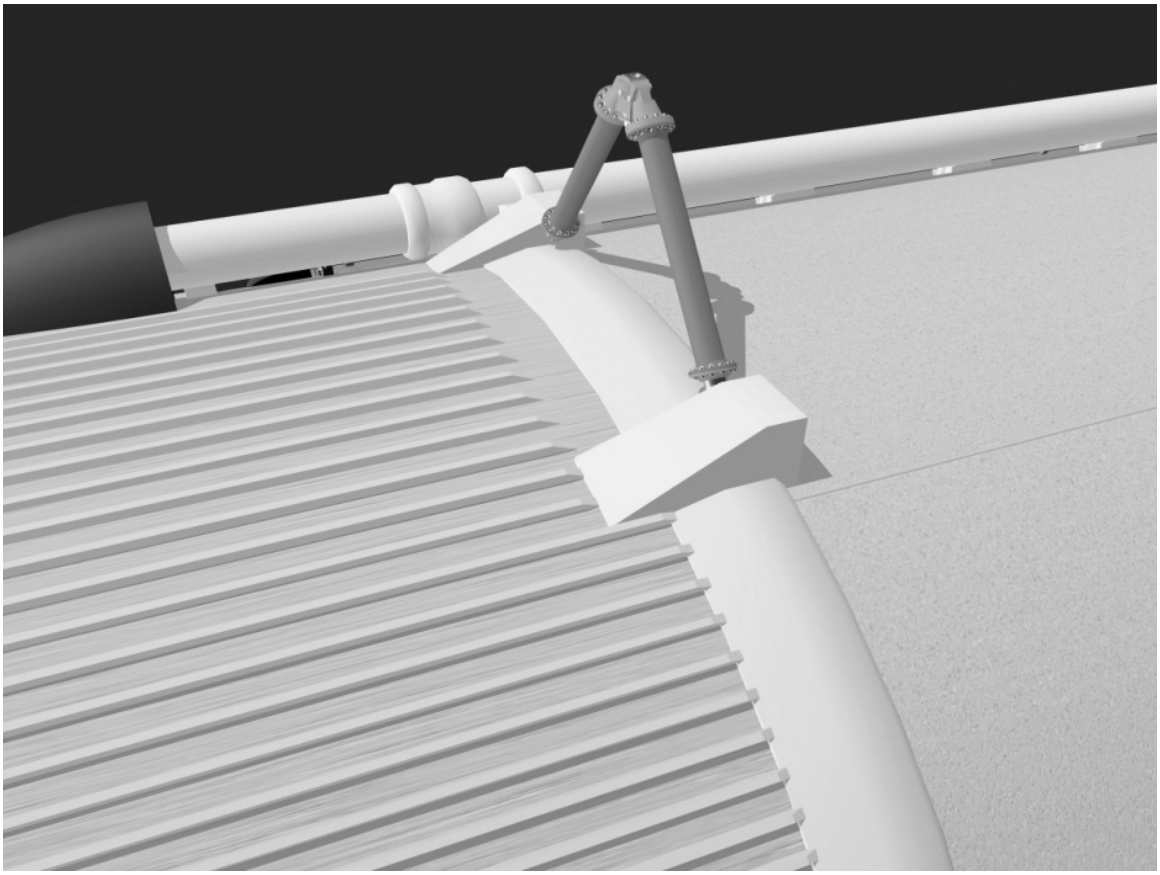

Figure D-13. Forward bipod fitting, pre-*Columbia* accident.
Source: NASA, Marshall Space Flight Center/Lockheed Martin, accessed at http://www.nasa.gov/centers/marshall/images/content/104648main_99505main_Bipod_Pre-Columbia_2400x1800.jpg

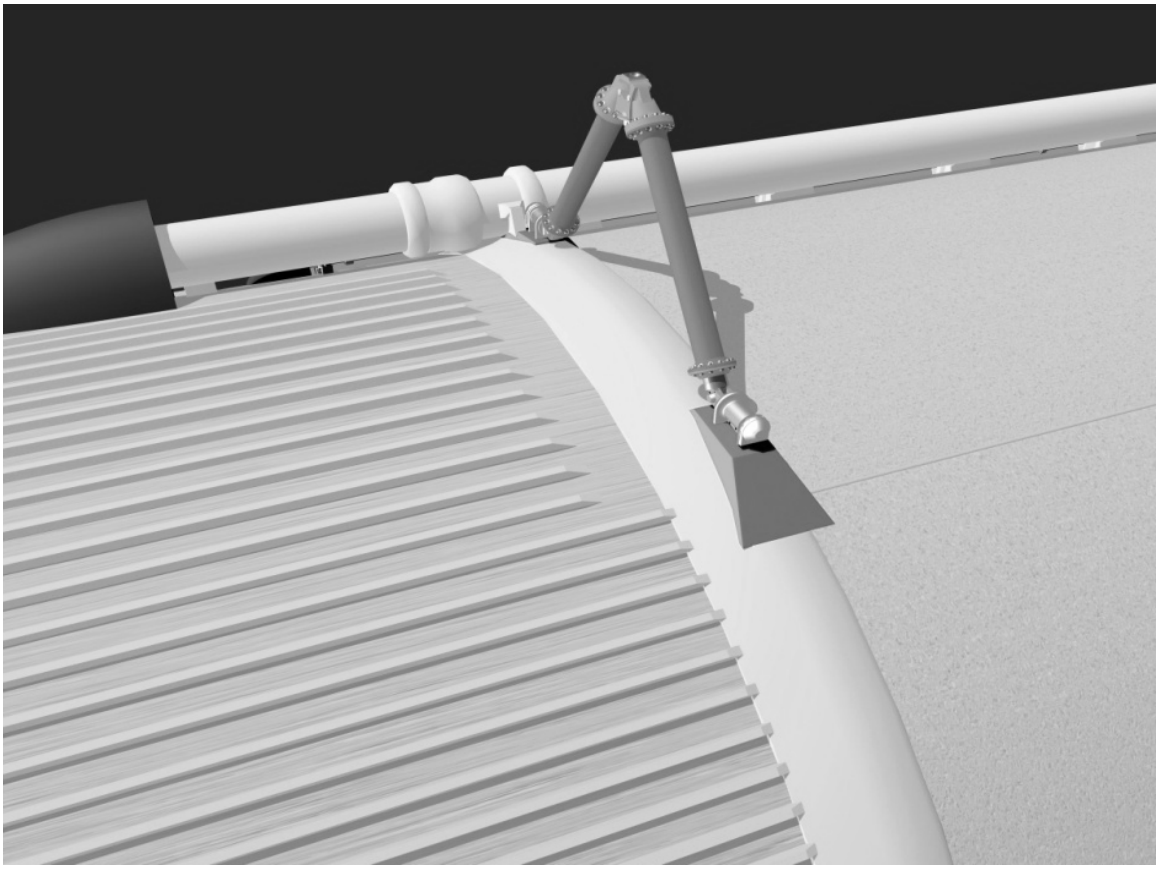

Figure D-14. Forward bipod redesign.
Source: NASA Marshall Space Flight Center/Lockheed Martin, accessed at http://www.nasa.gov/centers/marshall/images/content/104701main_99508main_Bipod_Redesign_2400x1800.jpg.

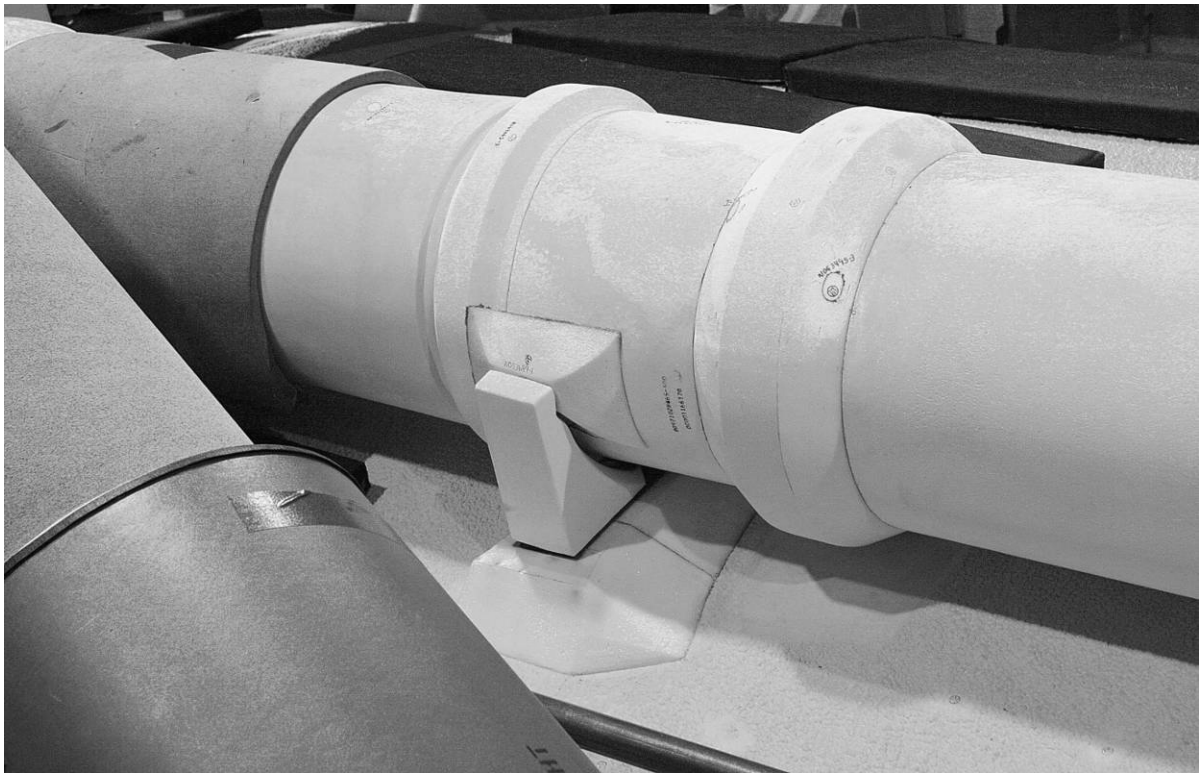

Figure D-15. Redesigned liquid oxygen feedline bellows, August 12, 2004.
Source: NASA, Marshall Space Flight Center/Lockheed Martin, accessed at http://www.nasa.gov/centers/marshall/images/content/104640main_99417main_Bellows_8-12-04_2400x1541.jpg.

Figure D-16. A technician working on an ECO connector.
Source: NASA, *NASA Facts: Engine Cutoff Sensor System*, 2; accessed at http://www.nasa.gov/pdf/210230main_ECO_Sensor_System_Fact_Sheet.pdf.

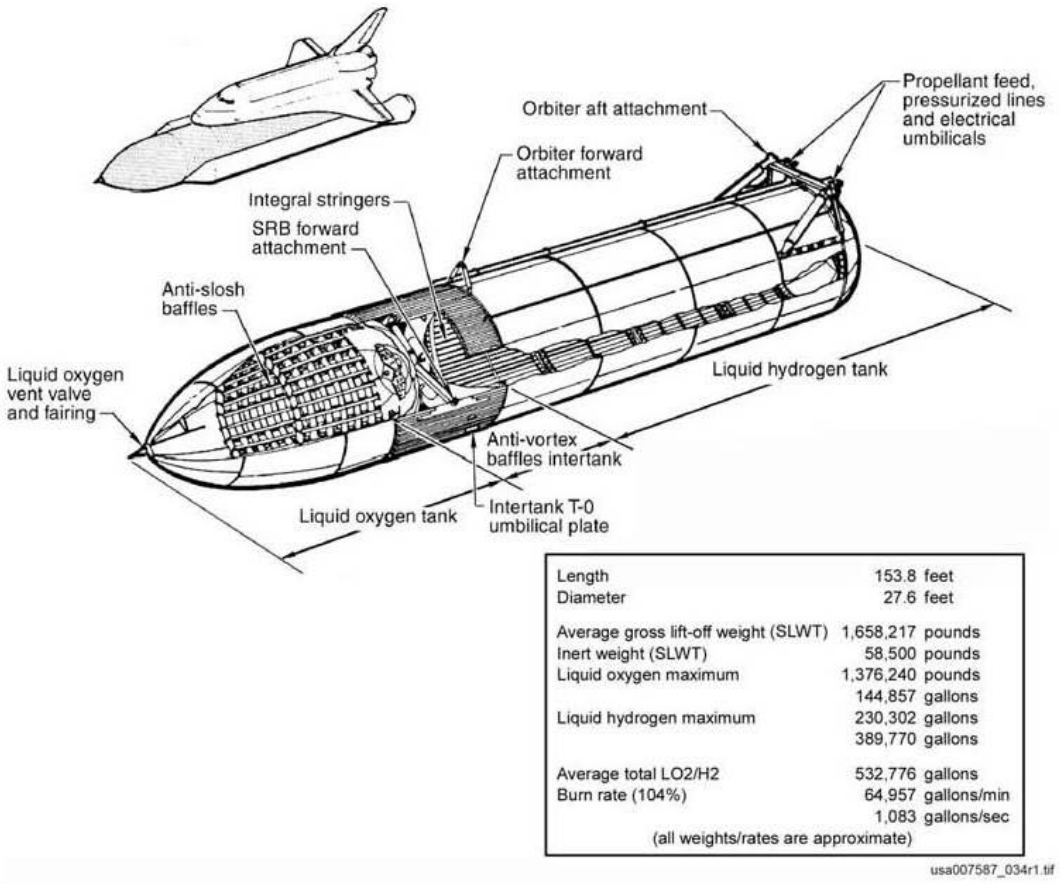

Length	153.8	feet
Diameter	27.6	feet
Average gross lift-off weight (SLWT)	1,658,217	pounds
Inert weight (SLWT)	58,500	pounds
Liquid oxygen maximum	1,376,240	pounds
	144,857	gallons
Liquid hydrogen maximum	230,302	gallons
	389,770	gallons
Average total LO2/H2	532,776	gallons
Burn rate (104%)	64,957	gallons/min
	1,083	gallons/sec

(all weights/rates are approximate)

Figure D-17. Diagram of the Super Lightweight Tank.
Source: USA, *Shuttle Crew Operation Manual*, 1.3-1.

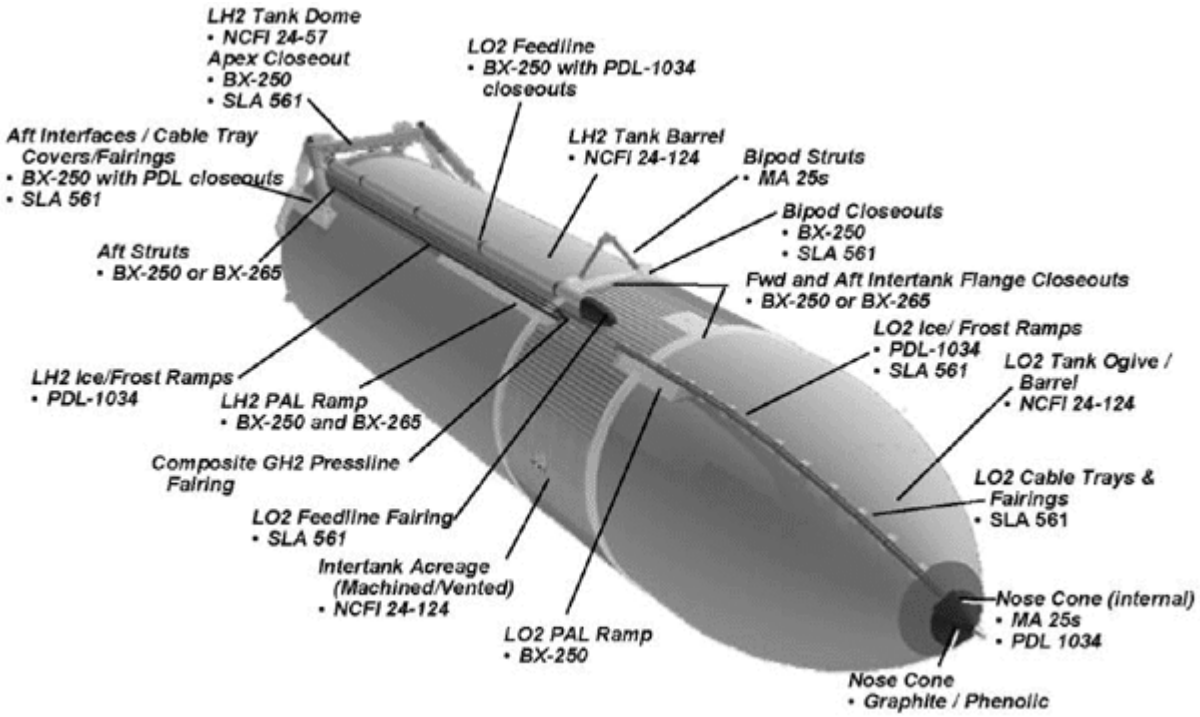

Figure D-18. Diagram of the External Tank.
Source: NASA, Marshall Space Flight Center, accessed at
http://maf.msfc.nasa.gov/et_overview.html

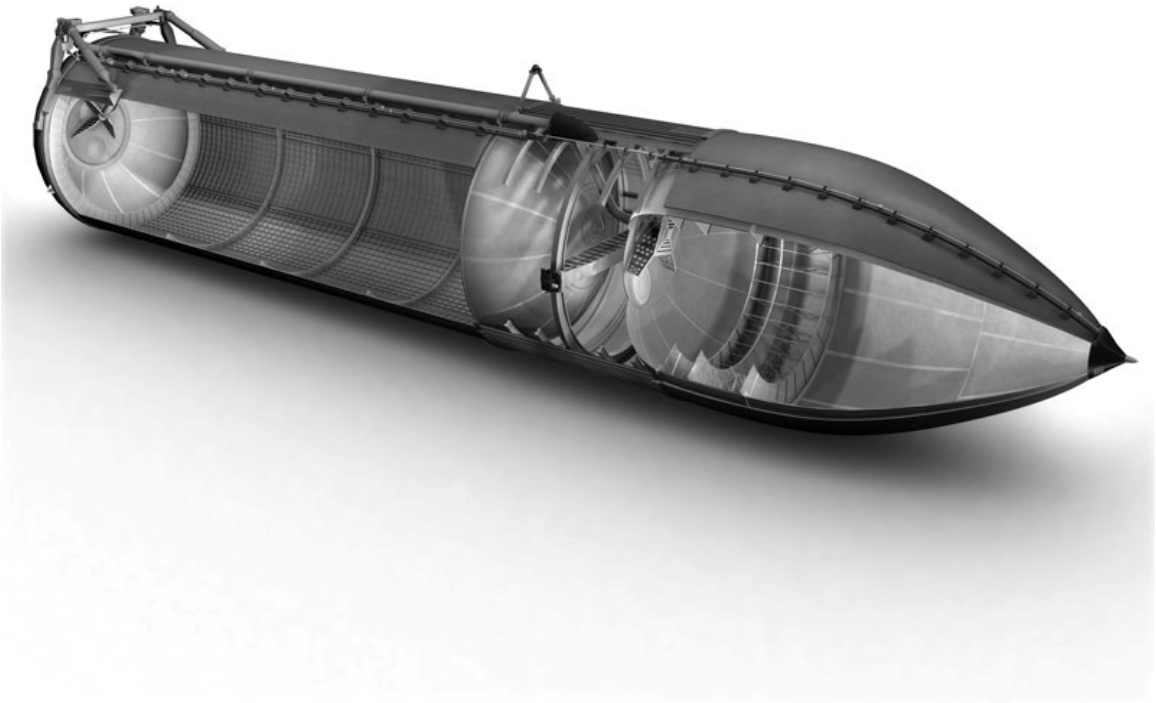

Figure D-19. Cutaway view of the External Tank.
Source: NASA, Johnson Space Center, Imagery Online, jsc2010e009729.

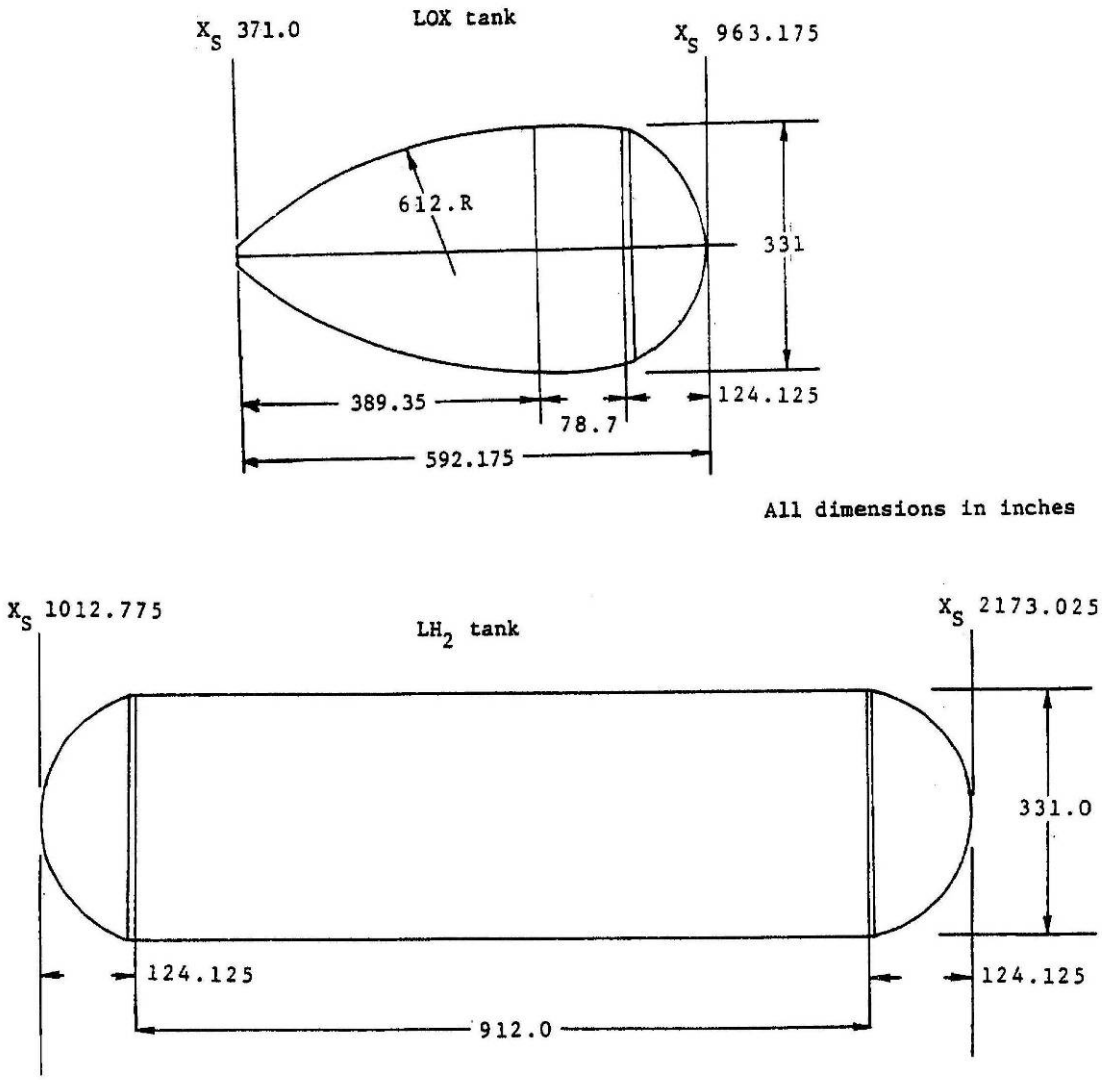

Figure D-20. General dimensions of the ET LO2 (LOX) and LH2 tanks.
Source: NASA, *Shuttle Operational Data Book*, Volume 1, Figure 4.4-2.

Figure D-21. The liquid oxygen tank for ET-138 at MAF, May 19, 2009.
Source: NASA, Johnson Space Center, Imagery Online, jsc2010e009667.

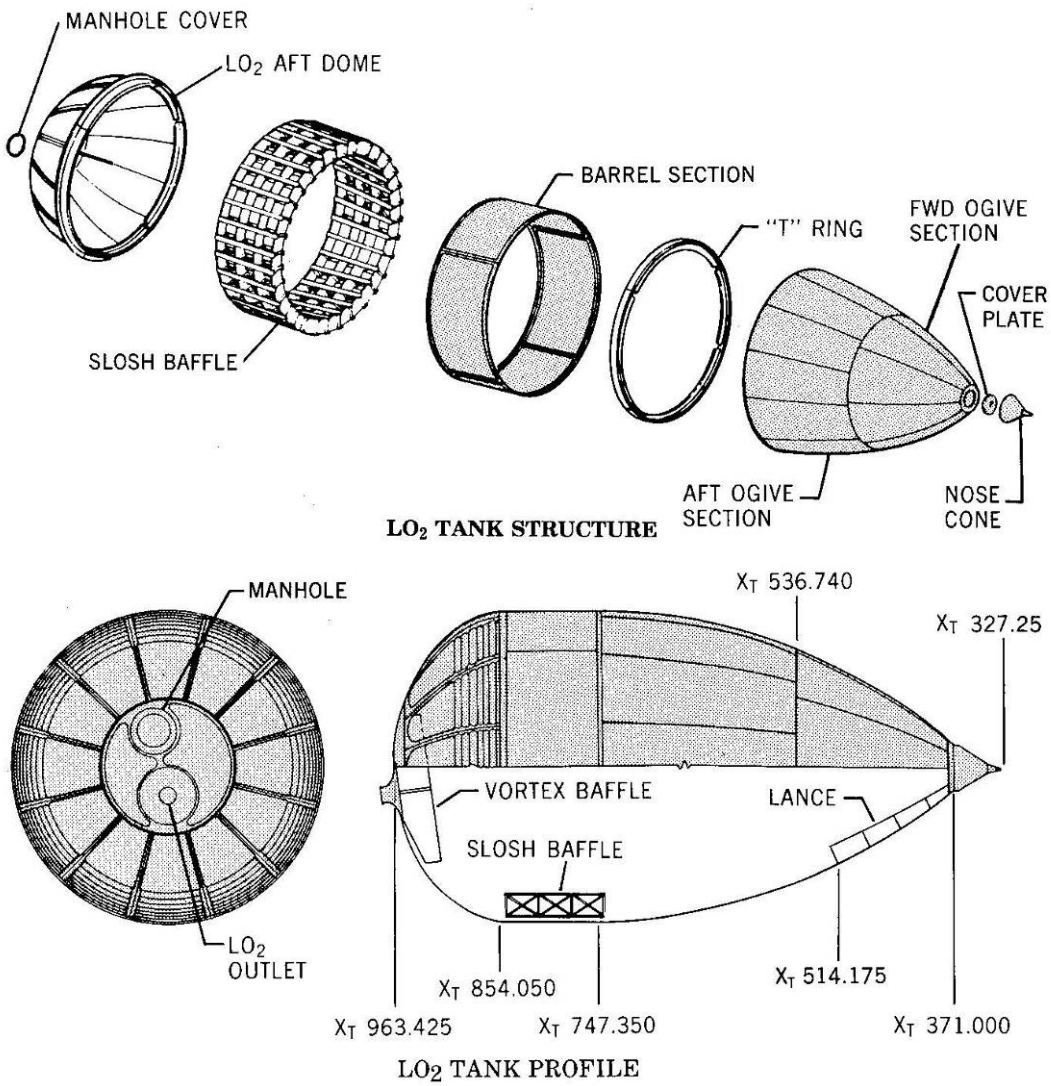

Figure D-22. Diagram of the liquid oxygen tank.
Source: Martin Marietta, *Space Shuttle External Tank. System Definition Handbook*, Volume I, VI-2.

Figure D-23. View of the intertank for ET-138.
Source: NASA, Johnson Space Center, Imagery Online, jsc2010e009713.

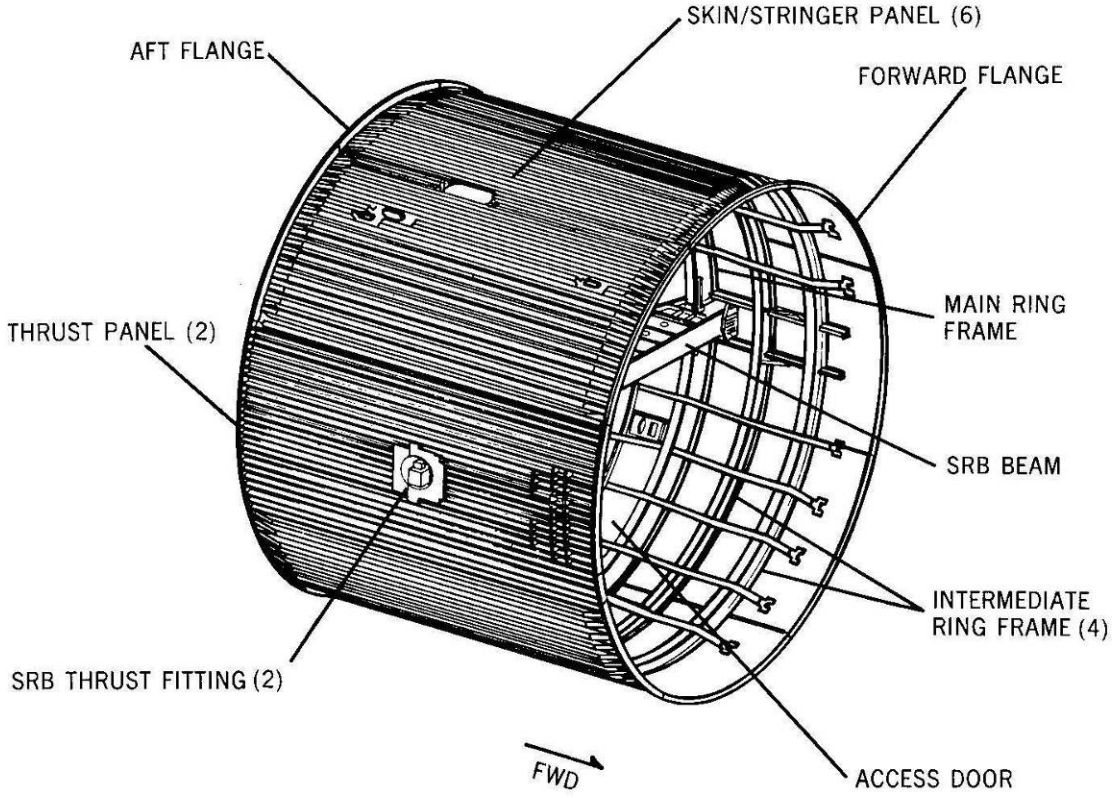

Figure D-24. Diagram of the intertank.
Source: Martin Marietta, *Space Shuttle External Tank. System Definition Handbook*, Volume I, VII-2.

Figure D-25. The liquid hydrogen tank for ET-138 at MAF, May 30, 2009.
Source: NASA, Johnson Space Center, Imagery Online, jsc2010e009748.

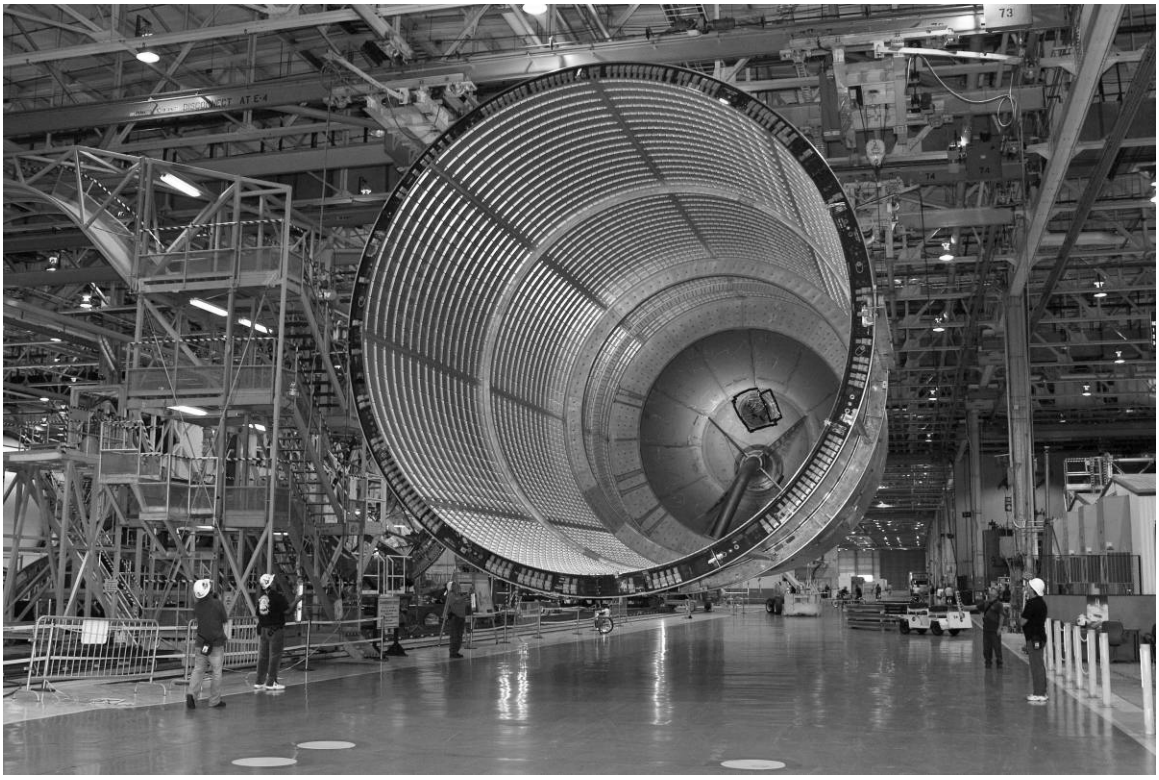

Figure D-26. The interior of a liquid hydrogen tank during assembly at MAF, August 28, 2008.
Source: NASA, Johnson Space Center, Imagery Online, jsc2010e009742.

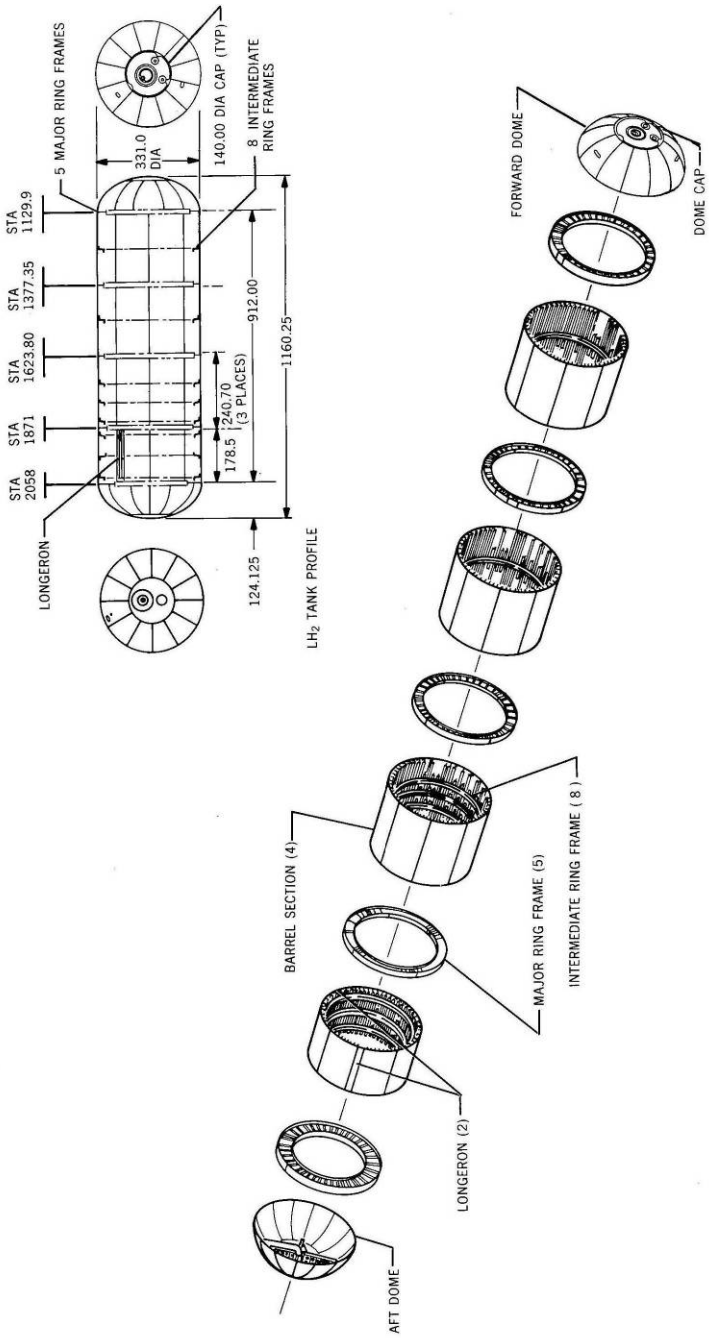

Figure D-27. Diagram of the liquid hydrogen tank.
Source: Martin Marietta, *Space Shuttle External Tank. System Definition Handbook*, Volume I, VIII-3/VIII-4.

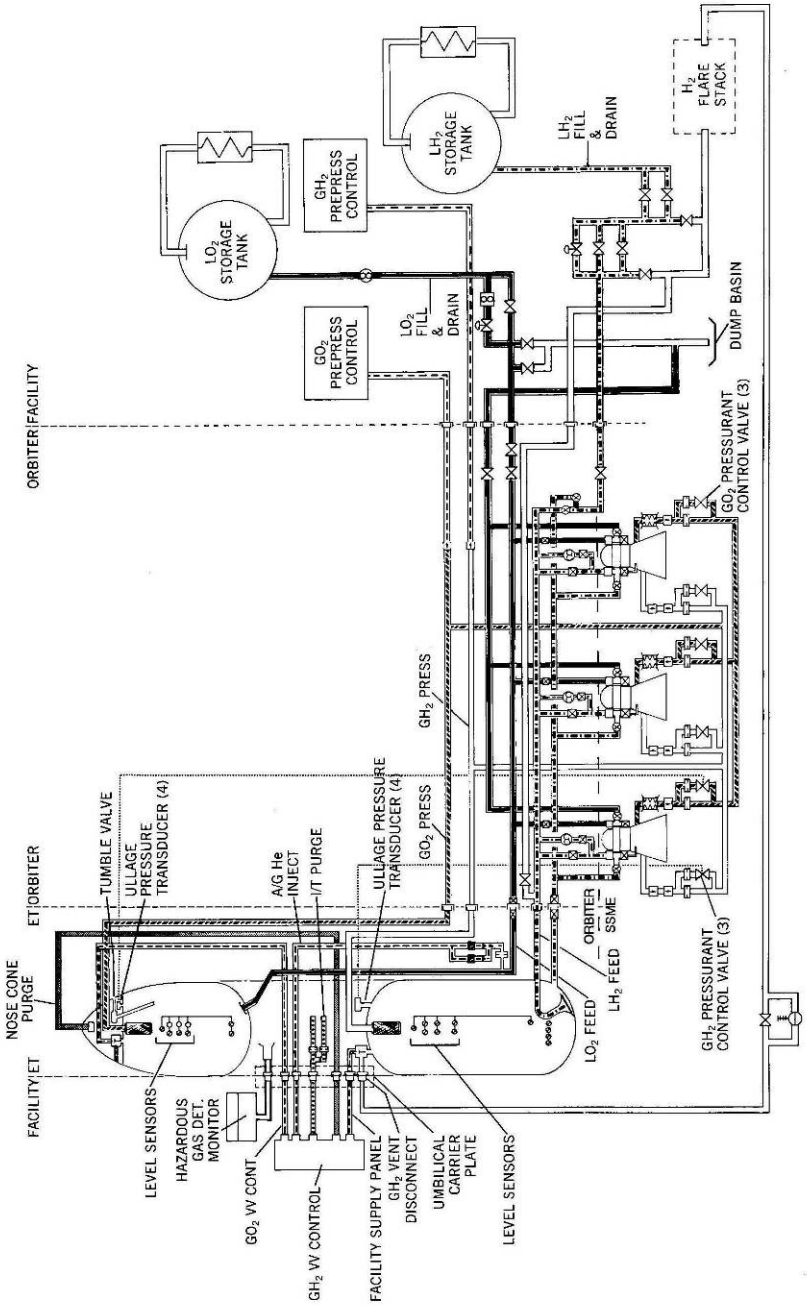

Figure D-28. Schematic of the main propulsion system.
Source: Martin Marietta, *Space Shuttle External Tank. System Definition Handbook*, Volume I, IX-7/IX-8.

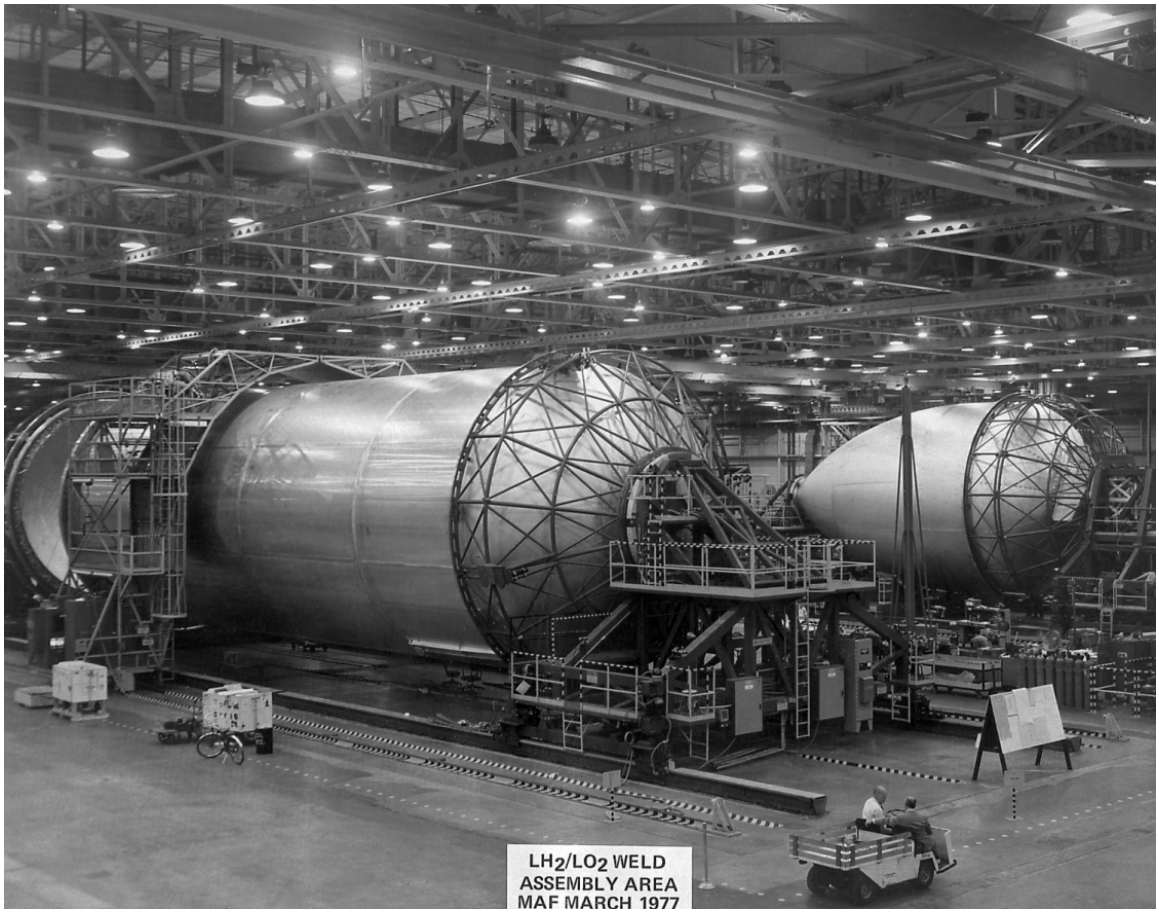

Figure D-29. Liquid hydrogen tank and liquid oxygen tank for the ET being assembled in the weld assembly area of MAF, March 1, 1977.
Source: NASA, Marshall Space Flight Center, MSFC-7777894, accessed at http://www.nix.ksc.nasa.gov

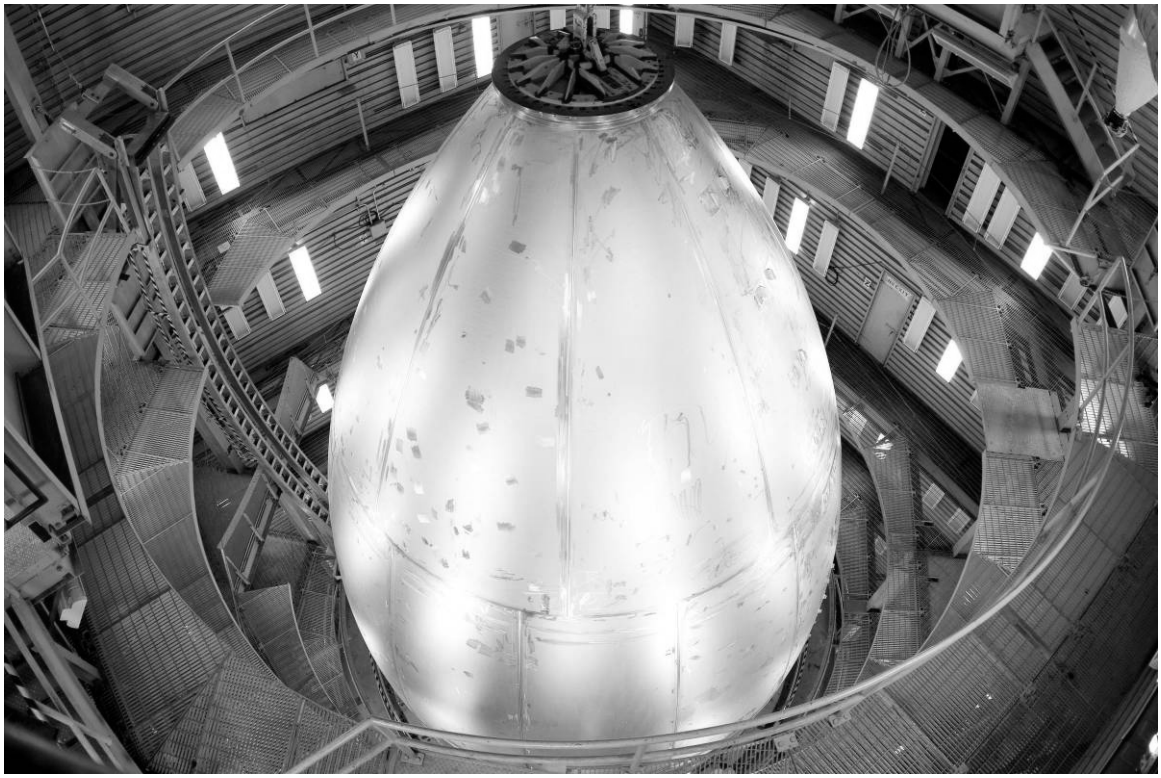

Figure D-30. The LO2 tank for ET-138 leaves proof testing cell at MAF, May 31, 2009.
Source: NASA, Johnson Space Center, Imagery Online, jsc2010e009664.

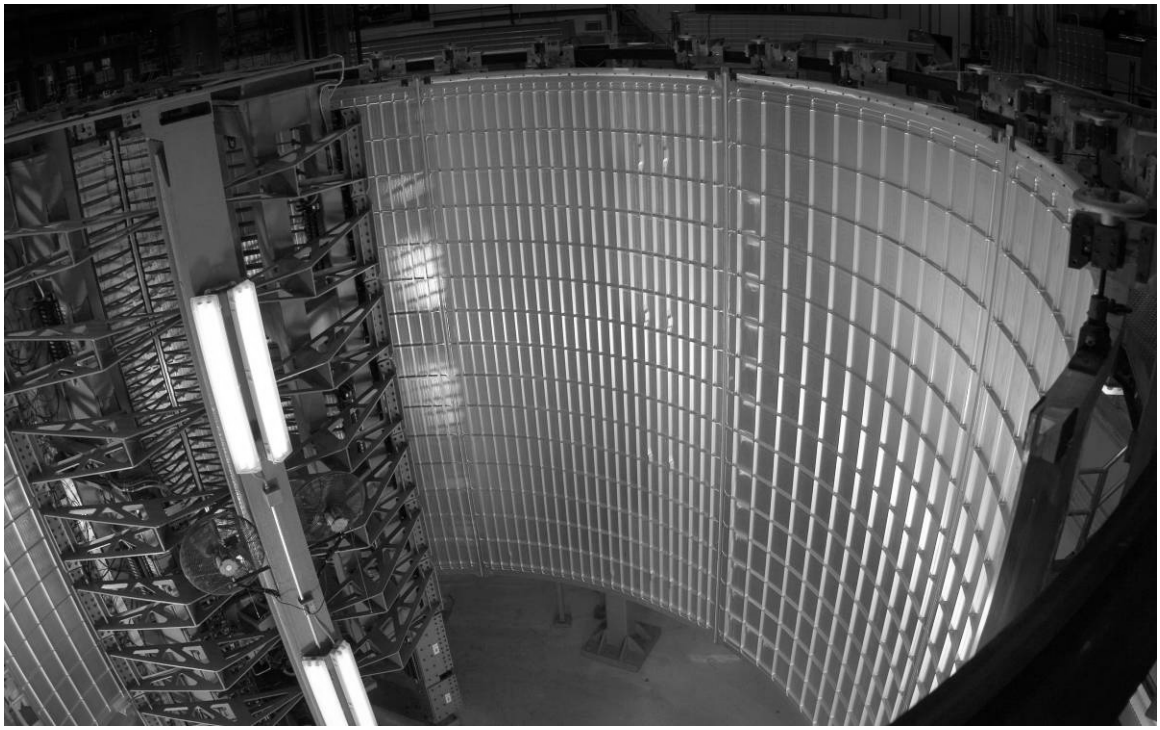

Figure D-31. Friction stir welding of LH2 barrel panels at MAF, August 28, 2008.
Source: NASA, Johnson Space Center, Imagery Online, jsc2010e009645.

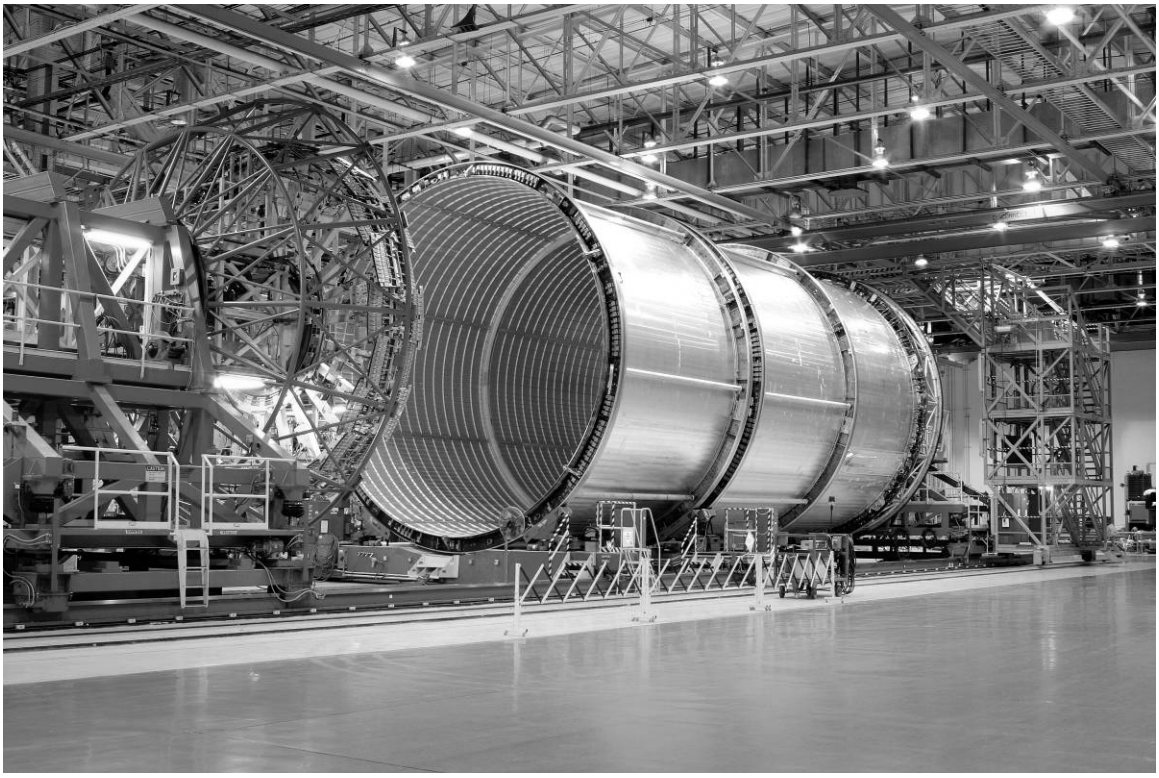

Figure D-32. LH2 tank on the 5068 weld tool at MAF, unknown date.
Source: NASA, Johnson Space Center, Imagery Online, jsc2010e009754.

Figure D-33. LO2/intertank combination for ET-138 in Cell H at MAF, November 12, 2009.
Source: NASA, Johnson Space Center, Imagery Online, jsc2010e009722.

Figure D-34. LO2/intertank combination being moved to Cell A at MAF for stacking on top of the LH2 tank to complete ET-133, February 4, 2009.
Source: NASA, Johnson Space Center, Imagery Online, jsc2010e009741.

Figure D-35. ET-122 in Test & Checkout Building, October 7, 2009.
Source: http://www.lockheedmartin.com/data/assets/ssc/michoud/PhotoGallery/ET-122-4-hi.gif.

Figure D-36. ET-1 ready to be rolled into barge for 900-mile journey to KSC, June 29, 1979.
Source: NASA, Johnson Space Center, Imagery Online, jsc2010e009727

Figure D-37. The barge *Pegasus* carrying ET-121 being towed by SRB retrieval ship *Freedom Star*, March 9, 2005.
Source: NASA, Kennedy Space Center, KSC-05PD-0376, accessed at http://www.nix.ksc.nasa.gov.

Figure D-38. The fist Super Lightweight Tank is transported to KSC's VAB, February 6, 1998. Source: NASA, Kennedy Space Center, KSC-98PC-0272, accessed at http://www.nix.ksc.nasa.gov.

Figure D-39. ET-135 being offloaded at KSC's Barge Terminal Facility near the VAB, January 5, 2010.
Source: NASA Kennedy Space Center, KSC-2010-1001, accessed at http://mediaarchive.ksc.nasa.gov.

Figure D-40. ET-135 being towed on its transporter to the VAB, January 5, 2010. Source: NASA Kennedy Space Center, KSC-2010-1003, accessed at http://mediaarchive.ksc.nasa.gov.

Figure D-41. ET-135 being rotated to vertical in KSC's VAB for placement into a test cell, January 6, 2010.
Source: NASA Kennedy Space Center, KSC-2010-1063, accessed at http://mediaarchive.ksc.nasa.gov.

Figure D-42. The ET for STS-114 being lifted from a test cell in KSC's VAB for mating, February 28, 2005.
Source: NASA Kennedy Space Center, KSC-05PD-0343, accessed at http://mediaarchive.ksc.nasa.gov.

Figure D-43. ET-29 being lowered between the SRBs in KSC's VAB for mating, August 28, 2008.
Source: NASA Kennedy Space Center, KSC-08PD-2525, accessed at http://mediaarchive.ksc.nasa.gov.

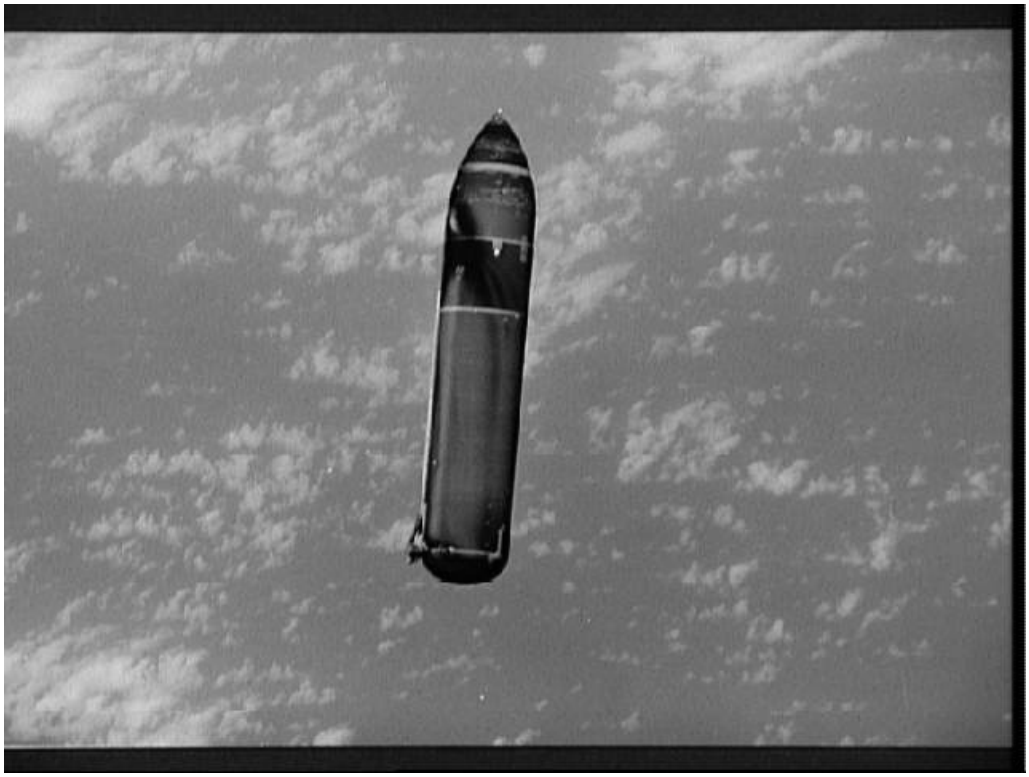

Figure D-44. *Discovery's* external fuel tank seen after being jettisoned, September 12, 1993. Source: NASA, Johnson Space Center, STS051-22-008, accessed at http://www.nix.ksc.nasa.gov.

Appendix E-SRB/RSRM Figures

Figure No. E-1. SRB Development Motor-1 (DM-1) in test stand at Morton Thiokol facility at Wasatch, Utah, July 18, 1977.
Source: NASA Johnson Space Center, Image Repository, S77-27676.

Figure No. E-2. SRB Qualification Motor-1 (QM-1) in test stand at Morton Thiokol facility at Wasatch, Utah, July 13, 1979.
Source: NASA Marshall Space Flight Center, MSFC-7997301, accessed at http://nix.ksc.nasa.gov/.

Figure No. E-3. Test firing of Development Motor-8 (DM-8) in test stand at Morton Thiokol's Wasatch, Utah, facility, August 27, 1987.
Source: NASA Marshall Space Flight Center, MSFC-8780135, accessed at http://nix.ksc.nasa.gov/.

Figure No. E-4. Flight Support Motor (FSM)-17 test, February 25, 2010, at ATK in Promontory, Utah. This was the last RSRM test of the Space Shuttle program.
Source: NASA, accessed at http://www.nasa.gov/images/content/429987main_179307_002.jpg.

Figure No. E-5. Solid rocket booster drop tests at the Long Beach Naval Shipyard, California, 1973.
Source: NASA Marshall Space Flight Center, MSFC-7038201, accessed at http://nix.ksc.nasa.gov/.

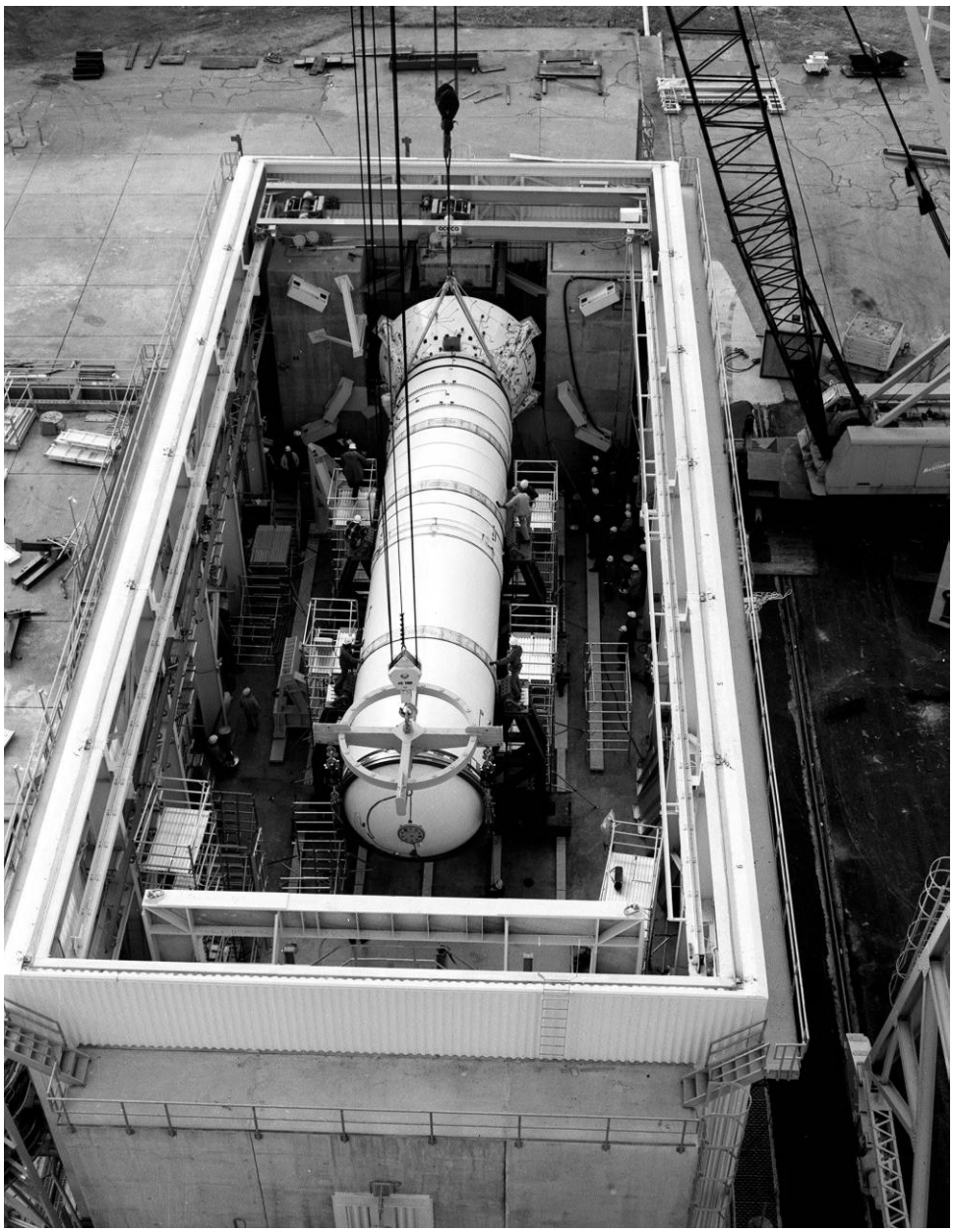

Figure No. E-6. Solid Rocket Booster Structural Test Article being installed at test facility at MSFC, December 1, 1977.
Source: NASA Marshall Space Flight Center, MSFC-7885404, accessed at http://nix.ksc.nasa.gov/.

Figure No. E-7. Solid Rocket Booster Structural Test Article at MSFC, November 1, 1978. Source: NASA Marshall Space Flight Center, MSFC-7884999, accessed at http://nix.ksc.nasa.gov/.

Figure No. E-8. Space Shuttle Solid Rocket Booster Drop Test Vehicle (SRB-DTV) first release from NB-52B, August 13, 1977.
Source: NASA Dryden Flight Research Center, EC77-8184, accessed at http://www.dfrc.nasa.gov/Gallery/Photo/B-52/HTML/EC77-8184.html.

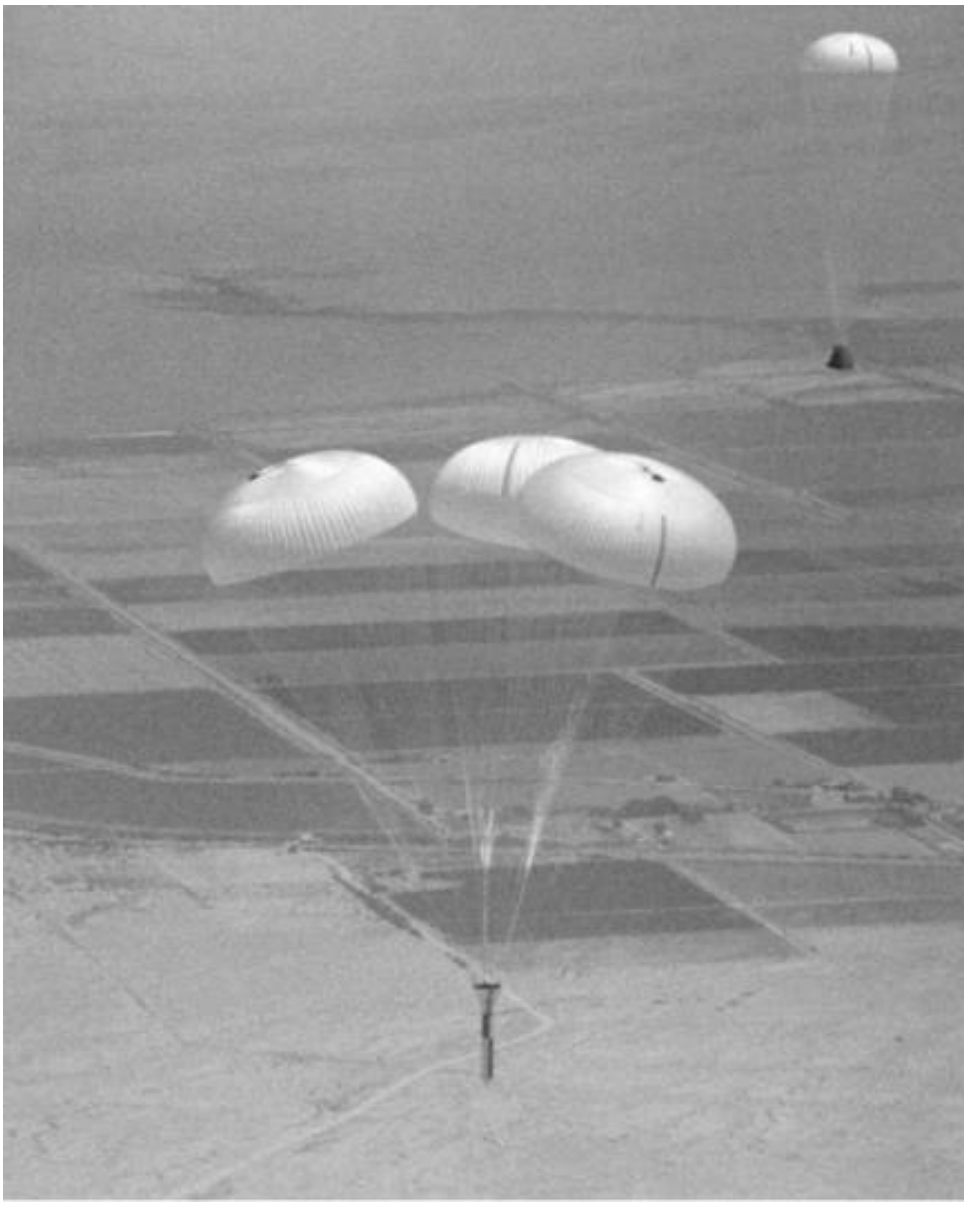

Figure No. E-9. Space Shuttle Solid Rocket Booster Drop Test Vehicle (SRB-DTV) with chutes open after release from NB-52B, January 29, 1979.
Source: NASA Dryden Flight Research Center, NASA Photo: EC79-10168, accessed at http://www.dfrc.nasa.gov/Gallery/Photo/index.html.

Figure No. E-10. Space Shuttle SRB separation motor test firing at Test Stand 116 at MSFC, March 28, 2007.
Source: NASA Marshall Space Flight Center, MSFC-0700508, accessed at http://nix.ksc.nasa.gov/.

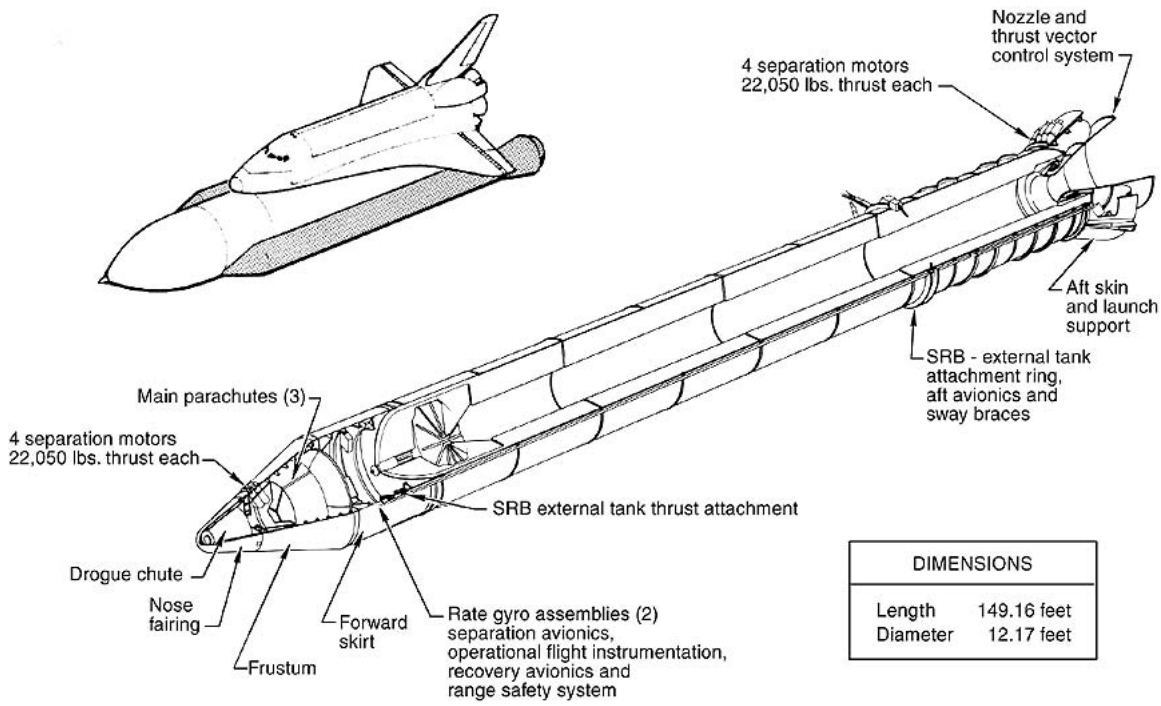

Figure No. E-11. Solid Rocket Booster, general information.
Source: USA, *Shuttle Crew Operation Manual*, 1.4-1.

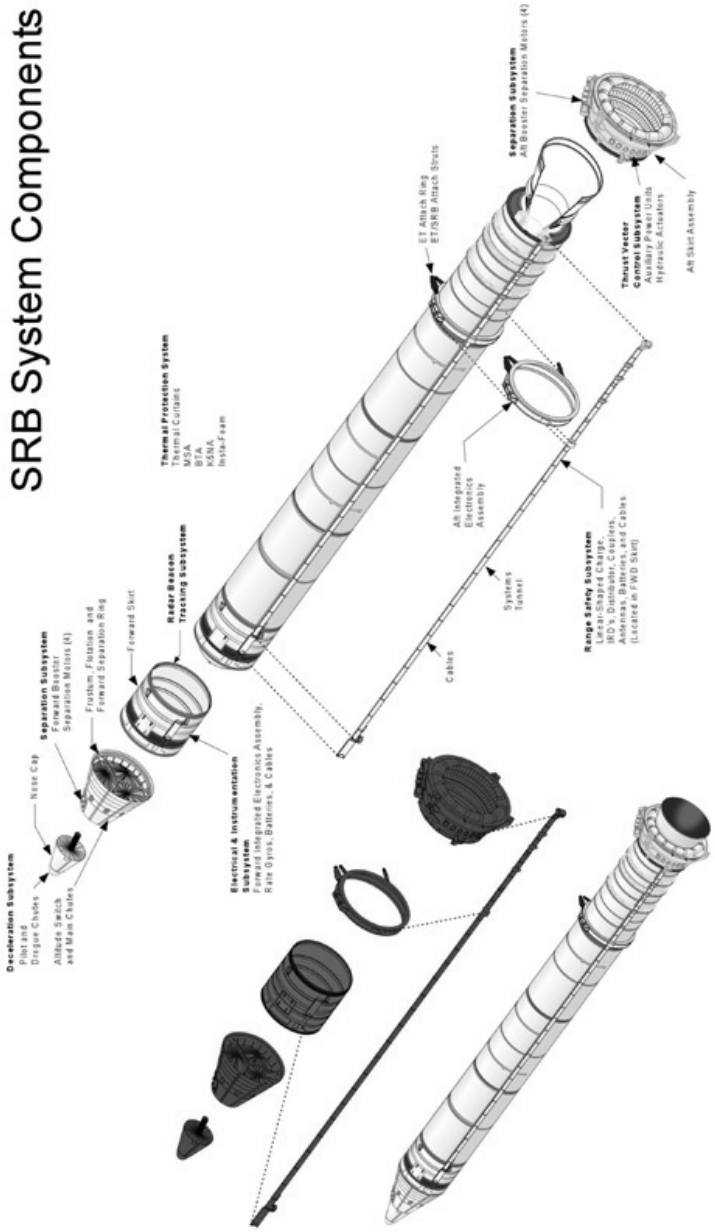

Figure No. E-12. SRB System Components.
Source: USA, *Solid Rocket Booster Illustrated Systems Manual*, 6.

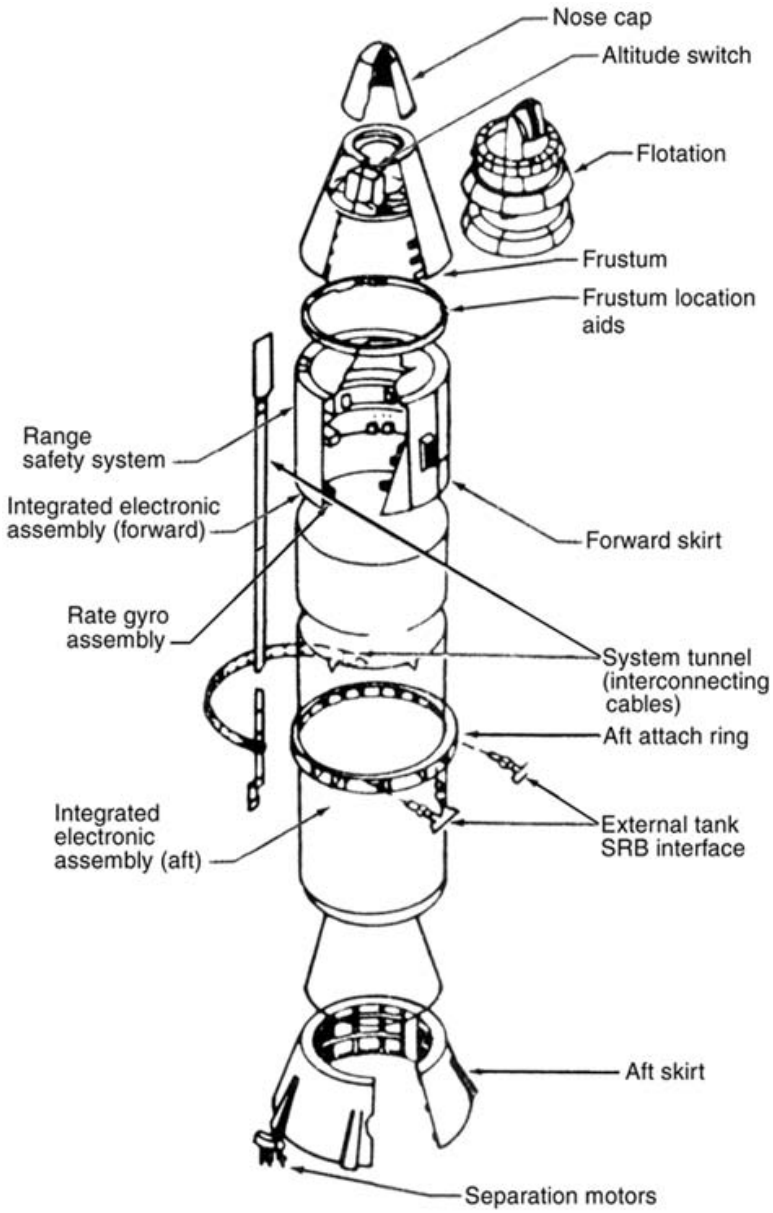

Figure No. E-13. SRB Exploded View.
Source: USA, *Shuttle Crew Operation Manual*, 1.4-4.

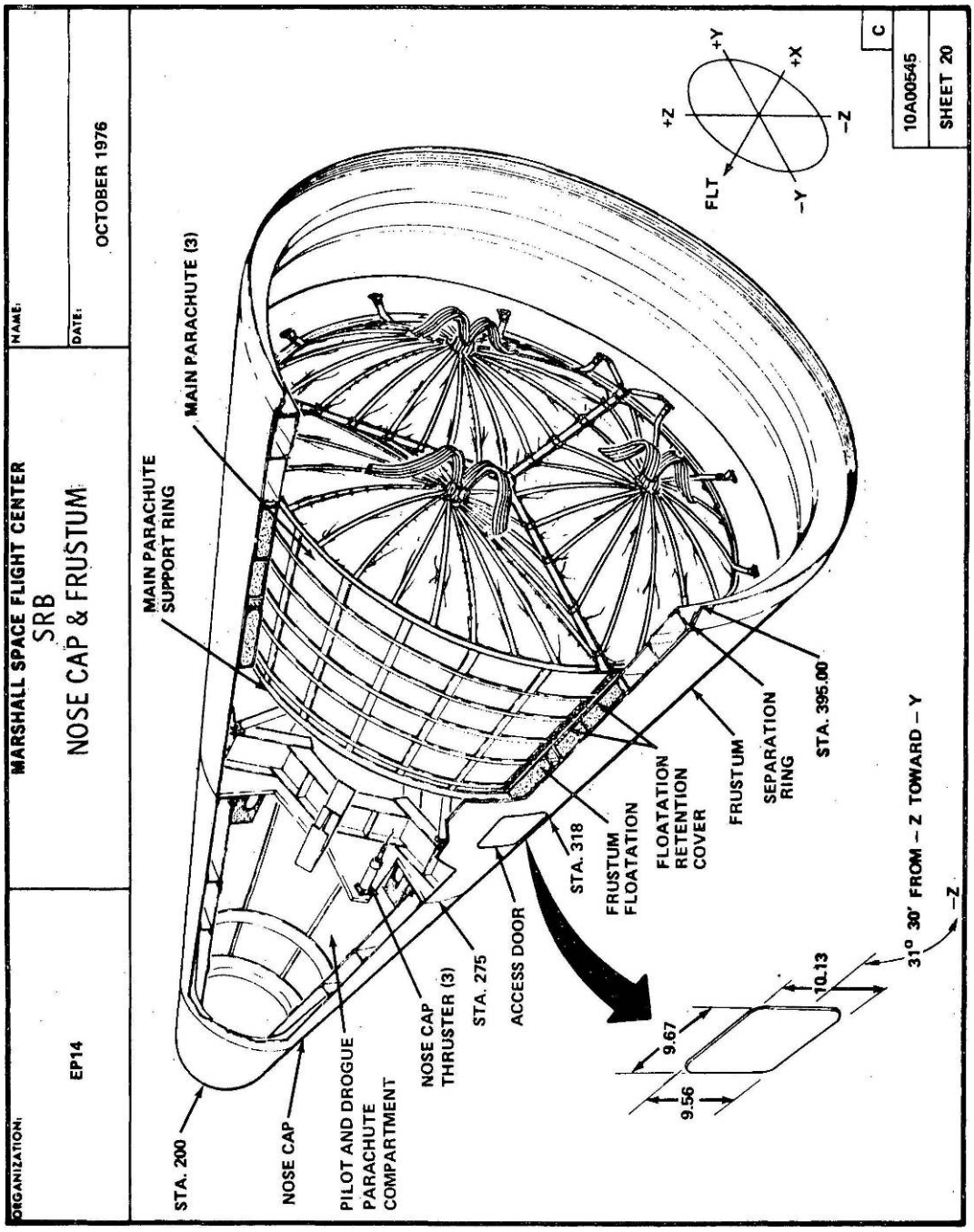

Figure No. E-14. Diagram of SRB nose cap and frustum.
Source: Griner, et al., *Space Shuttle Solid Rocket Booster Pictorial Representations*, sheet 20.

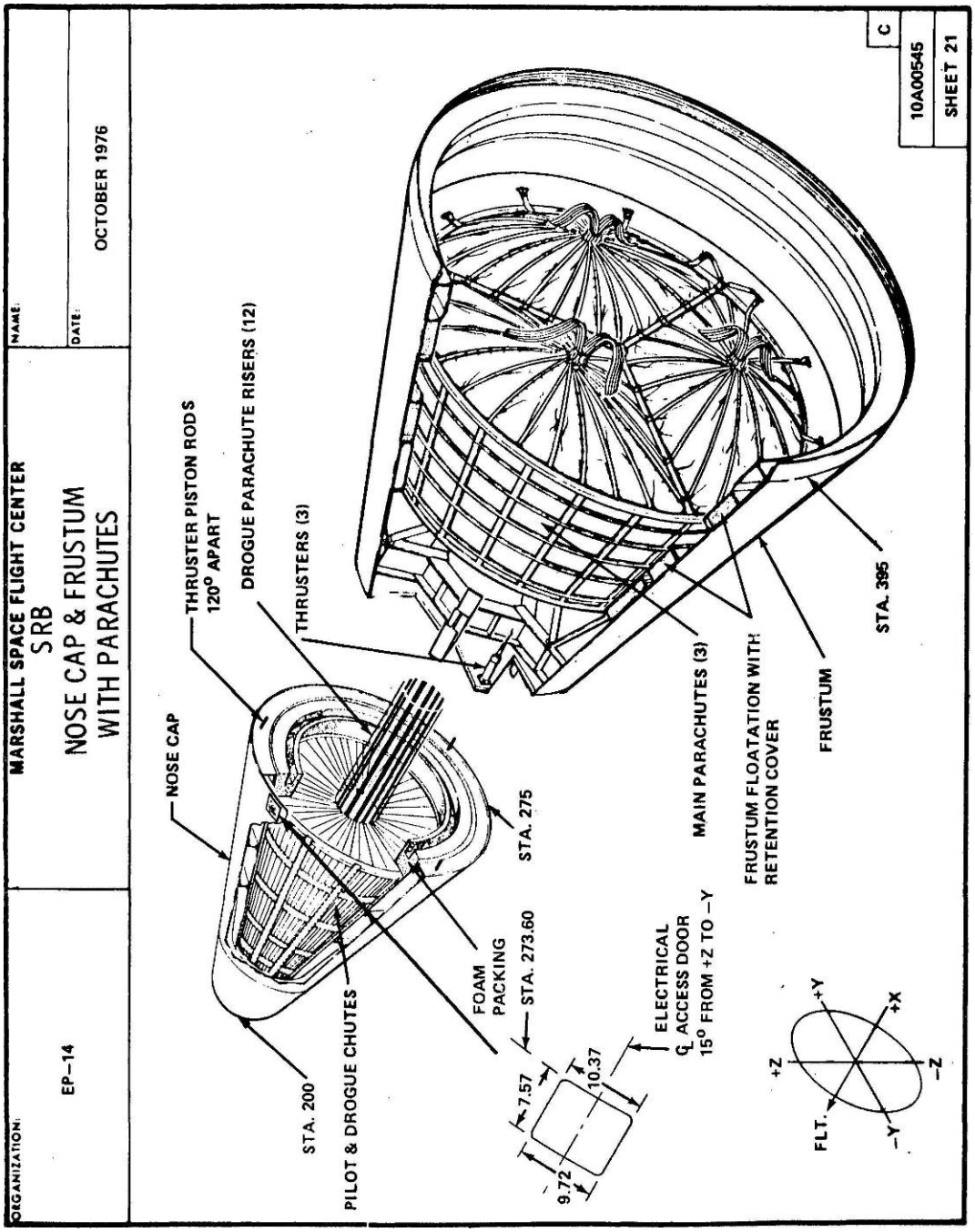

Figure No. E-15. Diagram of SRB nose cap (with parachute) and frustum.
Source: Griner, et al., *Space Shuttle Solid Rocket Booster Pictorial Representations*, sheet 21.

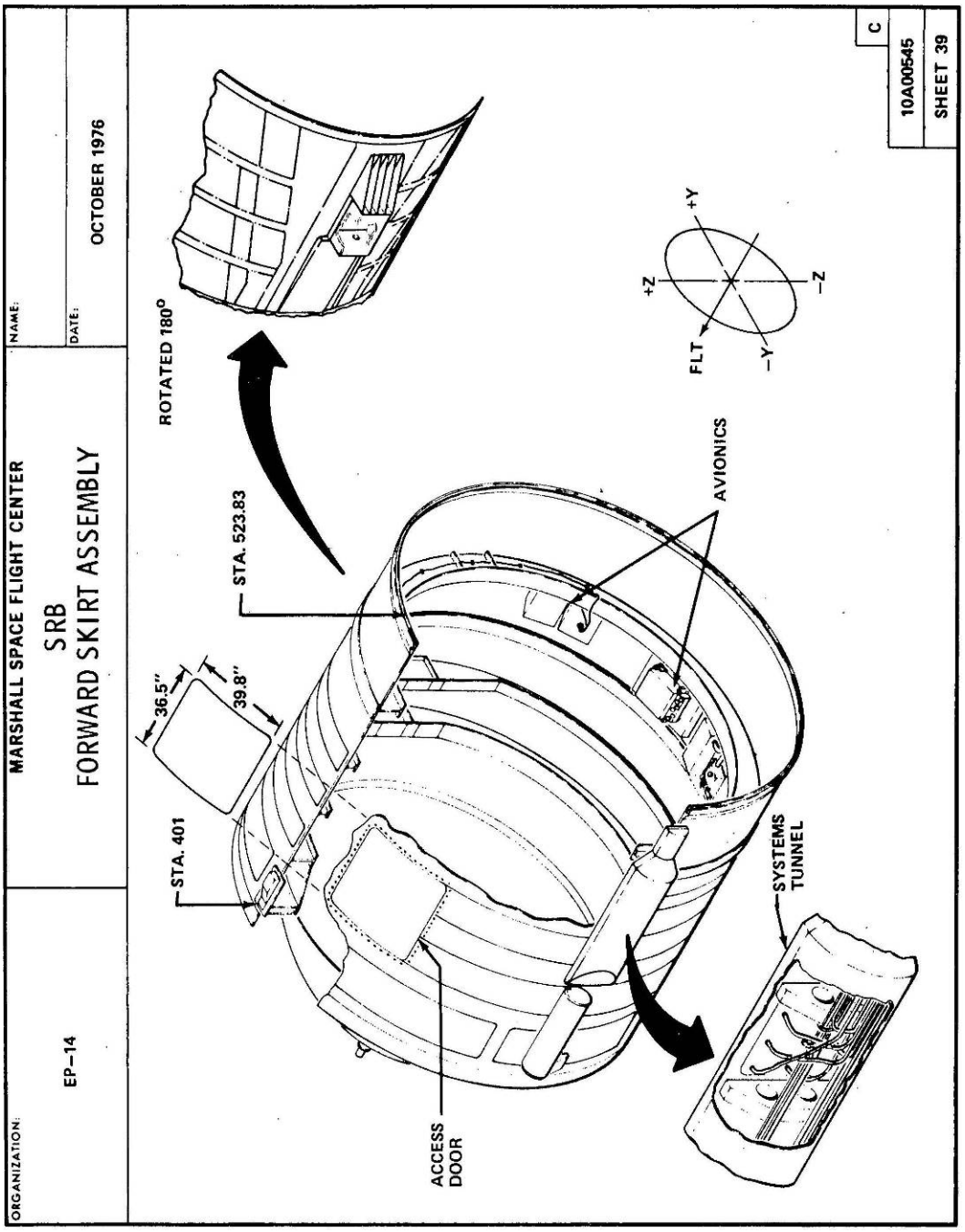

Figure No. E-16. Diagram of SRB forward skirt.
Source: Griner, et al., *Space Shuttle Solid Rocket Booster Pictorial Representations*, sheet 39.

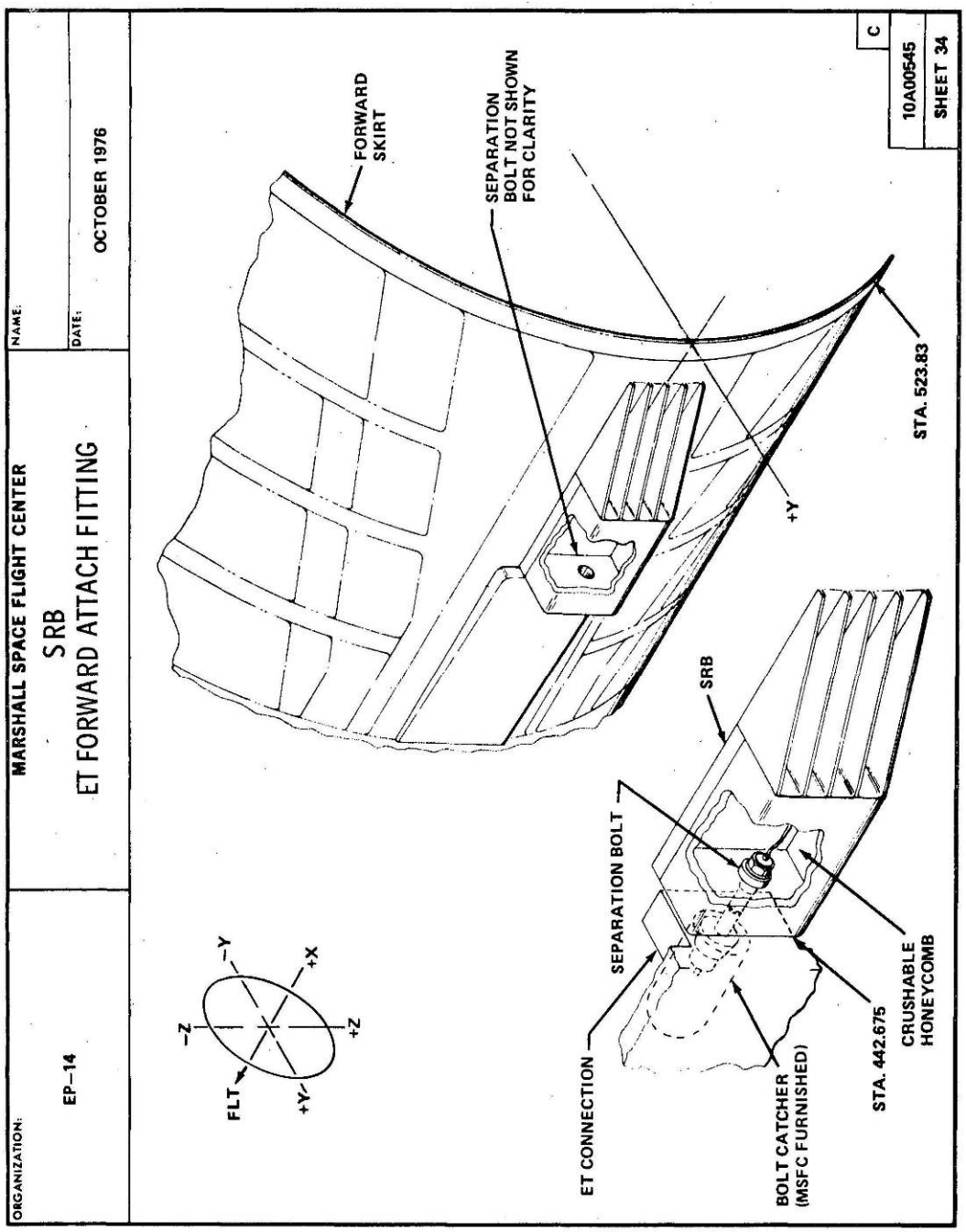

Figure No. E-17. Diagram of SRB/ET forward attach fitting.
Source: Griner, et al., *Space Shuttle Solid Rocket Booster Pictorial Representations*, sheet 34.

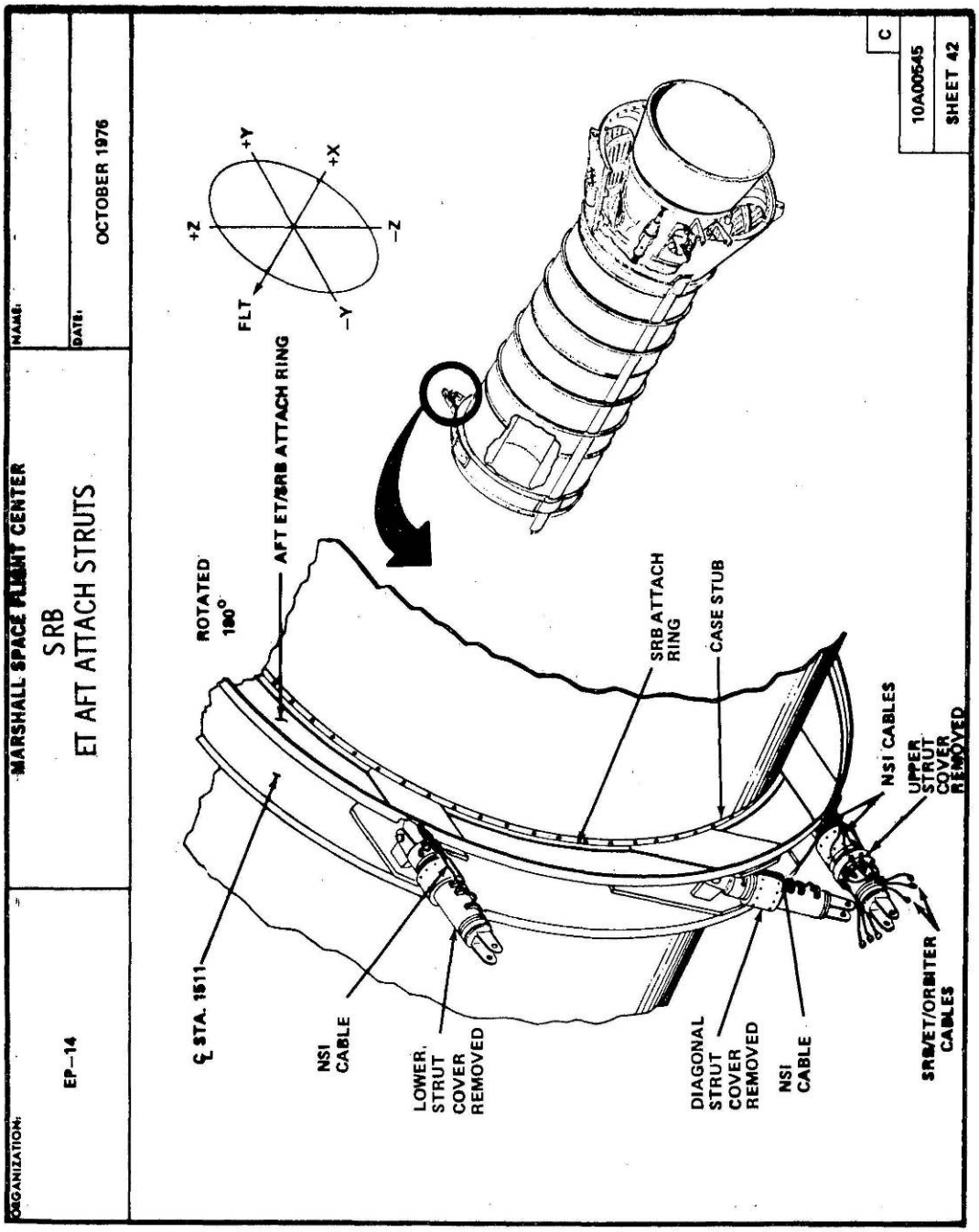

Figure No. E-18. Diagram of SRB/ET aft attach struts.
Source: Griner, et al., *Space Shuttle Solid Rocket Booster Pictorial Representations*, sheet 42.

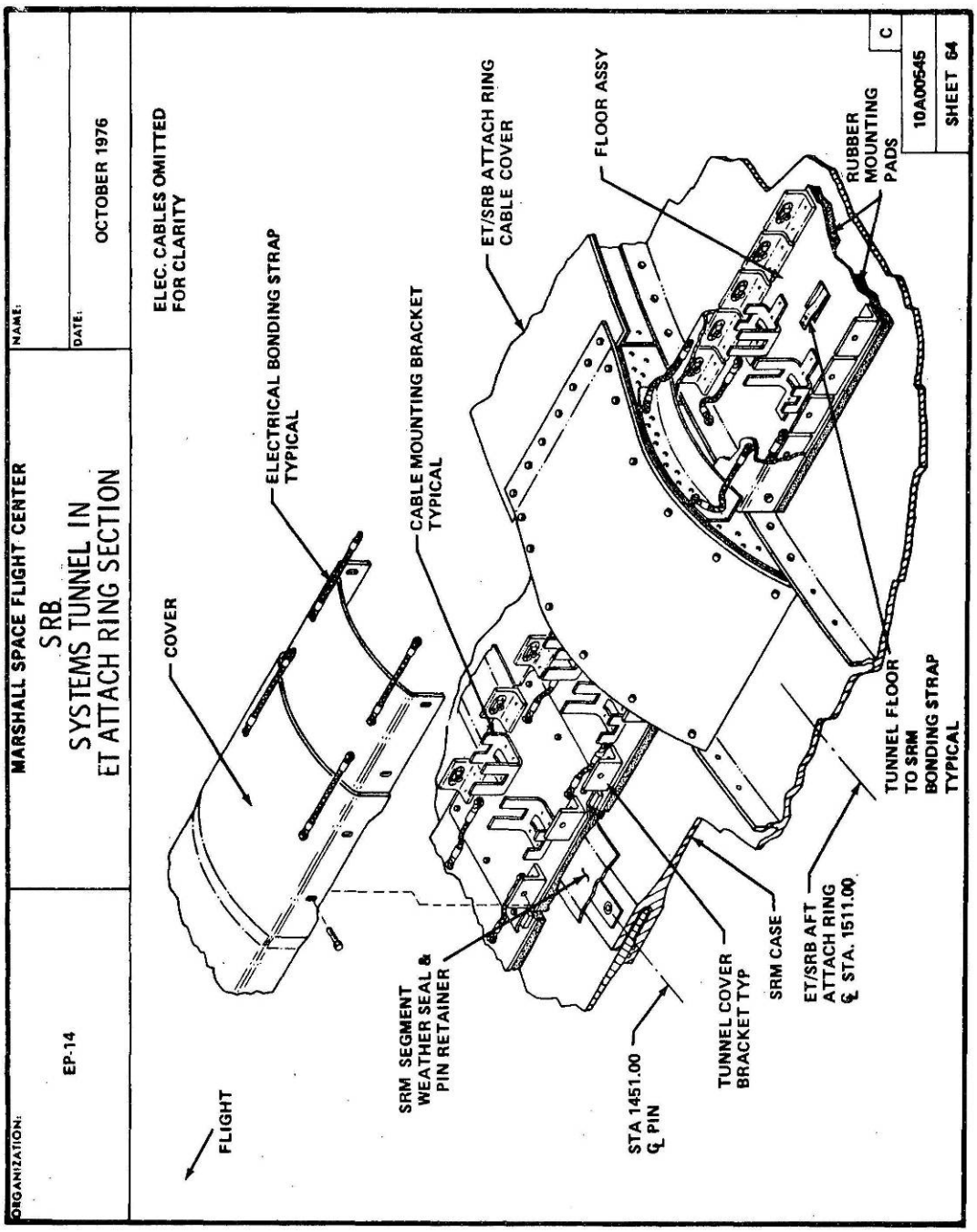

Figure No. E-19. Diagram of a portion of SRB systems tunnel.
Source: Griner, et al., *Space Shuttle Solid Rocket Booster Pictorial Representations*, sheet 64.

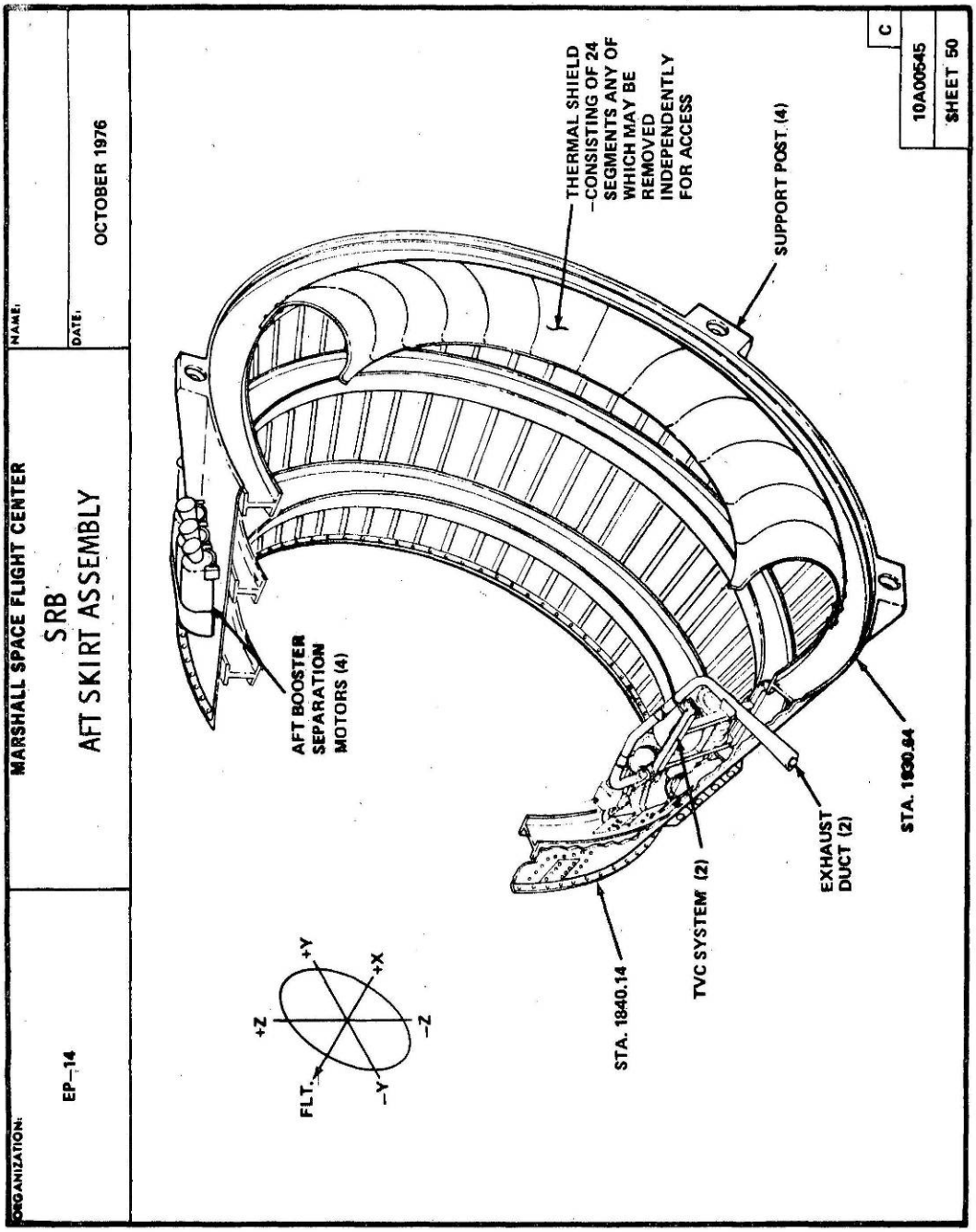

Figure No. E-20. Diagram of SRB aft skirt.
Source: Griner, et al., *Space Shuttle Solid Rocket Booster Pictorial Representations*, sheet 50.

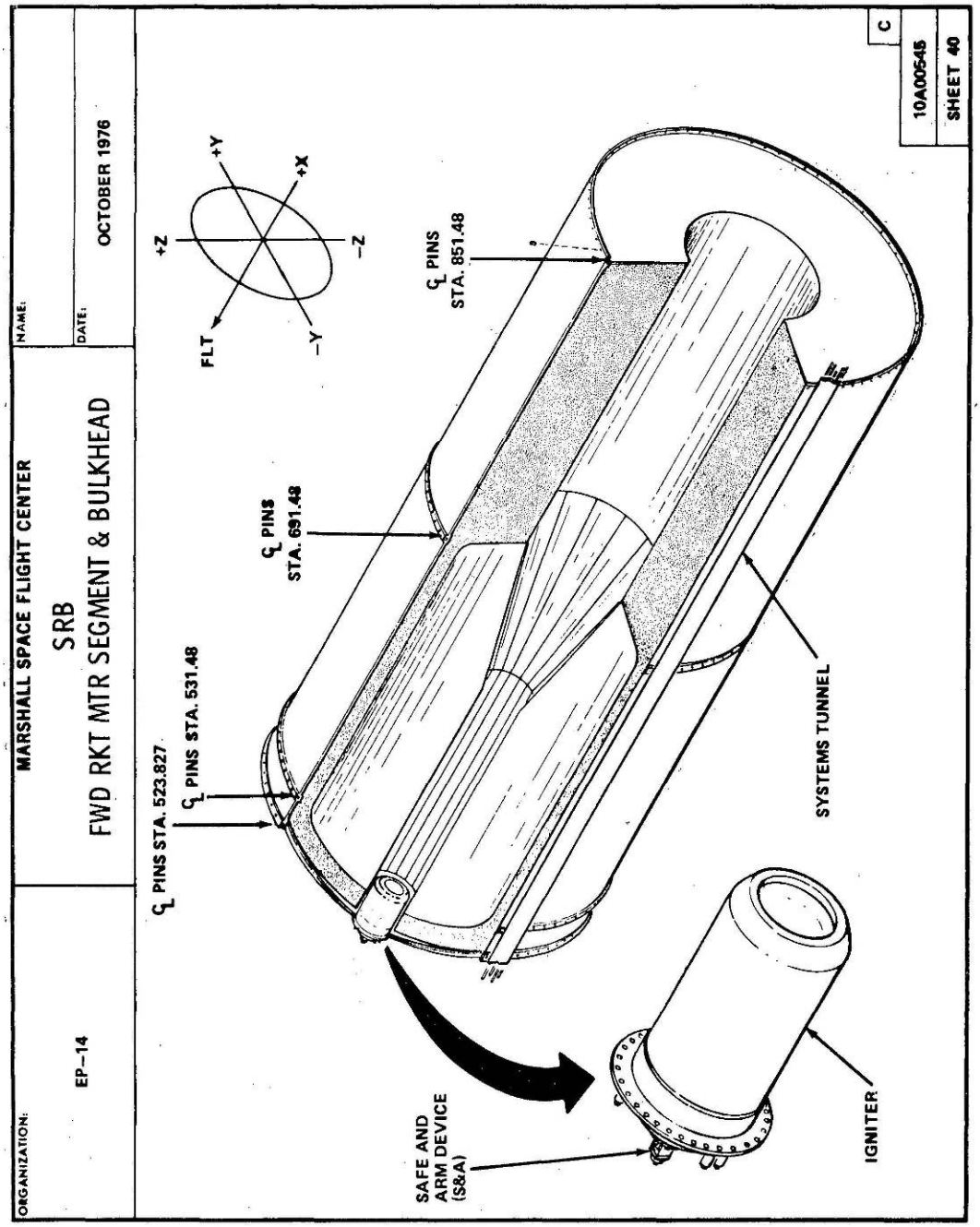

Figure No. E-21. Diagram of SRB forward motor segment.
Source: Griner, et al., *Space Shuttle Solid Rocket Booster Pictorial Representations*, sheet 40.

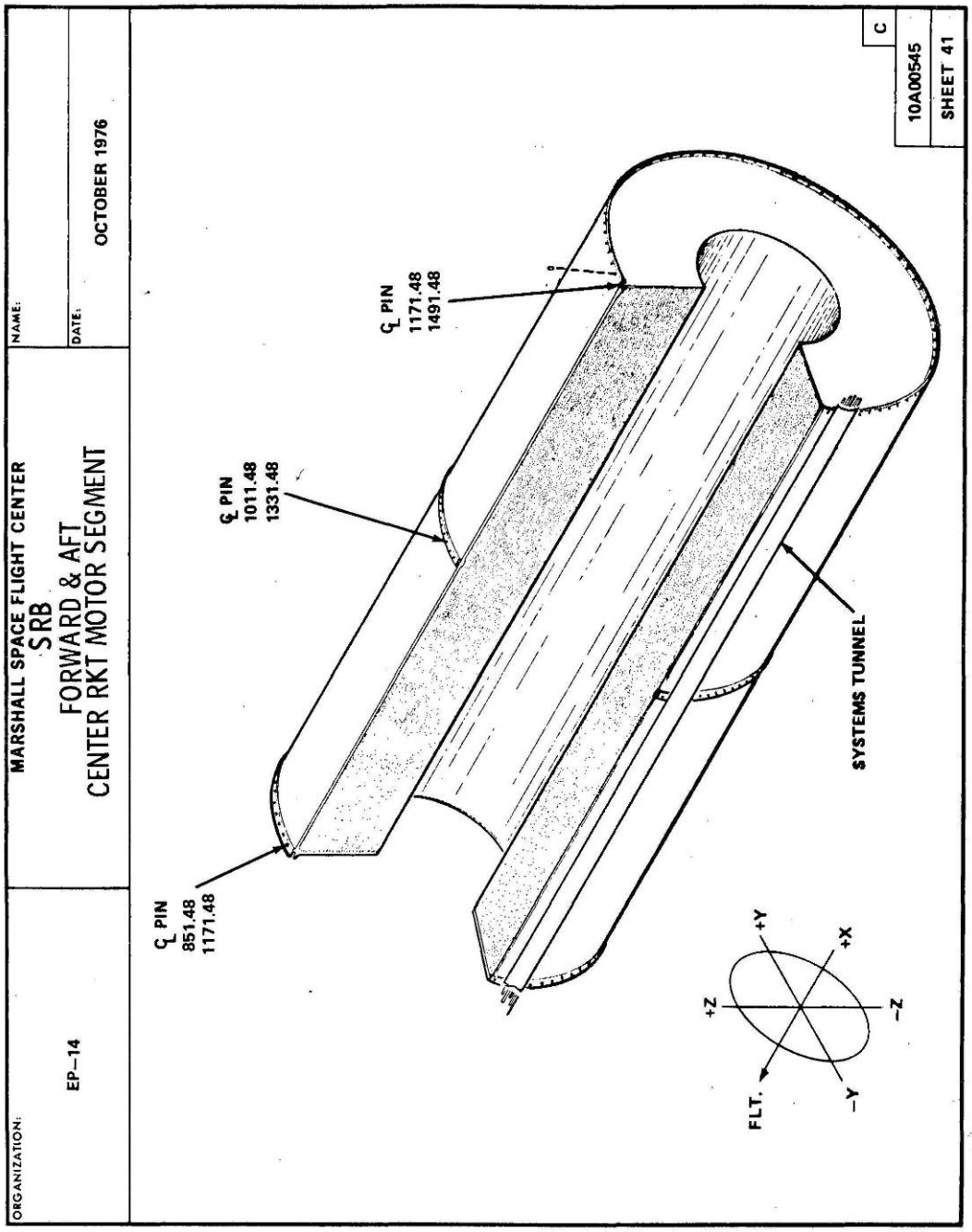

Figure No. E-22. Diagram of SRB center motor segments.
Source: Griner, et al., *Space Shuttle Solid Rocket Booster Pictorial Representations*, sheet 41.

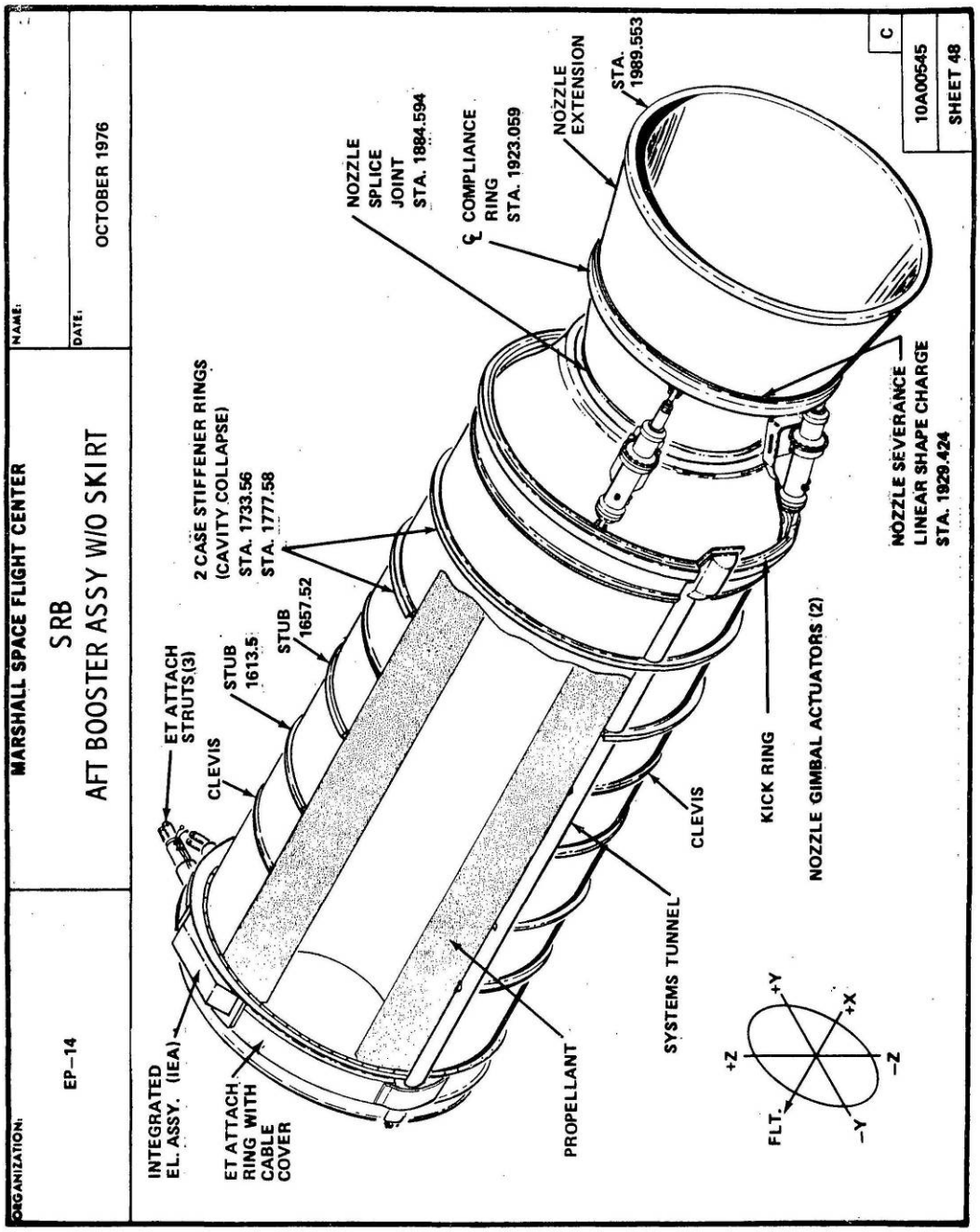

Figure No. E-23. Diagram of SRB aft booster assembly without skirt.
Source: Griner, et al., *Space Shuttle Solid Rocket Booster Pictorial Representations*, sheet 48.

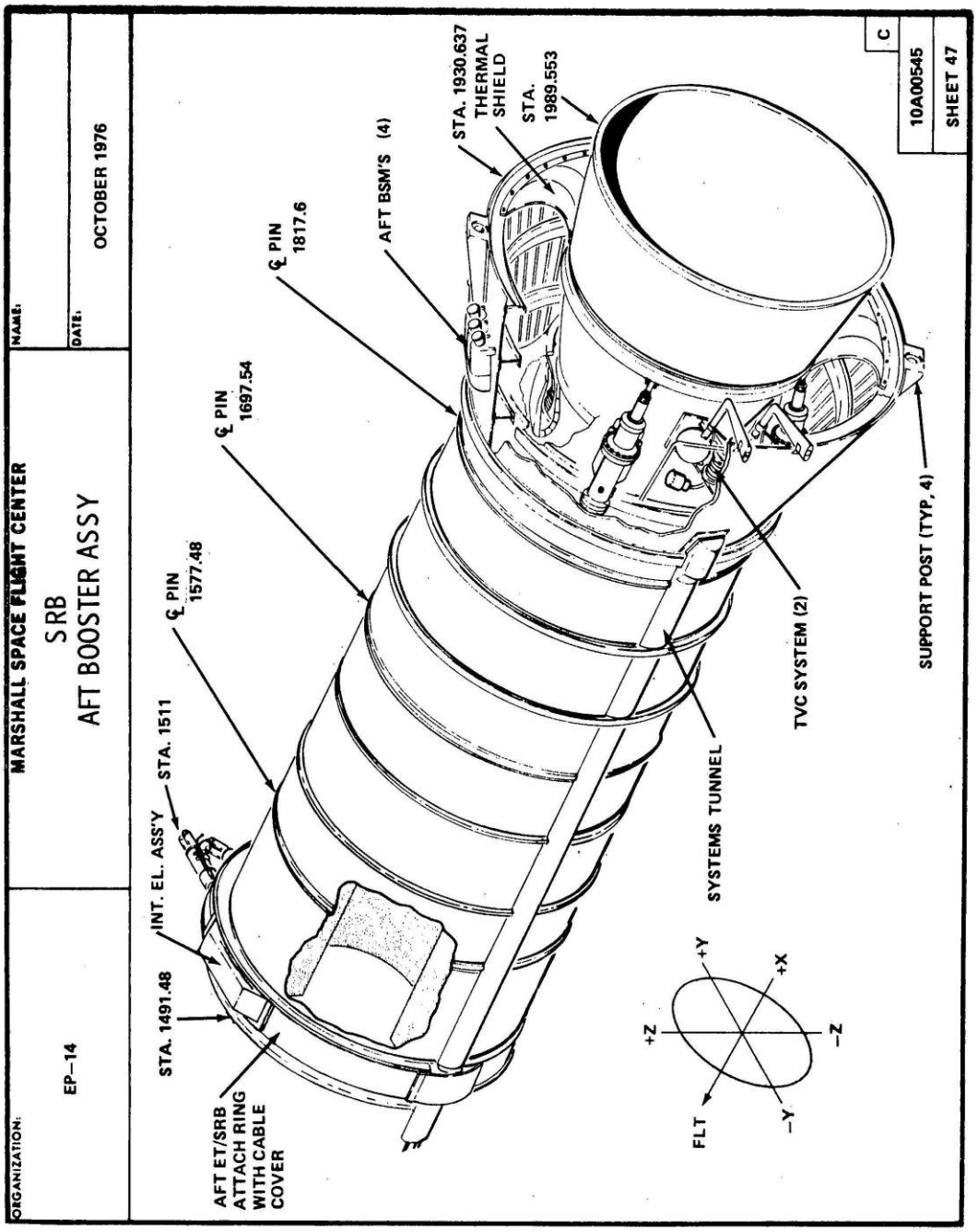

Figure No. E-24. Diagram of SRB aft booster assembly with skirt.
Source: Griner, et al., *Space Shuttle Solid Rocket Booster Pictorial Representations*, sheet 47.

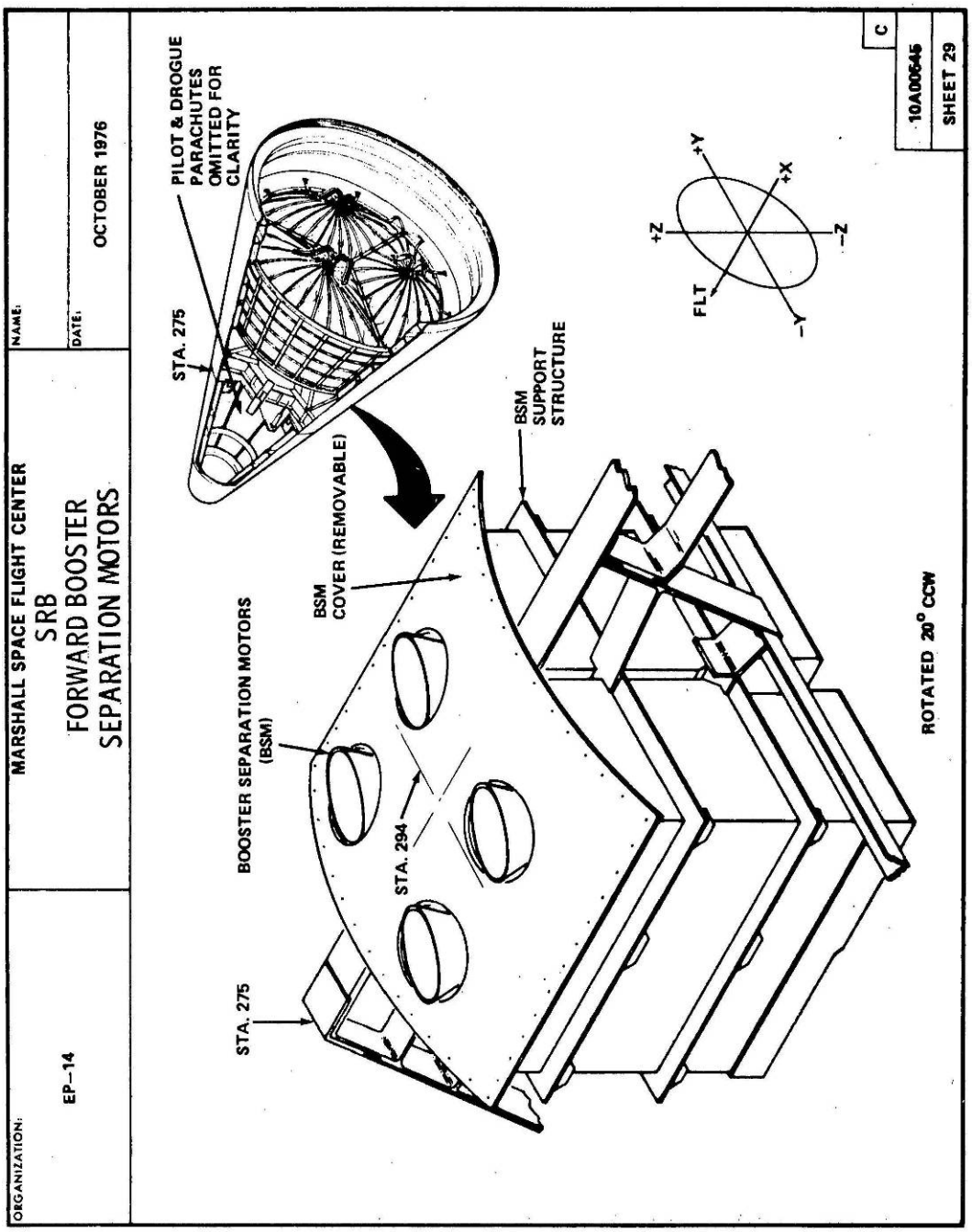

Figure No. E-25. Diagram of SRB forward booster separation motors.
Source: Griner, et al., *Space Shuttle Solid Rocket Booster Pictorial Representations*, sheet 29.

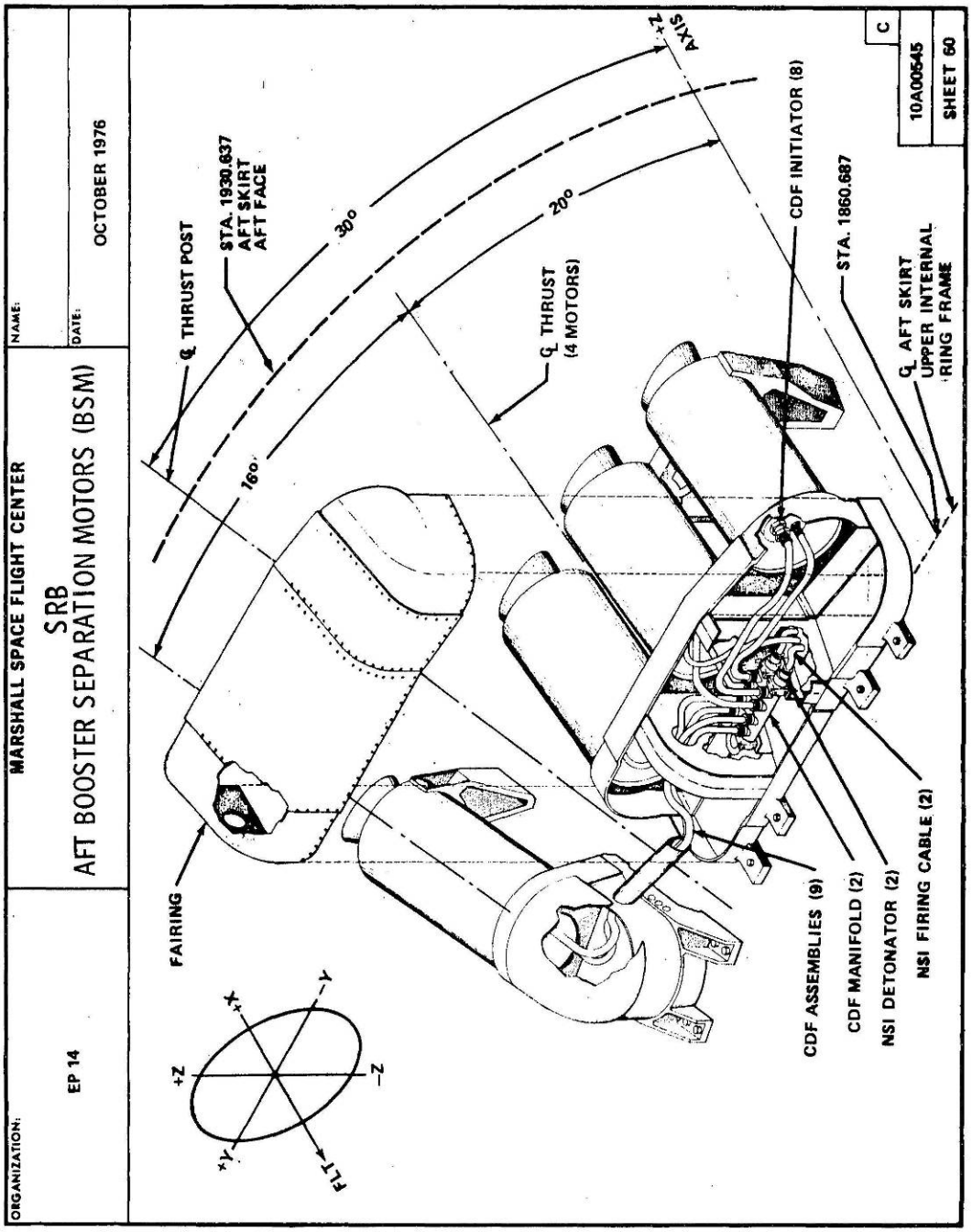

Figure No. E-26. Diagram of SRB aft booster separation motors.
Source: Griner, et al., *Space Shuttle Solid Rocket Booster Pictorial Representations*, sheet 60.

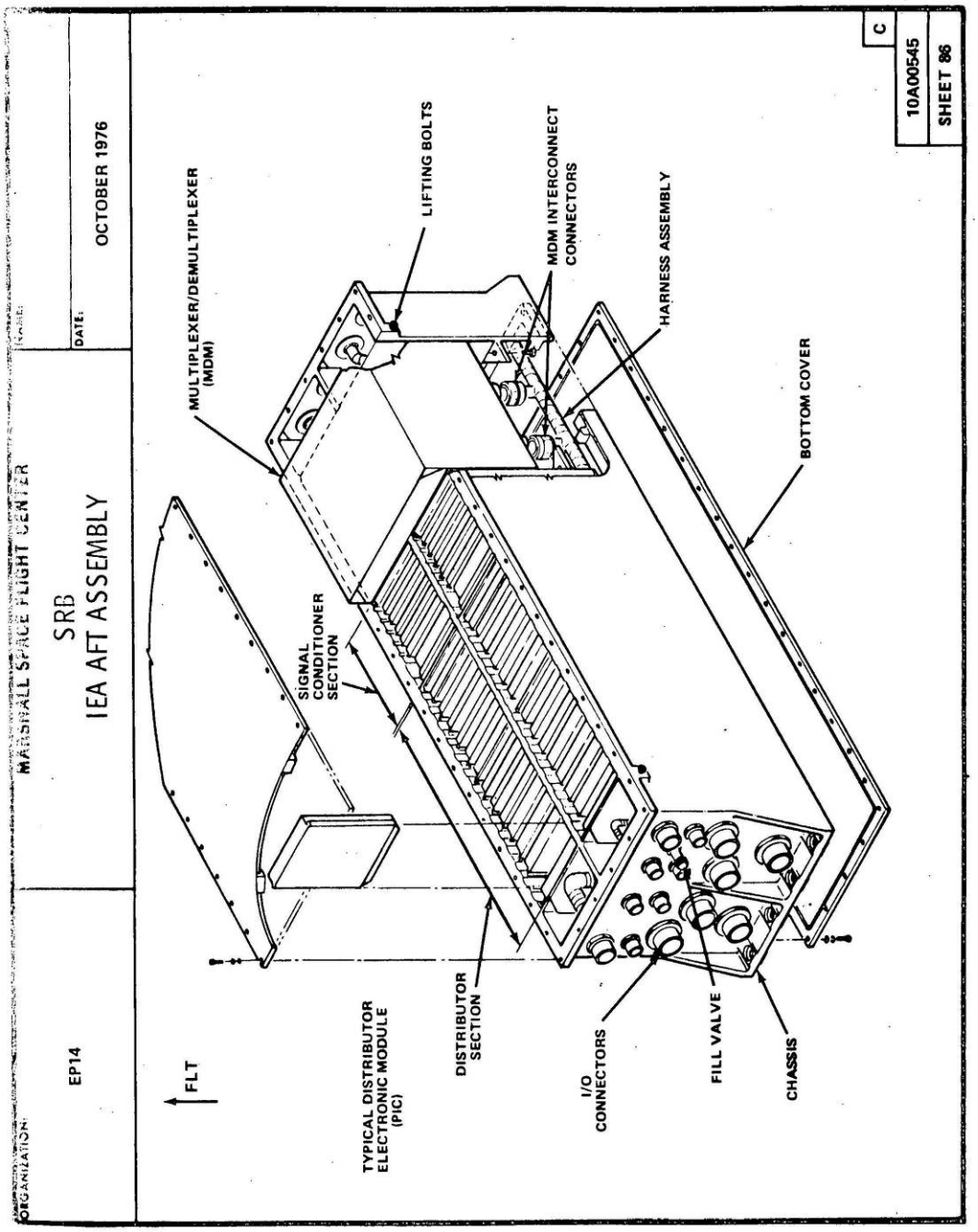

Figure No. E-27. SRB Integrated Electronic Assembly (IEA).
Source: Griner, et al., *Space Shuttle Solid Rocket Booster Pictorial Representations*, sheet 86.

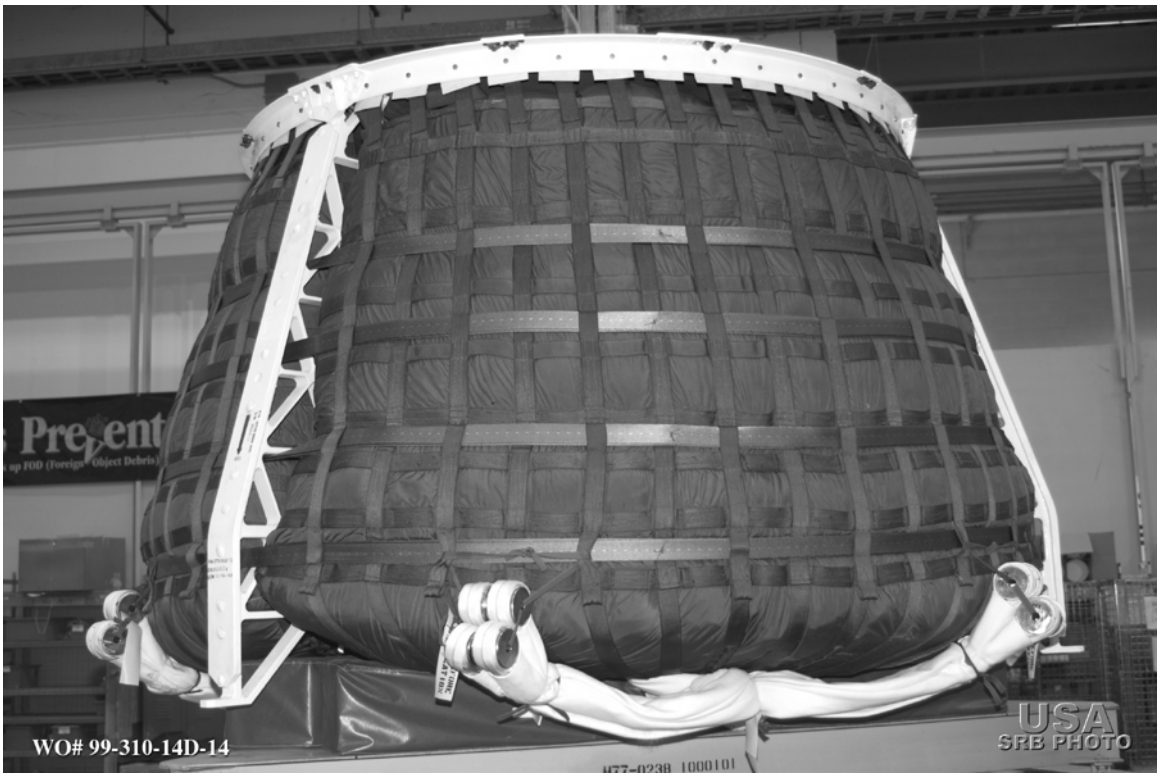

Figure No. E-28. SRB Parachute Assembly.
Source: USA, WO# 99-310-14D-14

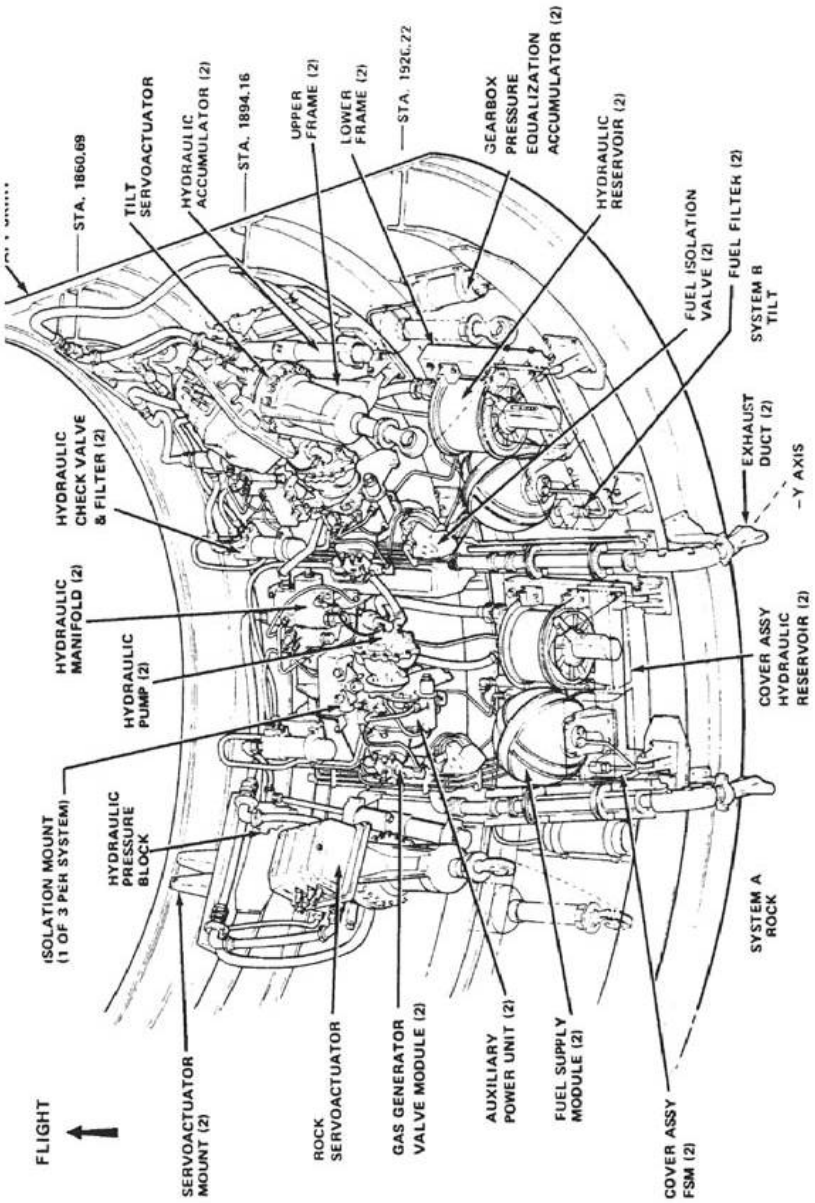

Figure No. E-29. Diagram of SRB thrust vector control subsystem.
Source: USA. *Solid Rocket Booster Illustrated Systems Manual*, 62.

Figure No. E-30. Separation of the SRBs from the Shuttle Columbia, T+2:11, April 12, 1981. Source: NASA Kennedy Space Center, KSC-81PC-0272, accessed at http://mediaarchive.ksc.nasa.gov.

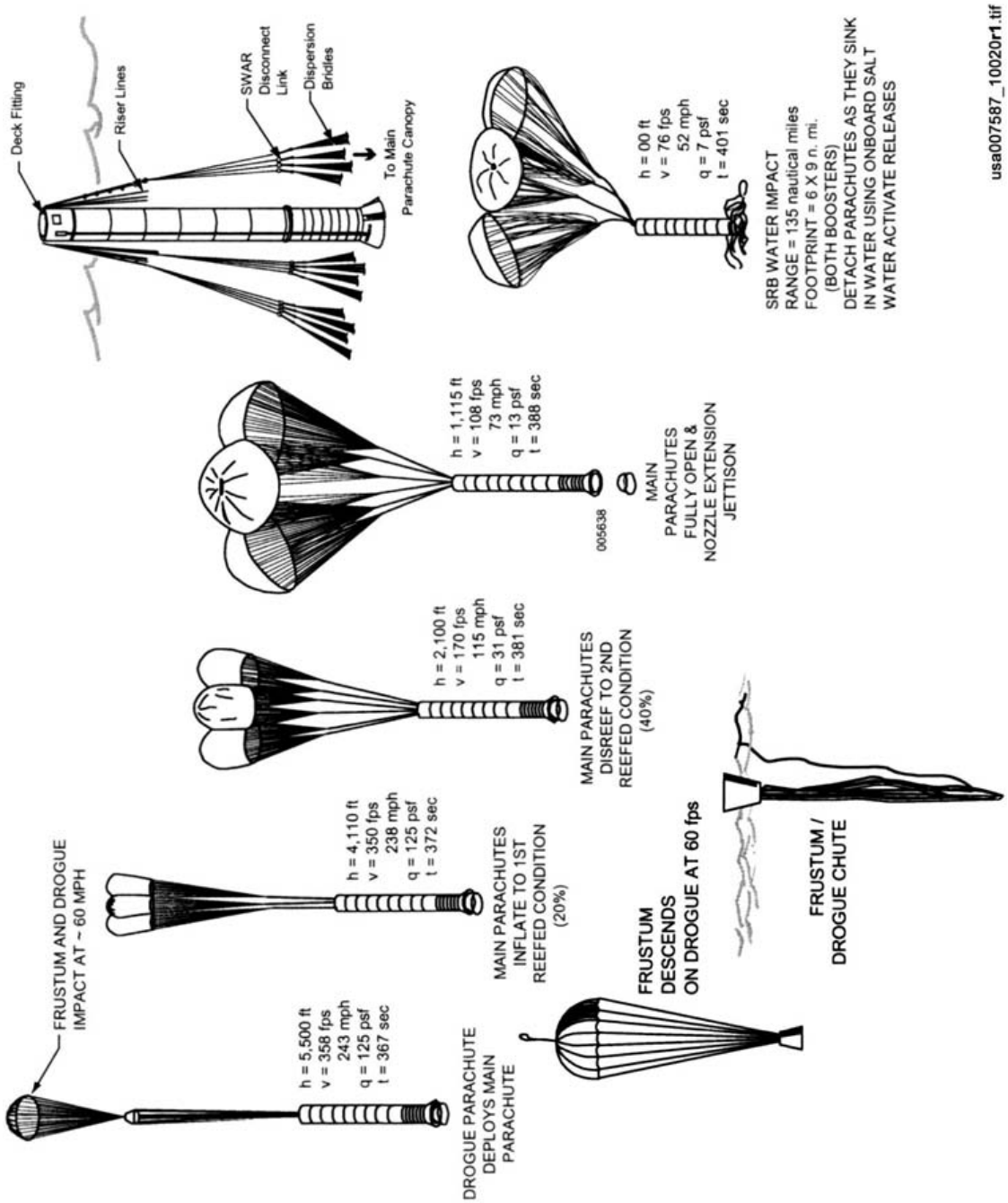

Figure No. E-31. Diagram of SRB Recovery, from main deploy of parachutes through disconnect.
Source: USA, *Shuttle Crew Operation Manual*, 1.4-10.

Figure No. E-32. Right and left SRBs in Atlantic Ocean after jettison on December 9 (*Discovery*, STS-116), December 10, 2006.
Source: NASA Kennedy Space Center, KSC-06PD-2794, accessed at http://mediaarchive.ksc.nasa.gov.

Figure No. E-33. SRB retrieval ship, *Freedom Star*, towing spent SRB from the STS-114 launch, July 27, 2005.
Source: NASA Kennedy Space Center, KSC-05PD-1791, accessed at http://mediaarchive.ksc.nasa.gov.

Figure No. E-34. Recovered SRB arrives at Hangar AF Slip.
Source: USA, WO# 02-328-02D-13

Figure No. E-35. Crane lifts SRB used during *Atlantis'* STS-132 launch onto a tracked dolly at Hangar AF Disassembly Facility, May 18, 2010.
Source: NASA Kennedy Space Center, KSC-2010-3480, accessed at http://mediaarchive.ksc.nasa.gov.

Figure No. E-36. The frustum of a SRB used during *Discovery's* launch on mission STS-119 is lifted onto a transporter at the Hangar AF dock, March 18, 2009.
Source: NASA Kennedy Space Center, KSC-2009-2140, accessed at http://mediaarchive.ksc.nasa.gov.

Figure No. E-37. Forward skirt in Hangar AF Robot Wash Building, interior looking south.
Source: Archaeological Consultants, Inc., 2006.

Figure No. E-38. Empty RSRM segments en route to Utah following STS-122, March 5, 2008. Source: NASA Kennedy Space Center, KSC-08PD-0630, accessed at http://mediaarchive.ksc.nasa.gov.

Figure No. E-39. The first solid rocket booster solid motor segments (left and right aft segments) to arrive at KSC, February 2, 1980.
Source: NASA Ames Research Center, AC80-0107-3, accessed at http://nix.ksc.nasa.gov/.

Figure No. E-40. Loaded RSRM segments and two aft exit cone segments en route to the RPSF, May 14, 2007.
Source: NASA Kennedy Space Center, KSC-07PD-1170, accessed at http://mediaarchive.ksc.nasa.gov.

Figure No. E-41. SRB segment being lifted and rotated, 2004.
Source: NASA John F. Kennedy Space Center, KSC-04PD-0058, accessed at http://mediaarchive.ksc.nasa.gov/search.cfm.

Figure No. E-42. Parachute from *Endeavour's* STS-126 mission is unreeled at the Parachute Refurbishment Facility, November 19, 2008.
Source: NASA Kennedy Space Center, KSC-08PD-3748, accessed at http://mediaarchive.ksc.nasa.gov.

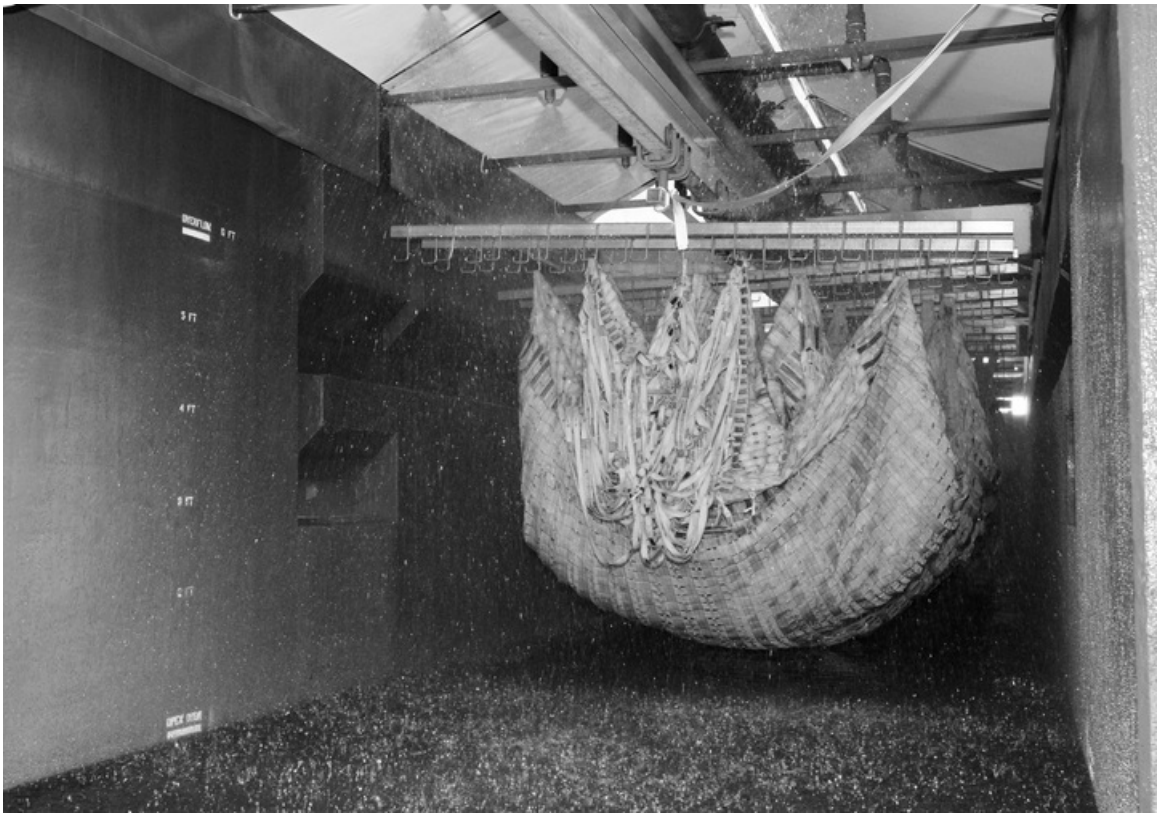

Figure No. E-43. Parachute from *Endeavour's* STS-126 mission is moved through the 30,000 gallon washer, November 19, 2008.
Source: NASA Kennedy Space Center, KSC-08PD-3747, accessed at http://mediaarchive.ksc.nasa.gov.

Figure No. E-44. Parachute from *Endeavour's* STS-126 mission is suspended from a hanging monorail system at the KSC Parachute Refurbishment Facility, November 19, 2008. Source: NASA Kennedy Space Center, KSC-08PD-3740, accessed at http://mediaarchive.ksc.nasa.gov.

Figure No. E-45. Parachute Refurbishment Facility, packing area.
Source: Archaeological Consultants, Inc., 2006.

Figure No. E-46. SRB forward skirt in the SRB ARF cure area.
Source: Archaeological Consultants, Inc., 2006.

Figure No. E-47. The right aft booster, comprised of the aft skirt and aft motor segment, rolls out of a Surge Building at the RPSF for transfer to the VAB, where it will be stacked for *Discovery*, STS-121, January 23, 2006.
Source: NASA Kennedy Space Center, KSC-06PD-0108, accessed at http://mediaarchive.ksc.nasa.gov.

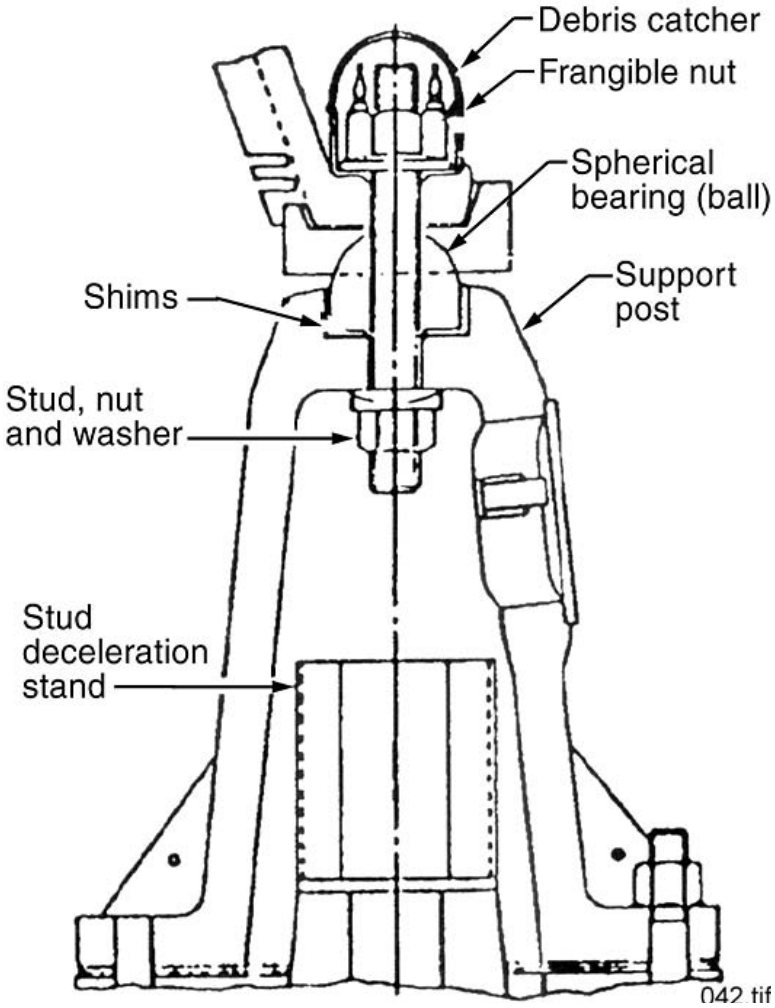

Figure No. E-48. Diagram of SRB Support/Hold-Down Post.
Source: USA, *Shuttle Crew Operation Manual*, 1.4-3.

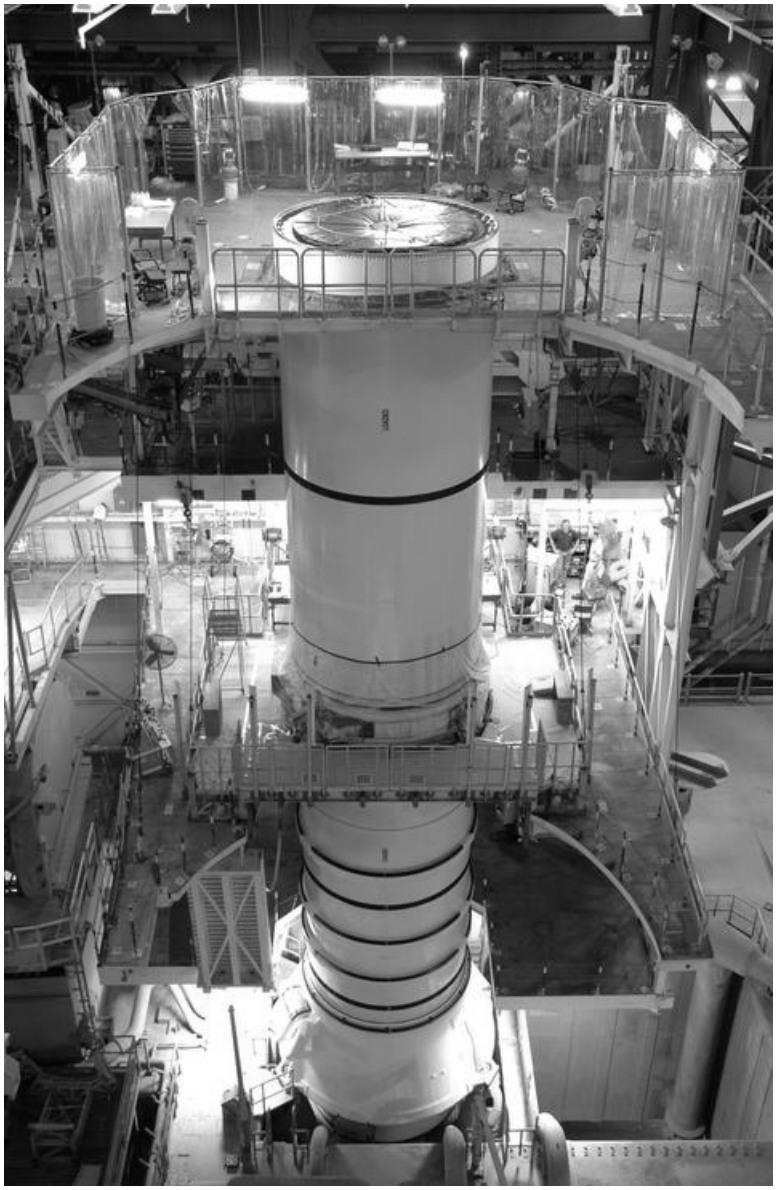

Figure No. E-49. A SRB left aft booster and left aft center segments are stacked in the VAB for STS-120, July 23, 2007.
Source: NASA Kennedy Space Center, KSC-07PD-2087, accessed at http://mediaarchive.ksc.nasa.gov.

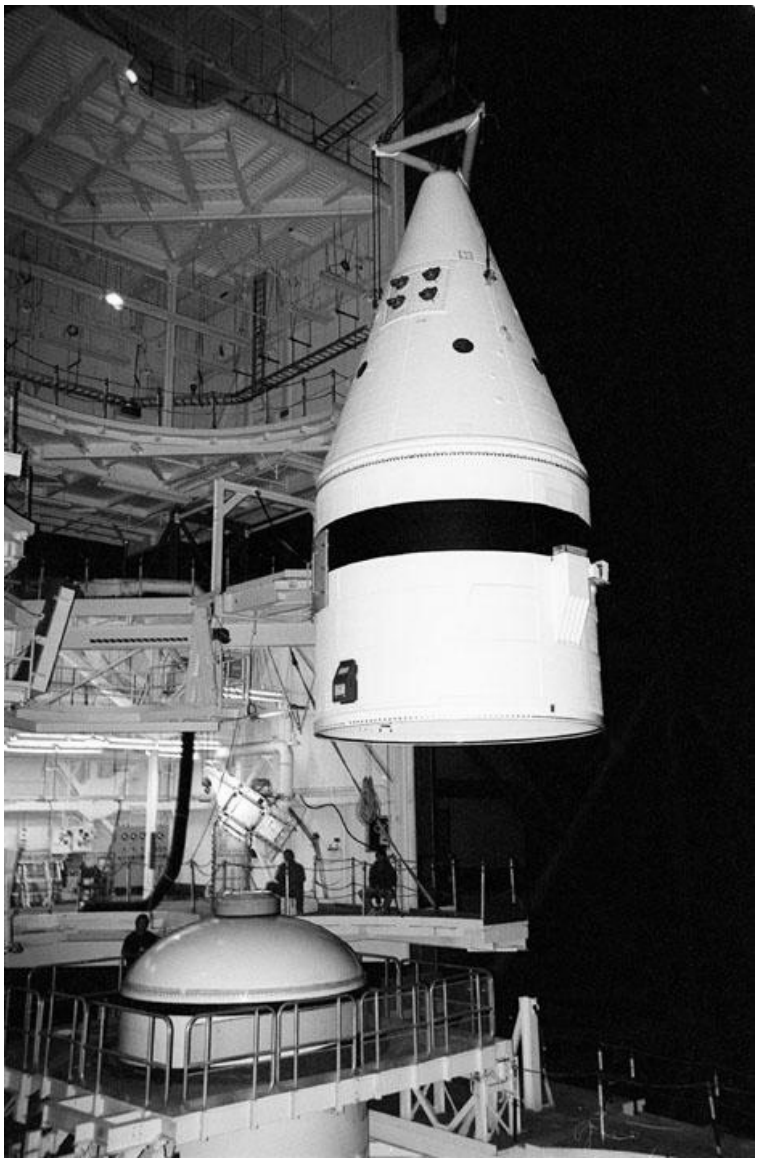

Figure No. E-50. A forward assembly is lifted in the VAB prior to stacking for STS-92, June 29, 2000.
Source: NASA Kennedy Space Center, KSC-00PP-0853, accessed at http://mediaarchive.ksc.nasa.gov.